ENGINEERING DESIGN STANDARDS FOR BID PACKAGE 4 – CIVIL WORKS

RFB 6000000898

C-43 WEST BASIN STORAGE RESERVOIR DESIGN UPDATE

CORRECTED FINAL/RTA

HENDRY COUNTY, FLORIDA

PROJECT ID#: 100088

TECHNICAL SPECIFICATIONS

Volume 2

(Division 1, Section 01 45 00.00 10 Appendix B – Division 7)

– This page intentionally left blank –

TABLE OF CONTENTS

VOLUME 1

DIVISION 0 - PROCURMENT AND CONTRACTING REQUIREMENTS		RESPONSIBLE ENGINEER
00 00 00	SFWMD FRONT ENDS (INCLUDES SECTION 00700 - GENERAL TERMS AND CONDITIONS)	
00 31 46	PERMITS AND FEES	Michael Penn, P.E.
00 71 02	DEFINITIONS AND STANDARDS	C.T. Reinbold, P.E.
DIVISION 01 - GENERAL REQUIREMENTS		
01 11 00	SUMMARY OF WORK	C.T. Reinbold, P.E.
01 22 02	MEASUREMENT AND PAYMENT	Kevin Aubry, P.E.
01 25 02	PRODUCT OPTIONS AND SUBSTITUTIONS	C.T. Reinbold, P.E.
01 32 16	COST LOADED CONSTRUCTION SCHEDULES	C.T. Reinbold, P.E.
01 32 34	CONSTRUCTION VIDEO AND PHOTOGRAPHS	C.T. Reinbold, P.E.
01 33 00	SUBMITTAL PROCEDURES	C.T. Reinbold, P.E.
01 34 19	PROJECT MEETINGS AND REPORTS	C.T. Reinbold, P.E.
01 35 26	SAFETY REQUIREMENTS	C.T. Reinbold, P.E.
01 35 40	ENVIRONMENTAL PROTECTION	Michael Penn, P.E.
01 35 44	MANATEE PROTECTION	Michael Penn, P.E.
01 42 00	SOURCES FOR REFERENCE PUBLICATIONS	C.T. Reinbold, P.E.
01 45 00.00 10	QUALITY CONTROL, Appendix A	C.T. Reinbold, P.E.

VOLUME 2

01 45 00.00 10	QUALITY CONTROL, Appendix B-D	C.T. Reinbold, P.E.
01 45 04	CONTRACTOR QUALITY MANAGEMENT SYSTEM	C.T. Reinbold, P.E.
01 45 08	GEOGRAPHIC INFORMATION SYSTEM DATA REQUIREMENTS - QUALITY CONTROL AND QUALITY ASSURANCE DATA	Kevin Aubry, P.E.
01 51 05	TEMPORARY UTILITIES AND FACILITIES	Michael Penn, P.E.
01 52 13	FIELD OFFICES AND SHEDS	Michael Penn, P.E.
01 53 00	TEMPORARY CONSTRUCTION	Michael Penn, P.E.
01 55 26	TRAFFIC CONTROL	Michael Penn, P.E.
01 56 05	TEMPORARY BARRIERS AND CONTROLS	Michael Penn, P.E.
01 58 13	TEMPORARY PROJECT SIGNAGE	Michael Penn, P.E.
01 61 03	EQUIPMENT AND MATERIALS	C.T. Reinbold, P.E.
01 61 07	EQUIPMENT ALIGNMENT	C.T. Reinbold, P.E.
01 71 23	FIELD ENGINEERING AND SURVEYING	Michael Penn, P.E.
01 73 29	CUTTING AND PATCHING	Michael Penn, P.E.
01 75 15	START UP/CHECK OUT/MANUFACTURER'S FIELD SERVICES FOR OWNER FURNISHED EQUIPMENT	C.T. Reinbold, P.E.
01 75 16	START UP/CHECK OUT/MANUFACTURER'S FIELD SERVICES FOR CONTRACTOR FURNISHED EQUIPMENT	C.T. Reinbold, P.E.
01 77 10	CONTRACT CLOSEOUT	C.T. Reinbold, P.E.
01 78 05	OPERATION AND MAINTENANCE INFORMATION	C.T. Reinbold, P.E.
01 87 02	EQUIPMENT AND SYSTEM PERFORMANCE AND OPERATIONAL TESTING	C.T. Reinbold, P.E.
01 91 00	COMMISSIONING	C.T. Reinbold, P.E.
01 91 10	TRAINING	C.T. Reinbold, P.E.
DIVISION 02 - EXISTING CONDITIONS		
02 33 00	STANDARD PENETRATION TEST	Kevin Aubry, P.E.
02 41 00	DEMOLITION	Michael Penn, P.E.

DIVISION 03 - CONCRETE

03 11 15.00 10	CONCRETE FORMWORK AND ACCESSORIES	Eric Huskey, P.E.
03 20 00.00 10	CONCRETE REINFORCEMENT	Eric Huskey, P.E.
03 31 01.00 10	CAST-IN-PLACE STRUCTURAL CONCRETE FOR CIVIL WORKS	Eric Huskey, P.E.
03 31 27	CONCRETE ADMIXTURE WATERPROOFING	Joel Smason, P.E.
03 35 00.00 10	CONCRETE FINISHING	Eric Huskey, P.E.
03 39 00.00 10	CONCRETE CURING	Eric Huskey, P.E.
03 41 32.00	STRUCTURAL PRECAST CONCRETE FOR ABOVE GRADE	Joel Smason, P.E.

DIVISION 04 - MASONRY

04 20 00	UNIT MASONRY	Joel Smason, P.E.

DIVISION 05 - METALS

05 05 23.16	STRUCTURAL WELDING	Joel Smason, P.E.
05 12 00	STRUCTURAL STEEL	Joel Smason, P.E.
05 50 14	STRUCTURAL METAL FABRICATIONS	Joel Smason, P.E.
05 50 15	CIVIL WORKS FABRICATIONS	Joel Smason, P.E.

DIVISION 07 - THERMAL AND MOISTURE PROTECTION

07 61 13	STANDING SEAM SHEET METAL ROOFING	Michael Penn, P.E.
07 92 00	JOINT SEALANTS	Joel Smason, P.E.

VOLUME 3

DIVISION 08 - OPENINGS

08 11 13	STEEL DOORS AND FRAMES	Joel Smason, P.E.
08 71 00	DOOR HARDWARE	Joel Smason, P.E.
08 91 00	METAL WALL LOUVERS	Chad Green, P.E.

DIVISION 09 - FINISHES

09 06 90	PROTECTIVE COATINGS	Joel Smason, P.E.

DIVISION 10 - SPECIALTIES

10 14 00.10	EXTERIOR SIGNAGE	Michael Penn, P.E.
10 14 00.20	INTERIOR SIGNAGE	Joel Smason, P.E.
10 18 00	INFORMATIONAL KIOSK	Michael Penn, P.E.
10 21 12	PRECAST RESTROOM TOILET	Michael Penn, P.E.
10 44 16	FIRE EXTINGUISHERS	Joel Smason, P.E.

DIVISION 13 - SPECIAL CONSTRUCTION

13 34 23.10	PRECAST CONCRETE BUILDINGS	Joel Smason, P.E.

DIVISION 23 - HEATING, VENTILATING, AND AIR CONDITIONING (HVAC)

23 00 00	AIR SUPPLY, DISTRIBUTION, VENTILATION, AND EXHAUST SYSTEMS	Chad Green, P.E.
23 03 00.00 20	BASIC MECHANICAL MATERIALS AND METHODS	Chad Green, P.E.
23 05 48.00 40	VIBRATION AND SEISMIC CONTROLS FOR HVAC PIPING AND EQUIPMENT	Chad Green, P.E.
23 05 93	TESTING, ADJUSTING, AND BALANCING FOR HVAC	Chad Green, P.E.
23 09 13	INSTRUMENTATION AND CONTROL DEVICES FOR HVAC	Chad Green, P.E.

DIVISION 26 - ELECTRICAL

26 00 00.00 20	BASIC ELECTRICAL MATERIALS AND METHODS	Larry Smith, P.E.

26	05	19.10 10	INSULATED WIRE AND CABLE	Larry Smith, P.E.
26	05	71.00 40	LOW VOLTAGE OVERCURRENT PROTECTIVE DEVICES	Larry Smith, P.E.
26	08	50	FIELD TESTING	Larry Smith, P.E.
26	14	00	LPG FUEL TANK MONITORING SYSTEM	Larry Smith, P.E.
26	20	00	INTERIOR DISTRIBUTION SYSTEM	Larry Smith, P.E.
26	28	01.00.10	COORDINATED POWER SYSTEM PROTECTION	Larry Smith, P.E.
26	28	21.00 40	AUTOMATIC TRANSFER SWITCHES	Larry Smith, P.E.
26	32	15	LPG FUEL SYSTEM FOR EMERGENCY GENERATOR	Chad Green, P.E.
26	36	14	PROPANE FUELED GENERATOR	Larry Smith, P.E.
26	41	00	LIGHTNING PROTECTION SYSTEM	Larry Smith, P.E.
26	42	14.00 10	CATHODIC PROTECTION SYSTEM (SACRIFICIAL ANODE)	Larry Smith, P.E.
26	51	00.00 40	INTERIOR LIGHTING	Larry Smith, P.E.
26	56	00	EXTERIOR LIGHTING	Larry Smith, P.E.
26	60	13.00 40	LOW VOLTAGE MOTORS	Larry Smith, P.E.

DIVISION 27 - COMMUNICATIONS

27	05	13.00 10	TWO-WAY RADIO DATA TRANSMISSION SYSTEMS	Larry Smith, P.E.

DIVISION 31 - EARTHWORK

31	00	00	EARTHWORK - EARTH DAM	Kevin Aubry, P.E.
31	05	19	GEOTEXTILE	Michael Penn, P.E.
31	09	00	GEOTECHNICAL INSTRUMENTATION AND MONITORING OF EARTHWORK	Kevin Aubry, P.E.
31	11	00	CLEARING AND GRUBBING	Michael Penn, P.E.
31	23	13	SUBGRADE PREPARATION	Kevin Aubry, P.E.
31	23	23	EXCAVATABLE FLOWABLE FILL	Joel Smason, P.E.
31	25	13	SLOPE PROTECTION WITH SOIL-CEMENT	Kevin Aubry, P.E.
31	32	11	SOIL SURFACE EROSION CONTROL	Michael Penn, P.E.
31	41	16	SHEET PILING	Joel Smason, P.E.
31	52	10	DEWATERING AND COFFERDAM	Kevin Aubry, P.E.
31	56	13.13	SOIL BENTONITE SLURRY WALL	Kevin Aubry, P.E.
31	62	13.20	PRECAST/PRESTRESSED CONCRETE PILES	Joel Smason, P.E.
31	62	19	TIMBER PILES	Michael Penn, P.E.

DIVISION 32 - EXTERIOR IMPROVEMENTS

32	11	23.10	LIMEROCK BASE	Michael Penn, P.E.
32	11	39	SHELL BASE COURSE	Michael Penn, P.E.
32	12	13	BITUMINOUS TACK AND PRIME COATS	Michael Penn, P.E.
32	12	16	HOT-MIX-ASPHALT (HMA) FOR ROADS	Michael Penn, P.E.
32	16	23	CONCRETE SIDEWALKS, CURBS AND GUTTERS, RAMPS, MISCELLANEOUS SLABS AND WHEEL STOPS	Michael Penn, P.E.
32	17	23	PAVEMENT MARKINGS	Michael Penn, P.E.
32	31	13	CHAIN LINK FENCES AND GATES	Michael Penn, P.E.
32	31	26	WIRE FENCES AND GATES	Michael Penn, P.E.
32	31	29	WOOD FENCES AND GATES	Michael Penn, P.E.
32	31	53	CATTLE GUARD	Michael Penn, P.E.
32	90	00	PLANTING	Michael Penn, P.E.
32	92	19	SEEDING	Michael Penn, P.E.
32	92	23	SODDING	Michael Penn, P.E.

DIVISION 33 - UTILITIES

33	03	00	TURBIDITY CONTROL AND MONITORING	Michael Penn, P.E.
33	11	53	MONITORING WELLS	Kevin Aubry, P.E.
33	30	20	STAFF GAUGES	C.T. Reinbold, P.E.
33	40	00	STORM DRAINAGE UTILITIES	Michael Penn, P.E.
33	42	14	CORRUGATED ALUMINUM-ALLOY PIPE AND RISER	C.T. Reinbold, P.E.
33	46	13	FOUNDATION DRAINAGE SYSTEM	Kevin Aubry, P.E.
33	71	02	UNDERGROUND ELECTRICAL DISTRIBUTION	Larry Smith, P.E.

DIVISION 35 - WATERWAY AND MARINE CONSTRUCTION

35	01	70.13	WIRE ROPE FOR GATE OPERATING DEVICES	C.T. Reinbold, P.E.
35	20	14	BULKHEADS AND STOPLOGS	C.T. Reinbold, P.E.
35	20	16.53	ROLLER GATES	C.T. Reinbold, P.E.
35	20	16.54	SLIDE GATES	C.T. Reinbold, P.E.
35	20	20	ELECTRICAL EQUIPMENT FOR GATE HOIST	Larry Smith, P.E.
35	22	55	VERTICAL LIFT GATE OPERATING SYSTEMS	C.T. Reinbold, P.E.
35	31	18	MARINE MATTRESS	Michael Penn, P.E.
35	31	19	RIPRAP SYSTEM	Michael Penn, P.E.
35	31	19.20	ARTICULATING CONCRETE BLOCK REVETMENTS	Michael Penn, P.E.
35	41	21	PRESSURE RELIEF SYSTEM	Kevin Aubry, P.E.
35	42	34	REINFORCED SOIL SLOPE	Michael Penn, P.E.
35	45	02	VERTICAL AXIAL FLOW PUMPS - ELECTRIC MOTOR/BELT DRIVEN	M. N. Ludwigson, P.E.
35	51	24	FLOATING TRASH BARRIER - TUFFBOOM	Michael Penn, P.E.

DIVISION 40 - PROCESS INTEGRATION

40	05	13	PIPELINES, LIQUID PROCESS PIPING	C.T. Reinbold, P.E.
40	05	13.96	WELDING PROCESS PIPING	C.T. Reinbold, P.E.
40	05	22	DISCHARGE PIPE	C.T. Reinbold, P.E.
40	05	57.23	ELECTRIC ACTUATORS	C.T. Reinbold, P.E.
40	17	30.00 40	WELDING GENERAL PIPING	C.T. Reinbold, P.E.
40	61	14	GENERAL PROVISIONS FOR MECHANICAL WORK	C.T. Reinbold, P.E.
40	95	00	PROCESS CONTROL	Larry Smith, P.E.

-- End of Project Table of Contents --

Appendix B

– This page intentionally left blank –

INSPECTION / TEST PLAN (ITP)
C-43 WEST BASIN STORAGE RESERVOIR
CONTRACT NUMBER: CN XXXXXXXXXX
CIVIL WORKS

Location: Hendry County, FL
Date Prepared:
Revision:
Contractor: **Prepared By:**

DEMOLITION
Spec. Section: 02 41 00

Item No.	Attribute / Activity Description	Acceptance Criteria (Codes, Std., Spec., Drawings, Etc.)	INSPECTION REQUIREMENTS			Forms / Records / References (3)	Comments
			Inspect	Hold (1)	Notify (2)		
1.1	Contractor's Quality Control Plan, Site Health & Safety Plan and Permits	Quality Control 01 45 00, Safety Requirements 01 35 26, Permits & Fees 00 31 46	D-L4	D-L4		Plans and Permits	Plans have been submitted by Contractor and approved by the District/PQACT. All pemits have been obtained to begin work.
1.2	Preconstruction Submittals	Submittals 01 33 00 02 41 00	D-L4, ER-L4	D-L4, ER-L4		Transmittal 01 45 00.3.10.1. & Appen. C, Submittals 01 45 00.3.10.1. & Appen. C, Submittal Register	All preconstruction submittals for this DFOW shall be submitted by the Contractor and Approved by the District/PQACT.
1.3	Request For Information (RFIs)	Quality Control 01 45 00	D-L4, ER-L4	D-L4, ER-L4		Request for Information & Log 01 45 00.3.10.1 & Appen. C	All RFIs for this DFOW shall be answered in order to clear up any questions before work begins.
1.4	Work Plans	Quality Control 01 45 00	D-L4, ER-L4	D-L4, ER-L4		Plans	All work plans for this DFOW shall be submitted by the Contractor and approved by the District/PQACT.
1.5	Activity Hazard Analysis (AHA)	Safety Requirements 01 35 26	D-L4, ER-L4	D-L4, ER-L4		AHA 01 45 00.3.10.1 & Appen. C	The AHA for this DFOW have been submitted by the Contractor.
1.6	Previous Work Deficiencies & Non-Conformances of previous DFOW	Quality Control 01 45 00	CQC-L5, SDQC-L5, D-L5, ER-L5, MCT-L5	D-L4, ER-L4		Deficiency Logs and NCN Logs 01 45 00.3.10.1 & Appen. C	All deficiencies and non-conformances shall be corrected of previous work in order to avoid covering deficiencies.
1.7	Final Follow-up Control Phase Inspection of previous DFOW	Quality Control 01 45 00	CQC-L5, SDQC-L5, D-L5, ER-L5, MCT-L5	D-L4, ER-L4	48 Hours	Final Follow-up Control Phase Inspection Checklist & Punch-Out	Final Follow-up Control Phase Inspection checklist & punch out items shall be completed of previous work.
1.8	Preparatory Control Phase Inspection	Quality Control 01 45 00	CQC-L5, SDQC-L5, D-L5, ER-L5, MCT-L5	D-L4, ER-L4	48 Hours	Preparatory Control Phase Inspection Worksheet 01 45 00.3.10.1 & Appen. C	Preparatory Control Phase Inspection/Meeing shall be performed successfully without open issues.
1.9	Authorization to begin demolition	Demolition 02 41 00, 1.5.7	D-L4, ER-L4	D-L4, ER-L4		e-mail by District	Do not begin demolition until authorization is received from the District.
1.10	Notify the District	Demolition 02 41 00, 1.9	CQC-L4	D-L4, ER-L4	provide >In writing 10 working days prior to start	e-mail by Contractor	Notify the District in writing 10 working days prior to the commencement of work.
1.11	Repair or replace damages	Demolition 02 41 00, 1.11	CQC-L4	D-L4, ER-L4		Deficiency Report- Specifications Appendix C	Repair or replace items to be relocated which are damaged by the Contractor with new undamaged items as approved by the District.
1.12	Existing Conditions	Demolition 02 41 00, 1.12	CQC-L4, D-L4, ER-L4	D-L4, ER-L4	before work	TBD by the District	Record existing conditions in the presence of the District showing the condition of structures and other facilities adjacent to areas of alteration or removal.
2	**CONSTRUCTION**						
2.1	Initial Control Phase Inspection	Quality Control 01 45 00, 3.7.2	CQC-L5, SDQC-L5, D-L5, ER-L5,	D-L5, ER-L5	provide agenda > 48 hours prior to meeting	Initial Control Phase Inspection Checklist 01 45 00.3.10.1, & Specifications Appendix C	An Initial Control Phase Inspection shall be performed shortly after the DFOW has begun to determine if the DFOW plan is working and if the workmanship of the workers is satisfactory and meets safety standards.
2.2	Daily Follow-up Control Phase Inspections	Quality Control 01 45 00, 3.7.3	CQC-L1	N/A	N/A	Daily Quality Control Report/ Daily Activity Log (DQCR) 01 45 00.3.10.1 & Specifications Appendix C	Contractor to perform daily Follow-up Control Phase Inspections and document findings on DQCR.
2.3	EXISTING FACILITIES TO BE REMOVED	Demolition 02 41 00, 3.1	CQC-L1, D-L1	D-L4, ER-L4	N/A	Daily Quality Control Report/ Daily Activity Log (DQCR) 01 45 00.3.10.1 & Specifications	Inspect and evaluate existing structures onsite for reuse.
2.4	If hazardous materials are found	Demolition 02 41 00, 3.1	CQC-L1, D-L1	D-L4, ER-L4	notify the District	Daily Quality Control Report/ Daily Activity Log (DQCR) 01 45 00.3.10.1 & Specifications Appendix C	If hazardous materials are found including fuels, fertilizers, pesticides, etc., the Contractor shall notify the District immediately.
2.5	Dismantled and removed materials	Demolition 02 41 00, 3.1	CQC-L1, D-L1	N/A	N/A	Daily Quality Control Report/ Daily Activity Log (DQCR) 01 45 00.3.10.1 & Specifications Appendix C	Dismantled and removed materials are to be separated, set aside, and prepared as specified, and stored or delivered to a collection point for reuse, remanufacture, recycling, or other disposal, as specified. Materials shall be designated for reuse onsite whenever possible.

2.6	Non-indicated utility lines	Demolition 02 41 00, 3.1.2.2	CQC-L1, D-L1	D-L4, ER-L4	notify the District	Daily Quality Control Report/ Daily Activity Log (DQCR) 01 45 00.3.10.1 & Specifications Appendix C	When utility lines are encountered but are not indicated on the drawings, notify the District prior to further work in that area.
2.7	CONCURRENT EARTH-MOVING OPERATIONS	Demolition 02 41 00, 3.2	CQC-L1, D-L1	N/A	N/A	Daily Quality Control Report/ Daily Activity Log (DQCR) 01 45 00.3.10.1 & Specifications Appendix C	Do not begin excavation, filling, and other earth-moving operations that are sequential to demolition work in areas occupied by structures to be demolished until all demolition in the area has been completed and debris removed. Fill holes, open basements and other hazardous openings.
3	**ACCEPTANCE**						
3.1	Deficiencies & Non-Conformances of this DFOW	Quality Control 01 45 00	CQC-5, SDQC-5, D-5, ER-5, MCT-5	D-L5, ER-L4		Deficiency Logs and NCN Logs 01 45 00.3.10.1 & Appendix C	All deficiencies and non-conformances have been corrected of work in order to avoid covering deficiencies.
3.2	Final Follow-up Control Phase Inspection	01 45 00, 3.9.3	CQC-L5, D-L5, ER-L5,	D-L5, ER-L5	provide agenda > 48 hours prior to meeting	Final Follow-up Control Phase Inspection Checklist & Punch-Out 01 45 00.3.10.1 & Specifications Appendix C	Final Follow-up Control Phase Inspection checklist & punch out items have been completed.

(1): A HOLD POINT is a mandatory requirement - advance notification and acceptance (verbal/written) is required prior to continuing work.

(2): A NOTIFY POINT requires advance notification prior to performing the activity.

(3): The DISTRICT/PQACT inspection form / checklist is to be completed by the Contractor and member of the District/PQACT prior to the start of work. The inspection form/ checklist shall show no incompletions.

LEVEL 1 = CONTINUOUS INSPECTION OF ACTIVITIES, LEVEL 2 = MONITOR CRITICAL ACTIVITIES AND WITNESS TESTING, LEVEL 3 = RANDOM INSPECTION AND/OR AT COMPLETION OF WORK, LEVEL 4 = REVIEW OF PRECONSTRUCTION DOCUMENTATION, LEVEL 5 - REVIEW OF FINAL DOCUMENTS

CQC = CONTRACTOR QUALITY CONTROL SDQC = SPECIALIZED DISCIPLINE D = DISTRICT/PQACT ER = ENGINEER OF RECORD MCT = MANUFACTURER CERTIFICATION/TESTING

Approved By District/PQACT QA Manager: *DRoy Moseley* ***Date:*** *20July2018*

INSPECTION / TEST PLAN (ITP)
C-43 WEST BASIN STORAGE RESERVOIR
CONTRACT NUMBER: CN XXXXXXXXXX
CIVIL WORKS

Location: Hendry County, FL
Date Prepared:
Revision:
Contractor: **Prepared By:**

ENVIRONMENTAL PROTECTION
Spec. Section: 01 35 44, 01 56 05, 33 03 00, 33 03 01

Item No.	Attribute / Activity Description	Acceptance Criteria (Codes, Std., Spec., Drawings, Etc.)	INSPECTION REQUIREMENTS			Forms / Records / References (3)	Comments
			Inspect	Hold (1)	Notify (2)		
1	PRE-CONSTRUCTION						
1.1	Contractor's Quality Control Plan, Site Health & Safety Plan and Permits	Quality Control 01 45 00, Safety Requirements 01 35 26, Permits & Fees 00 31 46	D-L4	D-L4		Plans and Permits	Plans have been submitted by Contractor and approved by the District/PQACT. All pemits have been obtained to begin work.
1.2	Preconstruction Submittals	Submittals 01 33 00 01 35 44, 01 56 05, 33 03 00, 33 03 01	D-L4, ER-L4	D-L4, ER-L4		Transmittal 01 45 00.3.10.1. & Appen. C, Submittals 01 45 00.3.10.1. & Appen. C, Submittal Register	All preconstruction submittals for this DFOW shall be submitted by the Contractor and Approved by the District/PQACT.
1.3	Request For Information (RFIs)	Quality Control 01 45 00	D-L4, ER-L4	D-L4, ER-L4		Request for Information & Log 01 45 00.3.10.1 & Appen. C	All RFIs for this DFOW shall be answered in order to clear up any questions before work begins.
1.4	Work Plans	Quality Control 01 45 00	D-L4, ER-L4	D-L4, ER-L4		Plans	All work plans for this DFOW shall be submitted by the Contractor and approved by the District/PQACT.
1.5	Activity Hazard Analysis (AHA)	Safety Requirements 01 35 26	D-L4, ER-L4	D-L4, ER-L4		AHA 01 45 00.3.10.1 & Appen. C	The AHA for this DFOW have been submitted by the Contractor.
1.6	Previous Work Deficiencies & Non-Conformances of previous DFOW	Quality Control 01 45 00	CQC-L5, SDQC-L5, D-L5, ER-L5, MCT-L5	D-L4, ER-L4		Deficiency Logs and NCN Logs 01 45 00.3.10.1 & Appen. C	All deficiencies and non-conformances shall be corrected of previous work in order to avoid covering deficiencies.
1.7	Final Follow-up Control Phase Inspection of previous DFOW	Quality Control 01 45 00	CQC-L5, SDQC-L5, D-L5, ER-L5, MCT-L5	D-L4, ER-L4	48 Hours	Final Follow-up Control Phase Inspection Checklist & Punch-Out	Final Follow-up Control Phase Inspection checklist & punch out items shall be completed of previous work.
1.8	Preparatory Control Phase Inspection	Quality Control 01 45 00	CQC-L5, SDQC-L5, D-L5, ER-L5, MCT-L5	D-L4, ER-L4	48 Hours	Preparatory Control Phase Inspection Worksheet 01 45 00.3.10.1 & Appen. C	Preparatory Control Phase Inspection/Meeing shall be performed successfully without open issues.
2	CONSTRUCTION						
2.1	Initial Control Phase Inspection	01 45 00, 3.7.2	CQC-L5, SDQC-L5, D-L5, ER-L5,	D-L5, ER-L5	provide agenda > 48 hours prior to meeting	Initial Control Phase Inspection Checklist 01 45 00.3.10.1, & Specifications Appendix C	An Initial Control Phase Inspection shall be performed shortly after the DFOW has begun to determine if the DFOW plan is working and if the workmanship of the workers is satisfactory and meets safety standards.
2.2	Daily Follow-up Control Phase Inspections	01 45 00, 3.7.3	CQC-L1	N/A	N/A	Daily Quality Control Report/ Daily Activity Log (DQCR) 01 45 00.3.10.1 & Specifications Appendix C	Contractor to perform daily Follow-up Control Phase Inspections and document findings on DQCR.
2.3	Turbidity Barriers	33 03 00, 3.1	CQC-L1, SQDC-L1, D-L1, ER-L1			Daily Quality Control Report/ Daily Activity Log (DQCR) 01 45 00.3.10.1 & Specifications Appendix C	The turbidity controls shall be inspected by the Contractor every work day, after every rainfall event of 0.5 inches or greater in a 24-hour period, and after every extreme weather event that could dislodge or damage the turbidity controls. SEE Specifications
2.4	MONITORING Turbidity Barriers	33 03 00, 3.2	CQC-L1, SQDC-L1, D-L1, ER-L1			Daily Quality Control Report/ Daily Activity Log (DQCR) 01 45 00.3.10.1 & Specifications Appendix C	The Contractor shall conduct and record the results of turbidity monitoring appropriate to the conditions and at the locations, times, and frequencies specified below. An FDEP approved Turbidity Monitoring Log is attached (Appendix A) for the Contractor's use.
2.5	MONITORING Turbidity Barriers - Background Monitoring Location	33 03 00, 3.2	CQC-L1, SQDC-L1, D-L1, ER-L1			Daily Quality Control Report/ Daily Activity Log (DQCR) 01 45 00.3.10.1 & Specifications Appendix C	At least 100 feet (or as specified in the applicable environmental permit) upstream of any construction activities that may generate turbidity within a canal or conveyance feature outside the construction area, in the middle of the canal, at mid-depth in the water column, and outside of any visible turbidity plume.
2.6	MONITORING Turbidity Barriers - Compliance Monitoring Location	33 03 00, 3.2	CQC-L1, SQDC-L1, D-L1, ER-L1			Daily Quality Control Report/ Daily Activity Log (DQCR) 01 45 00.3.10.1 & Specifications Appendix C	Located in the canal or water body adjacent to each Work area, downstream or radial to the construction or maintenance work area, directly outside of the turbidity barriers, and within the densest portion of any visible plume.

2.7	MONITORING Turbidity Barriers - Sampling Time	33 03 00, 3.2	CQC-L1, SQDC-L1, D-L1, ER-L1			Daily Quality Control Report/ Daily Activity Log (DQCR) 01 45 00.3.10.1 & Specifications Appendix C	Water samples for the turbidity measurement shall be collected beginning no sooner than one (1) hour after and no later than two (2) hours after construction activity commences (or as specified in the applicable environmental permit) and every four (4) hours thereafter until the work day ends.
2.8	MONITORING Turbidity Barriers - Sampling Time	33 03 00, 3.2	CQC-L1, SQDC-L1, D-L1, ER-L1			Daily Quality Control Report/ Daily Activity Log (DQCR) 01 45 00.3.10.1 & Specifications Appendix C	Water samples shall be collected at the same time(s) every work day according to this schedule. Any substantial deviation from this schedule must be approved by the District, unless otherwise compelled by force majeure, in which case, an explanation must be provided verbally as soon as possible and in writing within 48 hours of the deviation.
2.9	MONITORING Turbidity Barriers - Sampling Time	33 03 00, 3.2	CQC-L1, SQDC-L1, D-L1, ER-L1			Daily Quality Control Report/ Daily Activity Log (DQCR) 01 45 00.3.10.1 & Specifications Appendix C	During Activities and Conditions That Cannot Generate Construction- Related Turbidity: Once daily at 10:00 AM or as specified in the applicable environmental permit.
2.10	MONITORING Turbidity Barriers - Records Management	33 03 00, 3.2	CQC-L1, SQDC-L1, D-L1, ER-L1			Daily Quality Control Report/ Daily Activity Log (DQCR) 01 45 00.3.10.1 & Specifications Appendix C	The individual conducting the turbidity monitoring shall transcribe the readings to the approved Daily Turbidity Monitoring Log form (Appendix A) and sign and date the form at the close of each monitoring day. The notebook containing the signed and dated daily turbidity monitoring log forms shall be accessible at the construction Site during the work day.
2.11	Monitoring Data	33 03 00, 3.2	CQC-L4, SDQC-L4, D-L4, ER-L4			Transmittal 01 45 00.3.10.1. & Appen. C, Submittals 01 45 00.3.10.1. & Appen. C, Submittal Register Daily Quality Control Report/ Daily Activity Log (DQCR) 01 45 00.3.10.1 & Specifications Appendix C	The Contractor shall submit the quarterly monitoring data (Turbidity Monitoring Log forms), to the District. Documents submitted shall contain the specified information.
2.12	EXCEEDANCES OF WATER QUALITY STANDARDS	33 03 00, 3.3	CQC-L2, SDQC-L2, D-L2, ER-L2	D-L2, ER-L2		Daily Quality Control Report/ Daily Activity Log (DQCR) 01 45 00.3.10.1 & Specifications Appendix C	If at any time, monitoring reveals the turbidity level, at the compliance sampling station is greater than 29 NTUs above the corresponding background sample in Class I or III receiving waters or greater than 0 NTU above background samples in receiving waters classified as OFW (Outstanding Florida Waters), construction activities shall cease immediately.
2.13	EXCEEDANCES OF WATER QUALITY STANDARDS	33 03 00, 3.3	CQC-L2, SDQC-L2, D-L2, ER-L2	D-L2, ER-L2		Daily Quality Control Report/ Daily Activity Log (DQCR) 01 45 00.3.10.1 & Specifications Appendix C	The Contractor must notify the District and the District's Permitting and Compliance Staff immediately who then, per the permit, must notify the permitting agency of the exceedance.
2.14	Spill Event Report	33 03 01, 3.5	CQC-L2, SDQC-L2, D-L2, ER-L2	D-L2, ER-L2	submitted within 48 hours of the spill event	Transmittal 01 45 00.3.10.1. & Appen. C, Submittals 01 45 00.3.10.1. & Appen. C, Submittal Register Daily Quality Control Report/ Daily Activity Log (DQCR) 01 45 00.3.10.1 & Specifications Appendix C	The Contractor shall submit a written spill event report to the District and to the State of Florida Bureau of Emergency Response providing certification of commitment of manpower, equipment and materials necessary to prevent the spread and effect expeditious cleanup and disposal.
2.15	Portable Restrooms	33 03 01, 3.6	CQC-L1, SDQC-L1, D-L1, ER-L2	D-L1, ER-L1		Daily Quality Control Report/ Daily Activity Log (DQCR) 01 45 00.3.10.1 & Specifications Appendix C	For sanitary waste management, the Contractor shall ensure that portable restrooms will be anchored on level ground with at least a 15-foot set-back from water bodies or banks or slopes thereto.
2.16	Toxic substances & hazardus materials	33 03 01, 3.6	CQC-L1, SDQC-L1, D-L1, ER-L2	D-L1, ER-L1		Daily Quality Control Report/ Daily Activity Log (DQCR) 01 45 00.3.10.1 & Specifications Appendix C	The Contractor shall ensure toxic substances and hazardous materials are stored in a locked, blast-resistant shed anchored to a bermed concrete or asphalt pad on level ground with at least a 15-foot setback from any water bodies, conveyances thereto, or banks or slopes thereto.
2.17	Manatee Signs	01 35 44, Part 2	CQC-L1, SDQC-L1, D-L1, ER-L2	D-L1, ER-L1		Transmittal 01 45 00.3.10.1. & Appen. C, Submittals 01 45 00.3.10.1. & Appen. C, Submittal Register Daily Quality Control Report/ Daily Activity Log (DQCR) 01 45 00.3.10.1 & Specifications Appendix C	The Contractor shall provide and install manatee signs. Refer to Attachment B. Provide manatee sign shop drawings for review and approval.

2.18	Manatee Barrier	01 35 44, Part 2	CQC-L4, SQDC-L4, D-L4, ER-L4			Transmittal 01 45 00.3.10.1. & Appen. C, Submittals 01 45 00.3.10.1. & Appen. C, Submittal Register Daily Quality Control Report/ Daily Activity Log (DQCR) 01 45 00.3.10.1 & Specifications Appendix C	The Contractor shall provide and install a temporary manatee barrier. The temporary barrier shall be like the suggested design and function as the barrier presented in Attachment C. Provide manatee barrier shop drawings for review and approval.
2.19	Boater Warning Signs	01 35 44, Part 2	CQC-L4, SQDC-L4, D-L4, ER-L4			Transmittal 01 45 00.3.10.1. & Appen. C, Submittals 01 45 00.3.10.1. & Appen. C, Submittal Register Daily Quality Control Report/ Daily Activity Log (DQCR) 01 45 00.3.10.1 & Specifications Appendix C	Warning signs telling boaters of the construction work shall be placed at the mouth of the Townsend Canal at the Caloosahatchee River as specified
3	**ACCEPTANCE**						
3.1	Deficiencies & Non-Conformances of this DFOW	Quality Control 01 45 00	CQC-5, SDQC-5, D-5, ER-5, MCT-5	D-L5, ER-L4		Deficiency Logs and NCN Logs 01 45 00.3.10.1 & Appendix C	All deficiencies and non-conformances have been corrected of work in order to avoid covering deficiencies.
3.2	Final Follow-up Control Phase Inspection	01 45 00, 3.9.3	CQC-L5, D-L5, ER-L5,	D-L5, ER-L5	provide agenda > 48 hours prior to meeting	Final Follow-up Control Phase Inspection Checklist & Punch-Out 01 45 00.3.10.1 & Specifications Appendix C	Final Follow-up Control Phase Inspection checklist & punch out items have been completed.
	WARRANTY	33 03 01, 1.11	CQC-L4, SQDC-L4, D-L4, ER-L4			Transmittal 01 45 00.3.10.1. & Appen. C, Submittals 01 45 00.3.10.1. & Appen. C, Submittal Register	The warranty shall meet the requirements specified in SECTION 01 61 03 EQUIPMENT AND MATERIALS.

(1): A HOLD POINT is a mandatory requirement - advance notification and acceptance (verbal/written) is required prior to continuing work.

(2): A NOTIFY POINT requires advance notification prior to performing the activity.

(3): The DISTRICT/PQACT inspection form / checklist is to be completed by the Contractor and member of the District/PQACT prior to the start of work. The inspection form/ checklist shall show no incompletions.

LEVEL 1 = CONTINUOUS INSPECTION OF ACTIVITIES, LEVEL 2 = MONITOR CRITICAL ACTIVITIES AND WITNESS TESTING, LEVEL 3 = RANDOM INSPECTION AND/OR AT COMPLETION OF WORK, LEVEL 4 = REVIEW OF PRECONSTRUCTION DOCUMENTATION, LEVEL 5 - REVIEW OF FINAL DOCUMENTS

CQC = CONTRACTOR QUALITY CONTROL SDQC = SPECIALIZED DISCIPLINE D = DISTRICT/PQACT ER = ENGINEER OF RECORD MCT = MANUFACTURER CERTIFICATION/TESTING

Approved By District/PQACT QA Manager: *DRoy Moseley* ***Date:*** *27July2018*

INSPECTION / TEST PLAN (ITP)
C-43 WEST BASIN STORAGE RESERVOIR
CONTRACT NUMBER: CN XXXXXXXXXX
CIVIL WORKS

Location: Hendry County, FL
Date Prepared:
Revision:
Contractor: **Prepared By:**

EROSION & SEDIMENT CONTROL
Spec. Section: 31 32 11

Item No.	Attribute / Activity Description	Acceptance Criteria (Codes, Std., Spec., Drawings, Etc.)	INSPECTION REQUIREMENTS			Forms / Records / References (3)	Comments
			Inspect/Review	Hold (1)	Notify (2)		
1	PRE-CONSTRUCTION						
1.1	Contractor's Quality Control Plan, Site Health & Safety Plan and Permits	Quality Control 01 45 00, Safety Requirements 01 35 26, Permits & Fees 00 31 46	D-L4	D-L4		Plans and Permits	Plans have been submitted by Contractor and approved by the District/PQACT. All pemits have been obtained to begin work.
1.2	Preconstruction Submittals	Submittals 01 33 00 This 31 32 11	D-L4, ER-L4	D-L4, ER-L4		Transmittal 01 45 00.3.10.1. & Appen. C, Submittals 01 45 00.3.10.1. & Appen. C, Submittal Register	All preconstruction submittals for this DFOW shall be submitted by the Contractor and Approved by the District/PQACT.
1.3	Request For Information (RFIs)	Quality Control 01 45 00	D-L4, ER-L4	D-L4, ER-L4		Request for Information & Log 01 45 00.3.10.1 & Appen. C	All RFIs for this DFOW shall be answered in order to clear up any questions before work begins.
1.4	Work Plans	Quality Control 01 45 00	D-L4, ER-L4	D-L4, ER-L4		Plans	All work plans for this DFOW shall be submitted by the Contractor and approved by the District/PQACT.
1.5	Activity Hazard Analysis (AHA)	Safety Requirements 01 35 26	D-L4, ER-L4	D-L4, ER-L4		AHA 01 45 00.3.10.1 & Appen. C	The AHA for this DFOW have been submitted by the Contractor.
1.6	Previous Work Deficiencies & Non-Conformances of previous DFOW	Quality Control 01 45 00	CQC-L5, SDQC-L5, D-L5, ER-L5, MCT-L5	D-L4, ER-L4		Deficiency Logs and NCN Logs 01 45 00.3.10.1 & Appen. C	All deficiencies and non-conformances shall be corrected of previous work in order to avoid covering deficiencies.
1.7	Final Follow-up Control Phase Inspection of previous DFOW	Quality Control 01 45 00	CQC-L5, SDQC-L5, D-L5, ER-L5, MCT-L5	D-L4, ER-L4	48 Hours	Final Follow-up Control Phase Inspection Checklist & Punch-Out	Final Follow-up Control Phase Inspection checklist & punch out items shall be completed of previous work.
1.8	Preparatory Control Phase Inspection	Quality Control 01 45 00	CQC-L5, SDQC-L5, D-L5, ER-L5, MCT-L5	D-L4, ER-L4	48 Hours	Preparatory Control Phase Inspection Worksheet 01 45 00.3.10.1 & Appen. C	Preparatory Control Phase Inspection/Meeing shall be performed successfully without open issues.
1.9	Erosion Control Measures Layout	31 32 11, 3.3	CQC-L4, D-L4, ER-L4			Transmittal 01 45 00.3.10.1. & Appen. C, Submittals 01 45 00.3.10.1. & Appen. C, Submittal Register	Submit scale drawings of an erosion control measures layout that defines areas to receive recommended materials as required by federal, state or local regulations.
1.10	ADJUSTMENTS FOR OBSTRUCTIONS BELOW GROUND	31 32 11, 3.5	CQC-L4, D-L4, ER-L4			Transmittal 01 45 00.3.10.1. & Appen. C, Submittals 01 45 00.3.10.1. & Appen. C, Submittal Register	When obstructions below ground affect the work, submit shop drawings showing proposed adjustments to placement of erosion control material for approval.
1.11	Sediment or Settling Ponds	31 32 11, 3.6.2	CQC-L4, D-L4, ER-L4			Transmittal 01 45 00.3.10.1. & Appen. C, Submittals 01 45 00.3.10.1. & Appen. C, Submittal Register	Submit shop drawings of the proposed sediment or settling ponds including the pond location, the routing of the runoff into and out of the pond and the point(s) of discharge from the ponds.
2	CONSTRUCTION						
2.1	Initial Control Phase Inspection	01 45 00, 3.7.2	CQC-L5, SDQC-L5, D-L5, ER-L5,	D-L5, ER-L5	provide agenda > 48 hours prior to meeting	Initial Control Phase Inspection Checklist 01 45 00.3.10.1, & Appendix C	An Initial Control Phase Inspection shall be performed shortly after the DFOW has begun to determine if the DFOW plan is working and if the workmanship of the workers is satisfactory and meets safety standards.
2.2	Daily Follow-up Control Phase Inspections	01 45 00, 3.7.3	CQC-L1		N/A	Daily Quality Control Report/ Daily Activity Log (DQCR) 01 45 00.3.10.1 & Appendix C	Contractor to perform daily Follow-up Control Phase Inspections and document findings on DQCR.
2.3	Silt Fence	31 32 11.3.6.1	CQC-L1, D-L1			Daily Quality Control Report/ Daily Activity Log (DQCR) 01 45 00.3.10.1 & Appendix C	The silt fence shall be inspected by the Contractor every work day, after every rainfall event of 0.5 inches or greater in a 24-hour period, and after every extreme weather event that could dislodge or damage the silt fence system.

2.4	MAINTENANCE RECORD	31 32 11, 3.9	CQC-L4, D-L4, ER-L4			Transmittal 01 45 00.3.10.1. & Appen. C, Submittals 01 45 00.3.10.1. & Appen. C, Submittal Register	Submit a maintenance record describing the maintenance work performed, record of measurements and findings for product failure, recommendations for repair, and products replaced.
2.5	Maintenance Instructions	31 32 11, 3.9.2	CQC-L4, D-L4, ER-L4			Transmittal 01 45 00.3.10.1. & Appen. C, Submittals 01 45 00.3.10.1. & Appen. C, Submittal Register	Furnish written instructions containing drawings and other necessary information, describing the care of the installed material; including, when and where maintenance should occur, and the procedures for material replacement. Submit instruction for year-round care of installed material. Include manufacturer supplied spare parts.
2.6	SATISFACTORY STAND OF GRASS PLANTS	31 32 11, 3.10	CQC-L1, D-L1, ER-14			Transmittal 01 45 00.3.10.1. & Appen. C, Submittals 01 45 00.3.10.1. & Appen. C, Submittal Register	Evaluate the grass plants for species and health when the grass plants are a minimum 1 inch high. No bare areas comprising more than 1 percent of any given 1,000 square foot area. The total bare spots must not exceed 2 percent of the total vegetation area.
2.7	Application of Seed, Fertilizer, Mulching	31 32 11, 3.6.5 & 32 92 19	CQC-L1, D-L1			Daily Quality Control Report/ Daily Activity Log (DQCR)	Install seed, fertilizer and mulch in accordance with Section 32 92 19 SEEDING.
2.8	Watering Seed	31 32 11. 3.8	CQC-L3, D-L3			Daily Quality Control Report/ Daily Activity Log (DQCR)	Start watering immediately after installing the seed and mulch. Apply water to supplement rainfall at a sufficient rate to ensure moist soil conditions to a minimum 1 inch depth. Prevent run-off and puddling.
3	**ACCEPTANCE**						
3.1	Warranty	31 32 11, 1.8 & 01 61 03	D-L5, ER-L5			Transmittal 01 45 00.3.10.1. & Appen. C, Submittals 01 45 00.3.10.1. & Appen. C, Submittal Register	All Warranty submittals for this DFOW have been submitted by the Contractor and Approved by the District/PQACT. See section 01 61 03
3.2	Final Follow-up Control Phase Inspection	01 45 00, 3.9.3	CQC-L5, D-L5, ER-L5,	D-L5, ER-L5	provide agenda > 48 hours prior to meeting	Final Follow-up Control Phase Inspection Checklist & Punch-Out 01 45 00.3.10.1 & Appendix C	Final Follow-up Control Phase Inspection checklist & punch out items have been completed.

(1): A HOLD POINT is a mandatory requirement - advance notification and acceptance (verbal/written) is required prior to continuing work.
(2): A NOTIFY POINT requires advance notification prior to performing the activity.
(3): The DISTRICT/PQACT inspection form / checklist is to be completed by the Contractor and member of the District/PQACT prior to the start of work. The inspection form/ checklist shall show no incompletions.

LEVEL 1 = CONTINUOUS INSPECTION OF ACTIVITIES, LEVEL 2 = MONITOR CRITICAL ACTIVITIES AND WITNESS TESTING, LEVEL 3 = RANDOM INSPECTION AND/OR AT COMPLETION OF WORK, LEVEL 4 = REVIEW OF PRECONSTRUCTION DOCUMENTATION, LEVEL 5 - REVIEW OF FINAL DOCUMENTS

CQC = CONTRACTOR QUALITY CONTROL SDQC = SPECIALIZED DISCIPLINE D = DISTRICT/PQACT ER = ENGINEER OF RECORD MCT = MANUFACTURER CERTIFICATION/TESTING

Approved By District/PQACT QA Manager: *D Roy Moseley* ***Date:*** *27July2018*

INSPECTION / TEST PLAN (ITP)
C-43 WEST BASIN STORAGE RESERVOIR
CONTRACT NUMBER: CN XXXXXXXXXX
CIVIL WORKS

Location: Hendry County, FL
Date Prepared:
Revision:
Contractor: **Prepared By:**

DISTRICT CONSTRUCTION COMPOUND
Spec. Sections: 01 51 05, 01 52 13

Item No.	Attribute / Activity Description	Acceptance Criteria (Codes, Std., Spec., Drawings, Etc.)	INSPECTION REQUIREMENTS			Forms / Records / References (3)	Comments
			Inspect	Hold (1)	Notify (2)		
1	PRE-CONSTRUCTION						
1.1	Contractor's Quality Control Plan, Site Health & Safety Plan and Permits	Quality Control 01 45 00, Safety Requirements 01 35 26, Permits & Fees 00 31 46	D-L4	D-L4		Plans and Permits	Plans have been submitted by Contractor and approved by the District/PQACT. All pemits have been obtained to begin work.
1.2	Preconstruction Submittals	Submittals 01 33 00 01 51 05, 01 52 13	D-L4, ER-L4	D-L4, ER-L4		Transmittal 01 45 00.3.10.1. & Appen. C, Submittals 01 45 00.3.10.1. & Appen. C, Submittal Register	All preconstruction submittals for this DFOW shall be submitted by the Contractor and Approved by the District/PQACT.
1.3	Request For Information (RFIs)	Quality Control 01 45 00	D-L4, ER-L4	D-L4, ER-L4		Request for Information & Log 01 45 00.3.10.1 & Appen. C	All RFIs for this DFOW shall be answered in order to clear up any questions before work begins.
1.4	Work Plans	Quality Control 01 45 00	D-L4, ER-L4	D-L4, ER-L4		Plans	All work plans for this DFOW shall be submitted by the Contractor and approved by the District/PQACT.
1.5	Activity Hazard Analysis (AHA)	Safety Requirements 01 35 26	D-L4, ER-L4	D-L4, ER-L4		AHA 01 45 00.3.10.1 & Appen. C	The AHA for this DFOW have been submitted by the Contractor.
1.6	Previous Work Deficiencies & Non-Conformances of previous DFOW	Quality Control 01 45 00	CQC-L5, SDQC-L5, D-L5, ER-L5, MCT-L5	D-L4, ER-L4		Deficiency Logs and NCN Logs 01 45 00.3.10.1 & Appen. C	All deficiencies and non-conformances shall be corrected of previous work in order to avoid covering deficiencies.
1.7	Final Follow-up Control Phase Inspection of previous DFOW	Quality Control 01 45 00	CQC-L5, SDQC-L5, D-L5, ER-L5, MCT-L5	D-L4, ER-L4	48 Hours	Final Follow-up Control Phase Inspection Checklist & Punch-Out	Final Follow-up Control Phase Inspection checklist & punch out items shall be completed of previous work.
1.8	Preparatory Control Phase Inspection	Quality Control 01 45 00	CQC-L5, SDQC-L5, D-L5, ER-L5, MCT-L5	D-L4, ER-L4	48 Hours	Preparatory Control Phase Inspection Worksheet 01 45 00.3.10.1 & Appen. C	Preparatory Control Phase Inspection/Meeing shall be performed successfully without open issues.
2	CONSTRUCTION						
2.1	Initial Control Phase Inspection	01 45 00	CQC-L5, SDQC-L5, D-L5, ER-L5	D-L5, ER-L5	provide agenda > 48 hours prior to meeting	Initial Control Phase Inspection Agenda 01 45 00.1.10.1.13, Initial Control Phase Inspection Checklist	An Initial Control Phase Inspection shall be performed shortly after the DFOW has begun to determine if the DFOW plan is working and if the workmanship of the
2.2	Daily Follow-up Control Phase Inspections	01 45 00	CQC-L1			Daily Quality Control Report/ Daily Activity Log (DQCR) 01 45 00.3.10.1 & Attachment. C	Contractor to perform daily Follow-up Control Phase Inspections and document findings on DQCR.
2.3	Install cubicle spaces ready for occupancy within sixty (60) days of the Notice to Proceed.	01 52 13, 2.1.2	CQC-L4, SQDC-L4, D-L4, ER-L4	D-L4, ER-L4		Daily Quality Control Report/ Daily Activity Log (DQCR) 01 45 00.3.10.1 & Attachment. C	Install cubicle spaces ready for occupancy within sixty (60) days of the Notice to Proceed.
2.4	Commissioning	01 51 05, 3.1.2	CQC-L1, D-L2, ER-L2	D-L5, ER-L5		Daily Quality Control Report/ Daily Activity Log (DQCR) 01 45 00.3.10.1 & Attachment. C	The Contractor shall schedule, coordinate, provide access and make necessary provisions for a site fire inspection of the new field office trailer and all other permitted building by the Hendry County Fire Chief.
2.5	Commissioning	01 51 05, 3.1.2	CQC-L1, D-L2, ER-L2	D-L5, ER-L5		Daily Quality Control Report/ Daily Activity Log (DQCR) 01 45 00.3.10.1 & Attachment. C	The Contractor shall turn on all services in the QA Laboratory field office trailer and demonstrate that all features operate properly.
3	ACCEPTANCE						
3.1	Certificate of Occupancy for District Trailer	01 52 13.2.1	D-L5, ER-L5	D-L5, ER-L5		Transmittal 01 45 00.3.10.1. & Appen. C, Submittals 01 45 00.3.10.1. & Appen. C, D Submittal Register	All Manufactures' Instruction submittals and Hendry County's Certificate of Occupancy for this DFOW shall be submitted by the Contractor.
3.2	As-built Drawings of the new District field office including all buried utilities	01 52 13.3.6	D-L5, ER-L5	D-L5, ER-L5		Transmittal 01 45 00.3.10.1. & Appen. C, Submittals 01 45 00.3.10.1. & Appen. C, D	All Closeout submittals for this DFOW shall be submitted by the Contractor.

3.3	Final Follow-up Control Phase Inspection	01 45 00	CQC-L5, D-L5, ER-L5,	D-L5, ER-L5	provide agenda > 48 hours prior to meeting	Final Follow-up Control Phase Inspection Checklist & Punch-Out	Final Follow-up Control Phase Inspection checklist & punch out items have been completed.

(1): A HOLD POINT is a mandatory requirement - advance notification and acceptance (verbal/written) is required prior to continuing work.

(2): A NOTIFY POINT requires advance notification prior to performing the activity.

(3): The DISTRICT/PQACT inspection form / checklist is to be completed by the Contractor and member of the District/PQACT prior to the start of work. The inspection form/ checklist shall show no incompletions.

LEVEL 1 = CONTINUOUS INSPECTION OF ACTIVITIES, LEVEL 2 = MONITOR CRITICAL ACTIVITIES AND WITNESS TESTING, LEVEL 3 = RANDOM INSPECTION AND/OR AT COMPLETION OF WORK, LEVEL 4 = REVIEW OF PRECONSTRUCTION DOCUMENTATION, LEVEL 5 - REVIEW OF FINAL DOCUMENTS

CQC = CONTRACTOR QUALITY CONTROL SDQC = SPECIALIZED DISCIPLINE D = DISTRICT/PQACT ER = ENGINEER OF RECORD MCT = MANUFACTURER CERTIFICATION/TESTING

Approved By District/PQACT QA Manager: *DRoy Moseley* ***Date:*** *26July2018*

INSPECTION / TEST PLAN (ITP)
C-43 WEST BASIN STORAGE RESERVOIR
CONTRACT NUMBER: CN XXXXXXXXXX
CIVIL WORKS

Location: Hendry County, FL
Date Prepared:
Revision:
Contractor: **Prepared By:**

LAYOUT
Spec. Section: 01 71 23

Item No.	Attribute / Activity Description	Acceptance Criteria (Codes, Std., Spec., Drawings, Etc.)	INSPECTION REQUIREMENTS			Forms / Records / References (3)	Comments
			Inspect	Hold (1)	Notify (2)		
1	PRE-CONSTRUCTION						
1.1	Contractor's Quality Control Plan, Site Health & Safety Plan and Permits	Quality Control 01 45 00, Safety Requirements 01 35 26, Permits & Fees 00 31 46	D-L4	D-L4		Plans and Permits	Plans have been submitted by Contractor and approved by the District/PQACT. All pemits have been obtained to begin work.
1.2	Preconstruction Submittals	Submittals 01 33 00 01 71 23	D-L4, ER-L4	D-L4, ER-L4		Transmittal 01 45 00.3.10.1. & Appen. C, Submittals 01 45 00.3.10.1. & Appen. C, Submittal Register	All preconstruction submittals for this DFOW shall be submitted by the Contractor and Approved by the District/PQACT.
1.3	Request For Information (RFIs)	Quality Control 01 45 00	D-L4, ER-L4	D-L4, ER-L4		Request for Information & Log 01 45 00.3.10.1 & Appen. C	All RFIs for this DFOW shall be answered in order to clear up any questions before work begins.
1.4	Work Plans	Quality Control 01 45 00	D-L4, ER-L4	D-L4, ER-L4		Plans	All work plans for this DFOW shall be submitted by the Contractor and approved by the District/PQACT.
1.5	Activity Hazard Analysis (AHA)	Safety Requirements 01 35 26	D-L4, ER-L4	D-L4, ER-L4		AHA 01 45 00.3.10.1 & Appen. C	The AHA for this DFOW have been submitted by the Contractor.
1.6	Previous Work Deficiencies & Non-Conformances of previous DFOW	Quality Control 01 45 00	CQC-L5, SDQC-L5, D-L5, ER-L5, MCT-L5	D-L4, ER-L4		Deficiency Logs and NCN Logs 01 45 00.3.10.1 & Appen. C	All deficiencies and non-conformances shall be corrected of previous work in order to avoid covering deficiencies.
1.7	Final Follow-up Control Phase Inspection of previous DFOW	Quality Control 01 45 00	CQC-L5, SDQC-L5, D-L5, ER-L5, MCT-L5	D-L4, ER-L4	48 Hours	Final Follow-up Control Phase Inspection Checklist & Punch-Out	Final Follow-up Control Phase Inspection checklist & punch out items shall be completed of previous work.
1.8	Preparatory Control Phase Inspection	Quality Control 01 45 00	CQC-L5, SDQC-L5, D-L5, ER-L5, MCT-L5	D-L4, ER-L4	48 Hours	Preparatory Control Phase Inspection Worksheet 01 45 00.3.10.1 & Appen. C	Preparatory Control Phase Inspection/Meeing shall be performed successfully without open issues.
2	CONSTRUCTION						
2.1	Initial Control Phase Inspection	01 45 00, 3.7.2	CQC-L5, SDQC-L5, D-L5, ER-L5	D-L4, ER-L4	provide agenda > 48 hours prior to meeting	Initial Control Phase Inspection Checklist 01 45 00.3.10.1, & Appendix C	An Initial Control Phase Inspection shall be performed shortly after the DFOW has begun to determine if the DFOW plan is working and if the workmanship of the workers is satisfactory and meets safety standards.
2.2	Station Identification	01 71 23 3.2.1	CQC-L1, D-L1, ER-L1			Daily Quality Control Report/ Daily Activity Log (DQCR) 01 45 00.3.10.1 & Appendix C	On linear elements of construction (such as roads, dam embankments, levees, canals, and similar items) the Contractor shall place temporary identifying stakes at intervals of 100 feet using four (4) foot sections of one (1) inch by four (4) inches lumber driven into the ground.
2.3	Station Identification	01 71 23 3.2.1	CQC-L1, D-L1, ER-L1			Daily Quality Control Report/ Daily Activity Log (DQCR) 01 45 00.3.10.1 & Appendix C	The markings on the stakes shall contrast with the color of the stakes so that they are easily read from a distance of at least 50 feet. The markings on the stakes shall identify the baseline or centerline station at that location.
2.4	Station Identification	01 71 23 3.2.1	CQC-L1, D-L1, ER-L1				The Contractor shall obtain written approval of the District prior to commencing construction layout survey.
2.5	Daily Follow-up Control Phase Inspections	01 45 00, 3.7.3	CQC-L1		N/A	Daily Quality Control Report/ Daily Activity Log (DQCR) 01 45 00.3.10.1 & Appendix C	Contractor to perform daily Follow-up Control Phase Inspections and document findings on DQCR.

3	ACCEPTANCE						
3.1	Contractor shall provide: As-Built Topography Study, high definition laser scan of the pump station, cross-sections, and Preliminary Surveyor's Report	01 33 00, 01 45 00, 01 71 23.3.4	D-L5, ER-L5	D-L5, ER-L5		Transmittal 01 45 00.3.10.1. & Appen. C, D Submittals 01 45 00.3.10.1. & Appen. C, D Submittal Register	All Closeout submittals for this DFOW shall be submitted by the Contractor.
3.2	Final Follow-up Control Phase Inspection	01 45 00, 3.9.3	CQC-L5, D-L5, ER-L5	D-L5, ER-L5	provide agenda > 48 hours prior to meeting	Final Follow-up Control Phase Inspection Checklist & Punch-Out 01 45 00.3.10.1 & Appendix C	Final Follow-up Control Phase Inspection checklist & punch out items have been completed.

(1): A HOLD POINT is a mandatory requirement - advance notification and acceptance (verbal/written) is required prior to continuing work.

(2): A NOTIFY POINT requires advance notification prior to performing the activity.

(3): The DISTRICT/PQACT inspection form / checklist is to be completed by the Contractor and member of the District/PQACT prior to the start of work. The inspection form/ checklist shall show no incompletions.

LEVEL 1 = CONTINUOUS INSPECTION OF ACTIVITIES, LEVEL 2 = MONITOR CRITICAL ACTIVITIES AND WITNESS TESTING, LEVEL 3 = RANDOM INSPECTION AND/OR AT COMPLETION OF WORK, LEVEL 4 = REVIEW OF PRECONSTRUCTION DOCUMENTATION, LEVEL 5 - REVIEW OF FINAL DOCUMENTS

CQC = CONTRACTOR QUALITY CONTROL SDQC = SPECIALIZED DISCIPLINE D = DISTRICT/PQACT ER = ENGINEER OF RECORD MCT = MANUFACTURER CERTIFICATION/TESTING

Approved By District/PQACT QA Manager: *DRoy Moseley* ***Date:*** *26July2018*

INSPECTION / TEST PLAN (ITP)
C-43 WEST BASIN STORAGE RESERVOIR
CONTRACT NUMBER: CN XXXXXXXXXX
CIVIL WORKS

Location: Hendry County, FL
Date Prepared:
Revision:
Contractor: **Prepared By:**

CLEARING AND GRUBBING
Spec. Section: 31 11 00

Item No.	Attribute / Activity Description	Acceptance Criteria (Codes, Std., Spec., Drawings, Etc.)	INSPECTION REQUIREMENTS			Forms / Records / References (3)	Comments
			Inspect	Hold (1)	Notify (2)		
1	PRE-CONSTRUCTION						
1.1	Contractor's Quality Control Plan, Site Health & Safety Plan and Permits	Quality Control 01 45 00, Safety Requirements 01 35 26, Permits & Fees 00 31 46	D-L4	D-L4		Plans and Permits	Plans have been submitted by Contractor and approved by the District/PQACT. All pemits have been obtained to begin work.
1.2	Preconstruction Submittals	Submittals 01 33 00 31 11 00	D-L4, ER-L4	D-L4, ER-L4		Transmittal 01 45 00.3.10.1. & Appen. C, Submittals 01 45 00.3.10.1. & Appen. C, Submittal Register	All preconstruction submittals for this DFOW shall be submitted by the Contractor and Approved by the District/PQACT.
1.3	Request For Information (RFIs)	Quality Control 01 45 00	D-L4, ER-L4	D-L4, ER-L4		Request for Information & Log 01 45 00.3.10.1 & Appen. C	All RFIs for this DFOW shall be answered in order to clear up any questions before work begins.
1.4	Work Plans	Quality Control 01 45 00	D-L4, ER-L4	D-L4, ER-L4		Plans	All work plans for this DFOW shall be submitted by the Contractor and approved by the District/PQACT.
1.5	Activity Hazard Analysis (AHA)	Safety Requirements 01 35 26	D-L4, ER-L4	D-L4, ER-L4		AHA 01 45 00.3.10.1 & Appen. C	The AHA for this DFOW have been submitted by the Contractor.
1.6	Previous Work Deficiencies & Non-Conformances of previous DFOW	Quality Control 01 45 00	CQC-L5, SDQC-L5, D-L5, ER-L5, MCT-L5	D-L4, ER-L4		Deficiency Logs and NCN Logs 01 45 00.3.10.1 & Appen. C	All deficiencies and non-conformances shall be corrected of previous work in order to avoid covering deficiencies.
1.7	Final Follow-up Control Phase Inspection of previous DFOW	Quality Control 01 45 00	CQC-L5, SDQC-L5, D-L5, ER-L5, MCT-L5	D-L4, ER-L4	48 Hours	Final Follow-up Control Phase Inspection Checklist & Punch-Out	Final Follow-up Control Phase Inspection checklist & punch out items shall be completed of previous work.
1.8	Preparatory Control Phase Inspection	Quality Control 01 45 00	CQC-L5, SDQC-L5, D-L5, ER-L5, MCT-L5	D-L4, ER-L4	48 Hours	Preparatory Control Phase Inspection Worksheet 01 45 00.3.10.1 & Appen. C	Preparatory Control Phase Inspection/Meeing shall be performed successfully without open issues.
2	CONSTRUCTION						
2.1	Initial Control Phase Inspection	Quality Control 01 45 00, 3.7.2	CQC-L5, SDQC-L5, D-L5, ER-L5,	D-L5, ER-L5	provide agenda > 48 hours prior to meeting	Initial Control Phase Inspection Checklist 01 45 00.3.10.1, & Specifications Appendix C	An Initial Control Phase Inspection shall be performed shortly after the DFOW has begun to determine if the DFOW plan is working and if the workmanship of the workers is satisfactory and meets safety standards.
2.2	Daily Follow-up Control Phase Inspections	Quality Control 01 45 00, 3.7.3	CQC-L1	NA	N/A	DQCR 01 45 00.3.10.1 & Specifications Appendix C	Contractor to perform daily Follow-up Control Phase Inspections and document findings on DQCR.
2.3	Notify the District immediately of damage to or an encounter with an unknown existing utility line.	Clearing and Grubbing 31 11 00, 3.1.4	CQC-L2, D-L2,	D-L2	Notify the District immediately	Verbally and e-mail	Notify the District immediately of damage to or an encounter with an unknown existing utility line.
2.4	The District shall observe and the Contractor shall record the locations of any existing underground irrigation and drainage piping that is discovered by the Contractor.	Clearing and Grubbing 31 11 00, 3.3	CQC-L2, D-L2,	D-L2	District to observe	DQCR	The District shall observe and the Contractor shall record the locations of any existing underground irrigation and drainage piping that is discovered by the Contractor.

3	ACCEPTANCE						
3.1	Final Follow-up Control Phase Inspection	Quality Control 01 45 00, 3.9.3	CQC-L5, D-L5, ER-L5,	D-L5, ER-L5	provide agenda > 48 hours prior to meeting	Final Follow-up Control Phase Inspection Checklist & Punch-Out 01 45 00.3.10.1 & Specifications Appendix C	Final Follow-up Control Phase Inspection checklist & punch out items have been completed.
3.2	Complete as-built drawings of the locations of the ends of remaining pipes	Clearing and Grubbing 31 11 00, 3.3	CQC-L5	D-L5, ER-L5	Keep up to date	As-built drawings	Record as-built locations of the remaining underground piping

(1): A HOLD POINT is a mandatory requirement - advance notification and acceptance (verbal/written) is required prior to continuing work.

(2): A NOTIFY POINT requires advance notification prior to performing the activity.

(3): The DISTRICT/PQACT inspection form / checklist is to be completed by the Contractor and member of the District/PQACT prior to the start of work. The inspection form/ checklist shall show no incompletions.

LEVEL 1 = CONTINUOUS INSPECTION OF ACTIVITIES, LEVEL 2 = MONITOR CRITICAL ACTIVITIES AND WITNESS TESTING, LEVEL 3 = RANDOM INSPECTION AND/OR AT COMPLETION OF WORK, LEVEL 4 = REVIEW OF PRECONSTRUCTION DOCUMENTATION, LEVEL 5 - REVIEW OF FINAL DOCUMENTS

CQC = CONTRACTOR QUALITY CONTROL SDQC = SPECIALIZED DISCIPLINE D = DISTRICT/PQACT ER = ENGINEER OF RECORD MCT = MANUFACTURER CERTIFICATION/TESTING

Approved By District/PQACT QA Manager: *DRoy Moseley* ***Date:*** *20July2018*

INSPECTION / TEST PLAN (ITP)
C-43 WEST BASIN STORAGE RESERVOIR
CONTRACT NUMBER: CN XXXXXXXXXX
CIVIL WORKS

Location: Hendry County, FL
Date Prepared:
Revision:
Contractor: **Prepared By:**

DITCH AND CANAL FILLING
Spec. Section: 31 23 13

Item No.	Attribute / Activity Description	Acceptance Criteria (Codes, Std., Spec., Drawings, Etc.)	INSPECTION REQUIREMENTS			Forms / Records / References (3)	Comments
			Inspect	Hold (1)	Notify (2)		
1	PRE-CONSTRUCTION						
1.1	Contractor's Quality Control Plan, Site Health & Safety Plan and Permits	Quality Control 01 45 00, Safety Requirements 01 35 26, Permits & Fees 00 31 46	D-L4	D-L4		Plans and Permits	Plans have been submitted by Contractor and approved by the District/PQACT. All pemits have been obtained to begin work.
1.2	Preconstruction Submittals	Submittals 01 33 00 31 23 13	D-L4, ER-L4	D-L4, ER-L4		Transmittal 01 45 00.3.10.1. & Appen. C, Submittals 01 45 00.3.10.1. & Appen. C, Submittal Register	All preconstruction submittals for this DFOW shall be submitted by the Contractor and Approved by the District/PQACT.
1.3	Request For Information (RFIs)	Quality Control 01 45 00	D-L4, ER-L4	D-L4, ER-L4		Request for Information & Log 01 45 00.3.10.1 & Appen. C	All RFIs for this DFOW shall be answered in order to clear up any questions before work begins.
1.4	Work Plans	Quality Control 01 45 00	D-L4, ER-L4	D-L4, ER-L4		Plans	All work plans for this DFOW shall be submitted by the Contractor and approved by the District/PQACT.
1.5	Activity Hazard Analysis (AHA)	Safety Requirements 01 35 26	D-L4, ER-L4	D-L4, ER-L4		AHA 01 45 00.3.10.1 & Appen. C	The AHA for this DFOW have been submitted by the Contractor.
1.6	Previous Work Deficiencies & Non-Conformances of previous DFOW	Quality Control 01 45 00	CQC-L5, SDQC-L5, D-L5, ER-L5, MCT-L5	D-L4, ER-L4		Deficiency Logs and NCN Logs 01 45 00.3.10.1 & Appen. C	All deficiencies and non-conformances shall be corrected of previous work in order to avoid covering deficiencies.
1.7	Final Follow-up Control Phase Inspection of previous DFOW	Quality Control 01 45 00	CQC-L5, SDQC-L5, D-L5, ER-L5, MCT-L5	D-L4, ER-L4	48 Hours	Final Follow-up Control Phase Inspection Checklist & Punch-Out	Final Follow-up Control Phase Inspection checklist & punch out items shall be completed of previous work.
1.8	Preparatory Control Phase Inspection	Quality Control 01 45 00	CQC-L5, SDQC-L5, D-L5, ER-L5, MCT-L5	D-L4, ER-L4	48 Hours	Preparatory Control Phase Inspection Worksheet 01 45 00.3.10.1 & Appen. C	Preparatory Control Phase Inspection/Meeing shall be performed successfully without open issues.
2	CONSTRUCTION						
2.1	Initial Control Phase Inspection	01 45 00, 3.7.2	CQC-L5, SDQC-L5, D-L5, ER-L5,	D-L5, ER-L5	provide agenda > 48 hours prior to meeting	Initial Control Phase Inspection Checklist 01 45 00.3.10.1, & Specifications Appendix C	An Initial Control Phase Inspection shall be performed shortly after the DFOW has begun to determine if the DFOW plan is working and if the workmanship of the workers is satisfactory and meets safety standards.
2.2	Daily Follow-up Control Phase Inspections	01 45 00, 3.7.3	CQC-L1	N/A	N/A	Daily Quality Control Report/ Daily Activity Log (DQCR) 01 45 00.3.10.1 & Specifications Appendix C	Contractor to perform daily Follow-up Control Phase Inspections and document findings on DQCR.
2.3	STRIPPING	31 23 13, 3.1	CQC-L1, SDQC-L1, D-L1, ER-L1,	D-L1, ER-L1	N/A	Daily Quality Control Report/ Daily Activity Log (DQCR) 01 45 00.3.10.1 & Specifications Appendix C	The Contractor shall remove topsoil and all sand with roots and other vegetative matter from the subgrade soils to the limits shown on the Drawings.
2.4	REMOVAL OF BURIED CONDUITS	31 23 13, 3.2	CQC-L1, SDQC-L1, D-L1, ER-L1,	D-L1, ER-L1	N/A	Daily Quality Control Report/ Daily Activity Log (DQCR) 01 45 00.3.10.1 & Specifications Appendix C	The Contractor shall perform pre-trenching along the lines shown on the Drawings for exploration of and removal of existing buried irrigation and drainage (and all other) conduits within the limits shown on the
2.5	EROSION CONTROL	31 23 13, 3.3	CQC-L1, SDQC-L1, D-L1, ER-L1,	D-L1, ER-L1	N/A	Daily Quality Control Report/ Daily Activity Log (DQCR) 01 45 00.3.10.1 & Specifications Appendix C	The Contractor shall prevent and control erosion and water pollution per Florida Department of Environmental Protection (FDEP) regulations and permit conditions.
2.6	EROSION CONTROL	31 23 13, 3.3	CQC-L1, SDQC-L1, D-L1, ER-L1,	D-L1, ER-L1	N/A	Daily Quality Control Report/ Daily Activity Log (DQCR) 01 45 00.3.10.1 & Specifications Appendix C	The Contractor shall prevent and control dust.
2.7	RECLAMATION OF CANALS AND 10TH ROW DITCHES	31 23 13, 3.4	CQC-L1, SDQC-L1, D-L1, ER-L1,	D-L1, ER-L1	N/A	Daily Quality Control Report/ Daily Activity Log (DQCR) 01 45 00.3.10.1 & Specifications Appendix C	The Contractor shall excavate to remove all vegetation, roots, and soft sediments from the existing canals and 10th Row Ditches associated with the former citrus grove in the manner shown on the Drawings.
2.8	RECLAMATION OF CANALS AND 10TH ROW DITCHES	31 23 13, 3.4	CQC-L1, SDQC-L1, D-L1, ER-L1,	D-L1, ER-L1	N/A	Daily Quality Control Report/ Daily Activity Log (DQCR) 01 45 00.3.10.1 & Specifications Appendix C	The Contractor shall notify the District that the excavations are ready for inspection.

2.9	RECLAMATION OF CANALS AND 10TH ROW DITCHES	31 23 13, 3.4	CQC-L1, SDQC-L1, D-L1, ER-L1,	D-L1, ER-L1	N/A	Daily Quality Control Report/ Daily Activity Log (DQCR) 01 45 00.3.10.1 & Specifications Appendix C	The Contractor shall backfill the inspected and approved excavations with Embankment Fill as described in Specification 31 00 00.
2.10	PROOF OF CONCEPT	31 23 13, 3.5	CQC-L1, SDQC-L1, D-L1, ER-L1,	D-L1, ER-L1	N/A	Daily Quality Control Report/ Daily Activity Log (DQCR) 01 45 00.3.10.1 & Specifications Appendix C	The limits of the work completed for Proof of Concept shall be at least 1,500 feet long, and be split into 500-foot long segments along the baseline of the dam.
2.11	PREPARED FOUNDATION SOIL SEGMENT	31 23 13, 3.6	CQC-L1, SDQC-L1, D-L1, ER-L1,	D-L1, ER-L1	N/A	Daily Quality Control Report/ Daily Activity Log (DQCR) 01 45 00.3.10.1 & Specifications Appendix C	Only whole segments shall be considered by the District as complete. Each segment shall be field marked by the Contractor with stakes located 50 feet on center. The stakes shall be referenced to the project baseline of stationing.
2.12	PREPARED FOUNDATION GRADE STATUS REPORT	31 23 13, 3.8	CQC-L1, SDQC-L1, D-L1, ER-L1,	D-L1, ER-L1	N/A	Daily Quality Control Report/ Daily Activity Log (DQCR) 01 45 00.3.10.1 & Specifications Appendix C	A written report to be submitted by the Contractor on a weekly basis, that summarizes the areas where embankment foundation grades were prepared during the previous week, using project Station-Offset or other agreed upon (by the District) geo-spatial reference system as specified in section 31 23 13, 3.8
2.13	TEMPORARY GEOTECHNICAL INSTRUMENTATION	31 23 13, 3.9	CQC-L1, SDQC-L1, D-L1, ER-L1,	D-L1, ER-L1	N/A	Daily Quality Control Report/ Daily Activity Log (DQCR) 01 45 00.3.10.1 & Specifications Appendix C	Coordinate installation of Temporary Geotechnical Instrumentation as described in Section 31 09 00 prior to filling embankment.
3	**ACCEPTANCE**						
3.1	Deficiencies & Non-Conformances of this DFOW	Quality Control 01 45 00	CQC-5, SDQC-5, D-5, ER-5, MCT-5	D-L5, ER-L4		Deficiency Logs and NCN Logs 01 45 00.3.10.1 & Appendix C	All deficiencies and non-conformances have been corrected of work in order to avoid covering deficiencies.
3.2	Final Follow-up Control Phase Inspection	01 45 00, 3.9.3	CQC-L5, D-L5, ER-L5,	D-L5, ER-L5	provide agenda > 48 hours prior to meeting	Final Follow-up Control Phase Inspection Checklist & Punch-Out 01 45 00.3.10.1 & Specifications Appendix C	Final Follow-up Control Phase Inspection checklist & punch out items have been completed.

(1): A HOLD POINT is a mandatory requirement - advance notification and acceptance (verbal/written) is required prior to continuing work.

(2): A NOTIFY POINT requires advance notification prior to performing the activity.

(3): The DISTRICT/PQACT inspection form / checklist is to be completed by the Contractor and member of the District/PQACT prior to the start of work. The inspection form/ checklist shall show no incompletions.

LEVEL 1 = CONTINUOUS INSPECTION OF ACTIVITIES, LEVEL 2 = MONITOR CRITICAL ACTIVITIES AND WITNESS TESTING, LEVEL 3 = RANDOM INSPECTION AND/OR AT COMPLETION OF WORK, LEVEL 4 = REVIEW OF PRECONSTRUCTION DOCUMENTATION, LEVEL 5 - REVIEW OF FINAL DOCUMENTS

CQC = CONTRACTOR QUALITY CONTROL SDQC = SPECIALIZED DISCIPLINE D = DISTRICT/PQACT ER = ENGINEER OF RECORD MCT = MANUFACTURER CERTIFICATION/TESTING

Approved By District/PQACT QA Manager: *DRoy Moseley* ***Date:*** *25July2018*

INSPECTION / TEST PLAN (ITP)
C-43 WEST BASIN STORAGE RESERVOIR
CONTRACT NUMBER: CN XXXXXXXXXX
CIVIL WORKS

Location: Hendry County, FL
Date Prepared:
Revision:
Contractor: **Prepared By:**

PAVING
Spec. Section: 32 11 23.10, 32 12 13, 32 12 16, 32 17 23, 32 16 23

Item No.	Attribute / Activity Description	Acceptance Criteria (Codes, Std., Spec., Drawings, Etc.)	INSPECTION REQUIREMENTS			Forms / Records / References (3)	Comments
			Inspect	Hold (1)	Notify (2)		
1	PRE-CONSTRUCTION						
1.1	Contractor's Quality Control Plan, Site Health & Safety Plan and Permits	Quality Control 01 45 00, Safety Requirements 01 35 26, Permits & Fees 00 31 46	D-L4	D-L4		Plans and Permits	Plans have been submitted by Contractor and approved by the District/PQACT. All pemits have been obtained to begin work.
1.2	Preconstruction Submittals	Submittals 01 33 00 32 11 23.10, 32 12 13, 32 12 16, 32 17 23, 32 16 23	D-L4, ER-L4	D-L4, ER-L4		Transmittal 01 45 00.3.10.1. & Appen. C, Submittals 01 45 00.3.10.1. & Appen. C, Submittal Register	All preconstruction submittals for this DFOW shall be submitted by the Contractor and Approved by the District/PQACT.
1.3	Request For Information (RFIs)	Quality Control 01 45 00	D-L4, ER-L4	D-L4, ER-L4		Request for Information & Log 01 45 00.3.10.1 & Appen. C	All RFIs for this DFOW shall be answered in order to clear up any questions before work begins.
1.4	Work Plans	Quality Control 01 45 00	D-L4, ER-L4	D-L4, ER-L4		Plans	All work plans for this DFOW shall be submitted by the Contractor and approved by the District/PQACT.
1.5	Activity Hazard Analysis (AHA)	Safety Requirements 01 35 26	D-L4, ER-L4	D-L4, ER-L4		AHA 01 45 00.3.10.1 & Appen. C	The AHA for this DFOW have been submitted by the Contractor.
1.6	Previous Work Deficiencies & Non-Conformances of previous DFOW	Quality Control 01 45 00	CQC-L5, SDQC-L5, D-L5, ER-L5, MCT-L5	D-L4, ER-L4		Deficiency Logs and NCN Logs 01 45 00.3.10.1 & Appen. C	All deficiencies and non-conformances shall be corrected of previous work in order to avoid covering deficiencies.
1.7	Final Follow-up Control Phase Inspection of previous DFOW	Quality Control 01 45 00	CQC-L5, SDQC-L5, D-L5, ER-L5, MCT-L5	D-L4, ER-L4	48 Hours	Final Follow-up Control Phase Inspection Checklist & Punch-Out	Final Follow-up Control Phase Inspection checklist & punch out items shall be completed of previous work.
1.8	Preparatory Control Phase Inspection	Quality Control 01 45 00	CQC-L5, SDQC-L5, D-L5, ER-L5, MCT-L5	D-L4, ER-L4	48 Hours	Preparatory Control Phase Inspection Worksheet 01 45 00.3.10.1 & Appen. C	Preparatory Control Phase Inspection/Meeing shall be performed successfully without open issues.
1.9	Samples of the bituminous material	32 12 13, 3.6	D-L4, ER-L4	D-L4, ER-L4	Submit copies of all test results for emulsified asphalt, and bituminous materials, within 24 hours of completion of tests.	Transmittal 01 45 00.3.10.1. & Appen. C, Submittals 01 45 00.3.10.1. & Appen. C, D Submittal Register	Samples of the bituminous material shall be tested for compliance with the applicable specified requirements. A sample shall be obtained and tested by the Contractor for every 500 gallons of bituminous material used. Unless otherwise specified, sample bituminous material in accordance with ASTM D140/D140M.
1.10	Sources from which bituminous materials	32 12 13, 3.7.1	D-L4, ER-L4	D-L4, ER-L4	within 15 days after the award of the contract.	Transmittal 01 45 00.3.10.1. & Appen. C, Submittals 01 45 00.3.10.1. & Appen. C, D Submittal Register	Sources from which bituminous materials are to be obtained shall be selected and notification furnished the District.
1.11	HMA - General Quality Control Requirements	32 12 16, 3.9.1	D-L4, ER-L4	D-L4, ER-L4		Transmittal 01 45 00.3.10.1. & Appen. C, Submittals 01 45 00.3.10.1. & Appen. C, D Submittal Register	Develop and submit an approved Quality Control Plan. Submit aggregate and QC test results. Do not produce hot-mix asphalt for payment until the quality control plan has been approved addressing all elements which affect the quality of the pavement as specified.
1.12	HMA - Quality Control Testing	32 12 16, 3.9.1	D-L4, ER-L4	D-L4, ER-L4		Transmittal 01 45 00.3.10.1. & Appen. C, Submittals 01 45 00.3.10.1. & Appen. C, D Submittal Register	Develop a Quality Control Testing Plan as part of the Quality Control Program.

2	CONSTRUCTION						
2.1	Initial Control Phase Inspection	01 45 00	CQC-L5, SDQC-L5, D-L5, ER-L5, MCT-L5		provide agenda > 48 Hours prior to meeting	Initial Control Phase Inspection Agenda 01 45 00.1.10.1.13, Initial Control Phase Inspection Checklist	An Initial Control Phase Inspection shall be performed shortly after the DFOW has begun to determine if the DFOW plan is working and if the workmanship of the workers is satisfactory and meets safety standards.
2.2	Daily Follow-up Control Phase Inspections	01 45 00	CQC-L1			Daily Quality Control Report/ Daily Activity Log (DQCR) 01 45 00.3.10.1 & Appen. C	Contractor to perform daily Follow-up Control Phase Inspections and document findings on DQCR.
2.3	Limerock Base - Field Density Tests	32 11 23.10, 1.8.1	CQC-L1, SDQC-L1, D-L1, ER-L1	D-L1, ER-L1		Daily Quality Control Report/ Daily Activity Log (DQCR) 01 45 00.3.10.1 & Appen. C	If the District deems necessary, field density tests in accordance with ASTM D2922, Test for Density of Soil and Soil-Aggregate in Place by the Nuclear Method will be performed.
2.4	Limerock Base - Laboratory Compaction Tests	32 11 23.10, 1.8.1	CQC-L4, SDQC-L4, D-L4, ER-L4			Daily Quality Control Report/ Daily Activity Log (DQCR) 01 45 00.3.10.1 & Appen. C	Laboratory compaction tests in accordance with ASTM D1557 Standard Test Methods for Laboratory compaction Characteristics of Soil Using the Modified Effort (56,000 ft-lbf/cu. ft.) will also be performed.
2.5	Limerock Base - Smoothness Test	32 11 23.10, 3.4.1	CQC-L1, SDQC-L1, D-L1, ER-L1	D-L1, ER-L1		Daily Quality Control Report/ Daily Activity Log (DQCR) 01 45 00.3.10.1 & Appen. C	Perform smoothness test with a 10-foot straightedge applied parallel with and at right angles to the center line of the finished surface. Correct surface deviations more than 1/4 inch by loosening, adding or removing material, reshaping, watering, and compacting.
2.6	Limerock Base - Thickness Tests	32 11 23.10, 3.4.2	CQC-L1, SDQC-L1, D-L1, ER-L1	D-L1, ER-L1		Daily Quality Control Report/ Daily Activity Log (DQCR) 01 45 00.3.10.1 & Appen. C	Take at least one depth measurement for each 500 square yards of completed base course. Make depth measurements by test holes, at least 3 inches in diameter, through the course.
2.7	Limerock Base - Thickness Tests	32 11 23.10, 3.4.2	CQC-L1, SDQC-L1, D-L1, ER-L1	D-L1, ER-L1		Daily Quality Control Report/ Daily Activity Log (DQCR) 01 45 00.3.10.1 & Appen. C	Where thickness deficiency exceeds 1/2 inch, correct by scarifying, adding mixture of proper gradation, reblading, and recompacting. Where measured thickness exceeds 1/2 inch thicker than shown, it shall be considered as the indicated or specified thickness plus 1/2 inch or determining the average.
2.8	Limerock Base - Thickness Tests	32 11 23.10, 3.4.2	CQC-L1, SDQC-L1, D-L1, ER-L1	D-L1, ER-L1		Daily Quality Control Report/ Daily Activity Log (DQCR) 01 45 00.3.10.1 & Appen. C	Average thickness shall be the average of the depth measurements and shall not underrun the thickness shown by more than 1/4 inch.
2.9	Bituminous Material Distributor - Calibration Test	32 12 13, 3.7.2	CQC-L1, SDQC-L1, D-L1, ER-L1	D-L1, ER-L1	prior to applying the bituminous coat material	Daily Quality Control Report/ Daily Activity Log (DQCR) 01 45 00.3.10.1 & Appen. C	Calibrate the bituminous distributor in accordance with ASTM D2995, using the approved job material and prior to applying the bituminous coat material to the prepared surface.
2.10	Trial Applications	32 12 13, 3.7.3	CQC-L1, SDQC-L1, D-L1, ER-L1	D-L1, ER-L1	Before providing the complete bituminous coat	Daily Quality Control Report/ Daily Activity Log (DQCR) 01 45 00.3.10.1 & Appen. C	Before providing the complete bituminous coat, apply 3 lengths of at least 100 feet for the full width of the distributor bar to evaluate the amount of bituminous material that can be satisfactorily applied.
2.11	Tack Coat Trial Application Rate	32 12 13, 3.7.3.1	CQC-L1, SDQC-L1, D-L1, ER-L1	D-L1, ER-L1		Daily Quality Control Report/ Daily Activity Log (DQCR) 01 45 00.3.10.1 & Appen. C	Unless otherwise authorized, apply the trial application rate of bituminous tack coat materials in the amount of 0.05 gallons per square yard.
2.12	Prime Coat Trial Application Rate	32 12 13, 3.7.3.2	CQC-L1, SDQC-L1, D-L1, ER-L1	D-L1, ER-L1		Daily Quality Control Report/ Daily Activity Log (DQCR) 01 45 00.3.10.1 & Appen. C	Unless otherwise authorized, apply the trial application rate of bituminous materials in the amount of 0.25 gallon per square yard.
2.13	TRAFFIC CONTROLS	32 12 13, 3.8	CQC-L1, SDQC-L1, D-L1, ER-L1	D-L1, ER-L1		Daily Quality Control Report/ Daily Activity Log (DQCR) 01 45 00.3.10.1 & Appen. C	Keep traffic off surfaces freshly treated with bituminous material. Provide sufficient warning signs and barricades so that traffic will not travel over freshly treated surfaces.
2.14	HMA - Surface Temperature Limitations of Underlying Course	32 12 16, 1.5	CQC-L1, SDQC-L1, D-L1, ER-L1	D-L1, ER-L1		Daily Quality Control Report/ Daily Activity Log (DQCR) 01 45 00.3.10.1 & Appen. C	Do not place the hot-mix asphalt upon a wet surface or when the surface temperature of the underlying course is less than specified in Table 1.
2.15	HMA - Asphalt Content	32 12 16, 3.9.3.1	CQC-L1, SDQC-L1, D-L1, ER-L1	D-L1, ER-L1		Daily Quality Control Report/ Daily Activity Log (DQCR) 01 45 00.3.10.1 & Appen. C	A minimum of two tests to determine asphalt content by one of the following methods: the extraction method in accordance with ASTM D2172/D2172M, Method A or B, the ignition method in accordance with ASTM D6307, or the nuclear method in accordance with ASTM D4125/D4125M.
2.16	HMA - Asphalt Content	32 12 16, 3.9.3.1	CQC-L1, SDQC-L1, D-L1, ER-L1	D-L1, ER-L1		Daily Quality Control Report/ Daily Activity Log (DQCR) 01 45 00.3.10.1 & Appen. C	Calibrate the ignition oven or the nuclear gauge for the specific mix being used.

2.17	HMA - Asphalt Content	32 12 16, 3.9.3.1	CQC-L1, SDQC-L1, D-L1, ER-L1	D-L1, ER-L1		Daily Quality Control Report/ Daily Activity Log (DQCR) 01 45 00.3.10.1 & Appen. C	For the extraction method, determine the weight of ash, as described in ASTM D2172/D2172M, as part of the first extraction test performed at the beginning of plant production; and as part of every tenth extraction test performed thereafter, for the duration of plant production. The last weight of ash value obtained shall be used in the calculation of the asphalt content for the mixture.
2.18	HMA - Gradation	32 12 16, 3.9.3.2	CQC-L1, SDQC-L1, D-L1, ER-L1	D-L1, ER-L1		Daily Quality Control Report/ Daily Activity Log (DQCR) 01 45 00.3.10.1 & Appen. C	Determine aggregate gradations from mechanical analysis of recovered aggregate in accordance with ASTM D5444.
2.19	HMA - Gradation	32 12 16, 3.9.3.2	CQC-L1, SDQC-L1, D-L1, ER-L1	D-L1, ER-L1		Daily Quality Control Report/ Daily Activity Log (DQCR) 01 45 00.3.10.1 & Appen. C	When asphalt content is determined by the ignition oven or nuclear method, aggregate gradation shall be determined from hot bin samples on batch plants, or from the cold feed on drum mix plants.
2.20	HMA - Gradation	32 12 16, 3.9.3.2	CQC-L1, SDQC-L1, D-L1, ER-L1	D-L1, ER-L1		Daily Quality Control Report/ Daily Activity Log (DQCR) 01 45 00.3.10.1 & Appen. C	For batch plants, test aggregates in accordance with ASTM C136/C136M using actual batch weights to determine the combined aggregate gradation of the mixture.
2.21	HMA - Temperatures	32 12 16, 3.9.3.3	CQC-L1, SDQC-L1, D-L1, ER-L1	D-L1, ER-L1		Daily Quality Control Report/ Daily Activity Log (DQCR) 01 45 00.3.10.1 & Appen. C	Check temperatures at necessary locations, to determine the temperature at the dryer, the asphalt cement in the storage tank, the asphalt mixture at the plant, and the asphalt mixture at the job site.
2.22	HMA - Aggregate Moisture	32 12 16, 3.9.3.4	CQC-L1, SDQC-L1, D-L1, ER-L1	D-L1, ER-L1		Daily Quality Control Report/ Daily Activity Log (DQCR) 01 45 00.3.10.1 & Appen. C	Determine the moisture content of aggregate used for production in accordance with ASTM C566.
2.23	HMA - Moisture Content of Mixture	32 12 16, 3.9.3.5	CQC-L1, SDQC-L1, D-L1, ER-L1	D-L1, ER-L1		Daily Quality Control Report/ Daily Activity Log (DQCR) 01 45 00.3.10.1 & Appen. C	Determine the moisture content of the mixture in accordance with ASTM D1461 or an approved alternate procedure.
2.24	HMA - Laboratory Air Voids, Marshall Stability and Flow	32 12 16, 3.9.3.6	CQC-L1, SDQC-L1, D-L1, ER-L1	D-L1, ER-L1		Daily Quality Control Report/ Daily Activity Log (DQCR) 01 45 00.3.10.1 & Appen. C	Take a minimum of two mixture samples. When the Superpave gyratory compactor is used, mixes will be compacted to 75 gyrations in accordance with ASTM D6925.
2.25	HMA - In-Place Density	32 12 16, 3.9.3.7	CQC-L1, SDQC-L1, D-L1, ER-L1	D-L1, ER-L1		Daily Quality Control Report/ Daily Activity Log (DQCR) 01 45 00.3.10.1 & Appen. C	Conduct any necessary testing to ensure the specified density is achieved. A nuclear gauge may be used to monitor pavement density in accordance with ASTM D2950/D2950M.
2.26	HMA - Grade and Smoothness	32 12 16, 3.9.3.8	CQC-L1, SDQC-L1, D-L1, ER-L1	D-L1, ER-L1		Daily Quality Control Report/ Daily Activity Log (DQCR) 01 45 00.3.10.1 & Appen. C	Conduct the necessary checks to ensure the grade and smoothness requirements are met in accordance with paragraphs FDOT Specification Section 330.
2.27	HMA - QC Monitoring	32 12 16, 3.9.3.10	CQC-L1, SDQC-L1, D-L1, ER-L1	D-L1, ER-L1		Daily Quality Control Report/ Daily Activity Log (DQCR) 01 45 00.3.10.1 & Appen. C	Submit all QC test results to the District on a daily basis as the tests are performed.
2.28	HMA - Control Charts	32 12 16, 3.9.4	CQC-L1, SDQC-L1, D-L1, ER-L1	D-L1, ER-L1		Daily Quality Control Report/ Daily Activity Log (DQCR) 01 45 00.3.10.1 & Appen. C	For process control, establish and maintain linear control charts on both individual samples and the running average of last four samples for the parameters listed in Table 2, as a minimum.
2.29	Contractor Quality Control Testing for Pavement Markings	32 17 23, 3.1.2	CQC-L1, SDQC-L1, D-L2, ER-L2, MCT-L2			01 45 00.3.10.1.	Prior to surface preparation, demonstrate the proposed procedures and equipment. Prepare areas large enough to determine cleanliness, adhesion of remaining coating and rate of cleaning.
2.30	CONCRETE	32 16 23, 2.1	CQC-L4, SDQC-L4, D-L4, ER-L4	D-L4, ER-L4		Daily Quality Control Report/ Daily Activity Log (DQCR) 01 45 00.3.10.1 & Appen. C	The Contractor shall provide concrete for sidewalks, curbs and gutters, ramps and miscellaneous concrete slabs as specified in FDOT Specifications Section 346. For miscellaneous concrete slabs Class I concrete shall have a minimum strength of 3000 psi.

3	ACCEPTANCE						
3.1	WARRANTY	32 11 23.10, 1.10	CQC-L5, SDQC-L5, D-L5, ER-L5			Transmittal 01 45 00.3.10.1. & Appen. C, Submittals 01 45 00.3.10.1. & Appen. C, D Submittal Register	The warranty shall meet the requirements specified in Section 01 61 03 EQUIPMENT AND MATERIALS.
3.2	Final Follow-up Control Phase Inspection	01 45 00	CQC-L5, SDQC-L5, D-L5, ER-L5		provide agenda > 48 Hours prior to meeting	Final Follow-up Control Phase Inspection Checklist & Punch-Out	Final Follow-up Control Phase Inspection checklist & punch out items have been completed.

(1): A HOLD POINT is a mandatory requirement - advance notification and acceptance (verbal/written) is required prior to continuing work.
(2): A NOTIFY POINT requires advance notification prior to performing the activity.
(3): The DISTRICT/PQACT inspection form / checklist is to be completed by the Contractor and member of the District/PQACT prior to the start of work. The inspection form/ checklist shall show no incompletions.

LEVEL 1 = CONTINUOUS INSPECTION OF ACTIVITIES, LEVEL 2 = MONITOR CRITICAL ACTIVITIES AND WITNESS TESTING, LEVEL 3 = RANDOM INSPECTION AND/OR AT COMPLETION OF WORK, LEVEL 4 = REVIEW OF PRECONSTRUCTION DOCUMENTATION, LEVEL 5 - REVIEW OF FINAL DOCUMENTS

CQC = CONTRACTOR QUALITY CONTROL SDQC = SPECIALIZED DISCIPLINE D = DISTRICT/PQACT ER = ENGINEER OF RECORD MCT = MANUFACTURER CERTIFICATION/TESTING

Approved By District/PQACT QA Manager: *D Roy Moseley* ***Date:*** *27July2018*

INSPECTION / TEST PLAN (ITP)
C-43 WEST BASIN STORAGE RESERVOIR
CONTRACT NUMBER: CN XXXXXXXXXX
CIVIL WORKS

Location: Hendry County, FL
Date Prepared:
Revision:
Contractor: **Prepared By:**

ACCESS ROAD IMPROVEMENT
Spec. Section: 32 11 39

Item No.	Attribute / Activity Description	Acceptance Criteria (Codes, Std., Spec., Drawings, Etc.)	INSPECTION REQUIREMENTS			Forms / Records / References (3)	Comments
			Inspect	Hold (1)	Notify (2)		
1	PRE-CONSTRUCTION						
1.1	Contractor's Quality Control Plan, Site Health & Safety Plan and Permits	Quality Control 01 45 00, Safety Requirements 01 35 26, Permits & Fees 00 31 46	D-L4	D-L4		Plans and Permits	Plans have been submitted by Contractor and approved by the District/PQACT. All pemits have been obtained to begin work.
1.2	Preconstruction Submittals	Submittals 01 33 00 32 11 39	D-L4, ER-L4	D-L4, ER-L4		Transmittal 01 45 00.3.10.1. & Appen. C, Submittals 01 45 00.3.10.1. & Appen. C, Submittal Register	All preconstruction submittals for this DFOW shall be submitted by the Contractor and Approved by the District/PQACT.
1.3	Request For Information (RFIs)	Quality Control 01 45 00	D-L4, ER-L4	D-L4, ER-L4		Request for Information & Log 01 45 00.3.10.1 & Appen. C	All RFIs for this DFOW shall be answered in order to clear up any questions before work begins.
1.4	Work Plans	Quality Control 01 45 00	D-L4, ER-L4	D-L4, ER-L4		Plans	All work plans for this DFOW shall be submitted by the Contractor and approved by the District/PQACT.
1.5	Activity Hazard Analysis (AHA)	Safety Requirements 01 35 26	D-L4, ER-L4	D-L4, ER-L4		AHA 01 45 00.3.10.1 & Appen. C	The AHA for this DFOW have been submitted by the Contractor.
1.6	Previous Work Deficiencies & Non-Conformances of previous DFOW	Quality Control 01 45 00	CQC-L5, SDQC-L5, D-L5, ER-L5, MCT-L5	D-L4, ER-L4		Deficiency Logs and NCN Logs 01 45 00.3.10.1 & Appen. C	All deficiencies and non-conformances shall be corrected of previous work in order to avoid covering deficiencies.
1.7	Final Follow-up Control Phase Inspection of previous DFOW	Quality Control 01 45 00	CQC-L5, SDQC-L5, D-L5, ER-L5, MCT-L5	D-L4, ER-L4	48 Hours	Final Follow-up Control Phase Inspection Checklist & Punch-Out	Final Follow-up Control Phase Inspection checklist & punch out items shall be completed of previous work.
1.8	Preparatory Control Phase Inspection	Quality Control 01 45 00	CQC-L5, SDQC-L5, D-L5, ER-L5, MCT-L5	D-L4, ER-L4	48 Hours	Preparatory Control Phase Inspection Worksheet 01 45 00.3.10.1 & Appen. C	Preparatory Control Phase Inspection/Meeing shall be performed successfully without open issues.
2	CONSTRUCTION						
2.1	Initial Control Phase Inspection	01 45 00, 3.7.2	CQC-L5, SDQC-L5, D-L5, ER-L5,	D-L5, ER-L5	provide agenda > 48 hours prior to meeting	Initial Control Phase Inspection Checklist 01 45 00.3.10.1, & Specifications Appendix C	An Initial Control Phase Inspection shall be performed shortly after the DFOW has begun to determine if the DFOW plan is working and if the workmanship of the workers is satisfactory and meets safety standards.
2.2	Daily Follow-up Control Phase Inspections	01 45 00, 3.7.3	CQC-L1	N/A	N/A	Daily Quality Control Report/ Daily Activity Log (DQCR) 01 45 00.3.10.1 & Specifications	Contractor to perform daily Follow-up Control Phase Inspections and document findings on DQCR.
2.3	PREPARATION	Shell Base Course 32 11 39, 3.1	CQC-L1, SQDC-L1, D-L1, ER-L1	CQC-L1, SQDC-L1, D-L1, ER-L1	D-L1	Daily Quality Control Report/ Daily Activity Log (DQCR) 01 45 00.3.10.1 & Specifications Appendix C	The Contractor shall complete the area to be stabilized to the lines and to a grade parallel to the finished elevation of the stabilized base before the stabilizing material is added. For access roads without proposed grades or alignments prepare the area to be stabilized by meeting/matching the existing alignments and widths unless otherwise directed by the District.
2.4	SPREADING AND MIXING	Shell Base Course 32 11 39, 3.2	CQC-L1, SQDC-L1, D-L1, ER-L1	CQC-L1, SQDC-L1, D-L1, ER-L1	D-L1	Daily Quality Control Report/ Daily Activity Log (DQCR) 01 45 00.3.10.1 & Specifications Appendix C	The Contractor shall place shell rock on the areas to be stabilized and spread it uniformly to the loose depth of 6 inches or as directed by the District. The Contractor shall then thoroughly mix the shell-rock with the soil. The mixing operation shall be accomplished by use of a rotary tiller or other approved equipment and shall be repeated as may be necessary to distribute the shell rock uniformly throughout the soil for the depth indicated. The material shall be further manipulated until uniform distribution of the shellrock throughout the width and the depth is achieved.
2.5	MIXING DEPTH	Shell Base Course 32 11 39, 3.3 & FDOT Standard Specifications for Road and Bridge Construction, Section 230-5.5	CQC-L1, SQDC-L1, D-L1, ER-L1	CQC-L1, SQDC-L1, D-L1, ER-L1	D-L1	Daily Quality Control Report/ Daily Activity Log (DQCR) 01 45 00.3.10.1 & Specifications Appendix C	The Contractor shall mix the shell rock and soil to a depth as indicated and in accordance with FDOT Standard Specifications for Road and Bridge Construction Section 230-5.5.

2.6	SURFACE	Shell Base Course 32 11 39, 3.4	CQC-L1, SQDC-L1, D-L1, ER-L1	CQC-L1, SQDC-L1, D-L1, ER-L1	D-L1	Daily Quality Control Report/ Daily Activity Log (DQCR) 01 45 00.3.10.1 & Specifications Appendix C	After mixing is complete the Contractor shall shape the surface so that, after being compacted, it will conform to the lines and grades as indicated or as directed in the field.
2.7	COMPACTING AND FINISHING BASE	Shell Base Course 32 11 39, 1.5 & 32 11 39, 3.5	CQC-L1, SQDC-L1, D-L1, ER-L1	CQC-L1, SQDC-L1, D-L1, ER-L1	D-L1	Daily Quality Control Report/ Daily Activity Log (DQCR) 01 45 00.3.10.1 & Specifications Appendix C	After the spreading and mixing operations are complete, the Contractor shall compact the mixed soil/shell rock base by rolling with either the grid-type roller or the sheepsfoot roller.
2.8	COMPACTING AND FINISHING BASE	Shell Base Course 32 11 39, 1.5 & 32 11 39, 3.5	CQC-L1, SQDC-L1, D-L1, ER-L1	D-L1, ER-L1	D-L1	Testing Firm In-Place Density Reports	The Contractor shall submit density test reports for all access roads that receive the shell rock stabilization. The material being compacted shall be maintained within plus or minus 2 percent of its optimum moisture content during compaction. Final rolling shall be accomplished with traffic rollers. The base shall be compacted to the density of not less than 90% of the maximum density as determined by ASTM D1557. Density tests shall be performed at not less than 1,000 foot intervals.
3	**ACCEPTANCE**						
3.1	Deficiencies & Non-Conformances of this DFOW	Quality Control 01 45 00	CQC-5, SDQC-5, D-5, ER-5, MCT-5	D-L5, ER-L4		Deficiency Logs and NCN Logs 01 45 00.3.10.1 & Appendix C	All deficiencies and non-conformances have been corrected of work in order to avoid covering deficiencies.
3.2	Final Follow-up Control Phase Inspection	01 45 00, 3.9.3	CQC-L5, D-L5, ER-L5,	D-L5, ER-L5	provide agenda > 48 hours prior to meeting	Final Follow-up Control Phase Inspection Checklist & Punch-Out 01 45 00.3.10.1 & Specifications Appendix C	Final Follow-up Control Phase Inspection checklist & punch out items have been completed.
	WARRANTY	Shell Base Course 32 11 39, 1.8	NA	D-L5, ER-L5	NA	NA	The warranty shall meet the requirements specified in SECTION 01 61 03 EQUIPMENT AND MATERIALS.

(1): A HOLD POINT is a mandatory requirement - advance notification and acceptance (verbal/written) is required prior to continuing work.

(2): A NOTIFY POINT requires advance notification prior to performing the activity.

(3): The DISTRICT/PQACT inspection form / checklist is to be completed by the Contractor and member of the District/PQACT prior to the start of work. The inspection form/ checklist shall show no incompletions.

LEVEL 1 = CONTINUOUS INSPECTION OF ACTIVITIES, LEVEL 2 = MONITOR CRITICAL ACTIVITIES AND WITNESS TESTING, LEVEL 3 = RANDOM INSPECTION AND/OR AT COMPLETION OF WORK, LEVEL 4 = REVIEW OF PRECONSTRUCTION DOCUMENTATION, LEVEL 5 - REVIEW OF FINAL DOCUMENTS

CQC = CONTRACTOR QUALITY CONTROL SDQC = SPECIALIZED DISCIPLINE D = DISTRICT/PQACT ER = ENGINEER OF RECORD MCT = MANUFACTURER CERTIFICATION/TESTING

Approved By District/PQACT QA Manager: *DRoy Moseley* ***Date:*** *20July2018*

INSPECTION / TEST PLAN (ITP)
C-43 WEST BASIN STORAGE RESERVOIR
CONTRACT NUMBER: CN XXXXXXXXXX
CIVIL WORKS

Location: Hendry County, FL
Date Prepared:
Revision:
Contractor: **Prepared By:**

FENCING - CATTLE GUARD
Spec. Section: 32 31 53

Item No.	Attribute / Activity Description	Acceptance Criteria (Codes, Std., Spec., Drawings, Etc.)	INSPECTION REQUIREMENTS			Forms / Records / References (3)	Comments
			Inspect	Hold (1)	Notify (2)		
1	PRE-CONSTRUCTION						
1.1	Contractor's Quality Control Plan, Site Health & Safety Plan and Permits	Quality Control 01 45 00, Safety Requirements 01 35 26, Permits & Fees 00 31 46	D-L4	D-L4		Plans and Permits	Plans have been submitted by Contractor and approved by the District/PQACT. All pemits have been obtained to begin work.
1.2	Preconstruction Submittals	Submittals 01 33 00 32 31 53	D-L4, ER-L4	D-L4, ER-L4		Transmittal 01 45 00.3.10.1. & Appen. C, Submittals 01 45 00.3.10.1. & Appen. C, Submittal Register	All preconstruction submittals for this DFOW shall be submitted by the Contractor and Approved by the District/PQACT.
1.3	Request For Information (RFIs)	Quality Control 01 45 00	D-L4, ER-L4	D-L4, ER-L4		Request for Information & Log 01 45 00.3.10.1 & Appen. C	All RFIs for this DFOW shall be answered in order to clear up any questions before work begins.
1.4	Work Plans	Quality Control 01 45 00	D-L4, ER-L4	D-L4, ER-L4		Plans	All work plans for this DFOW shall be submitted by the Contractor and approved by the District/PQACT.
1.5	Activity Hazard Analysis (AHA)	Safety Requirements 01 35 26	D-L4, ER-L4	D-L4, ER-L4		AHA 01 45 00.3.10.1 & Appen. C	The AHA for this DFOW have been submitted by the Contractor.
1.6	Previous Work Deficiencies & Non-Conformances of previous DFOW	Quality Control 01 45 00	CQC-L5, SDQC-L5, D-L5, ER-L5, MCT-L5	D-L4, ER-L4		Deficiency Logs and NCN Logs 01 45 00.3.10.1 & Appen. C	All deficiencies and non-conformances shall be corrected of previous work in order to avoid covering deficiencies.
1.7	Final Follow-up Control Phase Inspection of previous DFOW	Quality Control 01 45 00	CQC-L5, SDQC-L5, D-L5, ER-L5, MCT-L5	D-L4, ER-L4	48 Hours	Final Follow-up Control Phase Inspection Checklist & Punch-Out	Final Follow-up Control Phase Inspection checklist & punch out items shall be completed of previous work.
1.8	Preparatory Control Phase Inspection	Quality Control 01 45 00	CQC-L5, SDQC-L5, D-L5, ER-L5, MCT-L5	D-L4, ER-L4	48 Hours	Preparatory Control Phase Inspection Worksheet 01 45 00.3.10.1 & Appen. C	Preparatory Control Phase Inspection/Meeing shall be performed successfully without open issues.
2	CONSTRUCTION						
2.1	Initial Control Phase Inspection	Quality Control 01 45 00, 3.7.2	CQC-L5, SDQC-L5, D-L5, ER-L5, MCT-L5	D-L5, ER-L5	provide agenda > 48 Hours prior to meeting	Initial Control Phase Inspection Agenda 01 45 00.1.10.1.13, Initial Control Phase Inspection Checklist	An Initial Control Phase Inspection shall be performed shortly after the DFOW has begun to determine if the DFOW plan is working and if the workmanship of the workers is satisfactory and meets safety standards.
2.2	CONCRETE FOUNDATION	Cattle Guard 32 31 53, 3.2	CQC-L1, SQDC-L1, D-L1, ER-L1	D-L1, ER-L1		Daily Quality Control Report/ Daily Activity Log (DQCR) 01 45 00.3.10.1 & Specifications Appendix C	The foundation shall be cast in place reinforced concrete. The foundation shall be formed to create vertical walls on all four sides with the long sides supporting the cattle guard. The interior of the foundation shall be open to allow for additional excavation below the foundation bottom.
2.3	CONCRETE FOUNDATION	Cattle Guard 32 31 53, 3.2	CQC-L1, SQDC-L1, D-L1, ER-L1	D-L1, ER-L1		Daily Quality Control Report/ Daily Activity Log (DQCR) 01 45 00.3.10.1 & Specifications Appendix C	The foundation shall be designed to allow for bolting on the steel wingwall to each end of the foundation.
2.4	CATTLE GUARD	Cattle Guard 32 31 53, 3.3	CQC-L1, SQDC-L1, D-L1, ER-L1	D-L1, ER-L1		Daily Quality Control Report/ Daily Activity Log (DQCR) 01 45 00.3.10.1 & Specifications Appendix C	The Contractor is responsible for developing the cattle guard design for each of the cattle guards. The design shall be completed under the supervision of, and signed and sealed by a qualified Florida registered professional engineer.
2.5	CATTLE GUARD WINGS	Cattle Guard 32 31 53, 3.4	CQC-L1, SQDC-L1, D-L1, ER-L1	D-L1, ER-L1		Daily Quality Control Report/ Daily Activity Log (DQCR) 01 45 00.3.10.1 & Specifications Appendix C	The Contractor is responsible for developing the cattle guard wing design for each of the cattle guards. The wings shall be constructed of steel.

2.6	CATTLE GUARD WINGS	Cattle Guard 32 31 53, 3.4	CQC-L1, SQDC-L1, D-L1, ER-L1	D-L1, ER-L1		Daily Quality Control Report/ Daily Activity Log (DQCR) 01 45 00.3.10.1 & Specifications Appendix C	The wings shall be designed so they can be bolted to the cattle guard once the cattle guard is in place. Paint the cattle guard wings using the same system as noted for the cattle guard.
2.7	PAINTING - Preparation	Cattle Guard 32 31 53, 3.5	CQC-L1, SQDC-L1, D-L1, ER-L1	D-L1, ER-L1		Daily Quality Control Report/ Daily Activity Log (DQCR) 01 45 00.3.10.1 & Specifications Appendix C	Prior to shop painting the cattle guard surfaces shall be prepared in conformance with SSPC SP16 standard. Paint the cattle guard and all associated hardware using a three-coat system.
2.8	PAINTING - 3rd coat	Cattle Guard 32 31 53, 3.5	CQC-L1, SQDC-L1, D-L1, ER-L1	D-L1, ER-L1		Daily Quality Control Report/ Daily Activity Log (DQCR) 01 45 00.3.10.1 & Specifications Appendix C	First Coat: Single component, zinc rich moisture cure urethane, 4 mils
2.9	PAINTING - 2nd coat	Cattle Guard 32 31 53, 3.5	CQC-L1, SQDC-L1, D-L1, ER-L1	D-L1, ER-L1		Daily Quality Control Report/ Daily Activity Log (DQCR) 01 45 00.3.10.1 & Specifications Appendix C	Second Coat: Single component moisture cure urethane, 4 mils
2.10	PAINTING - 3rd coat	Cattle Guard 32 31 53, 3.5	CQC-L1, SQDC-L1, D-L1, ER-L1	D-L1, ER-L1		Daily Quality Control Report/ Daily Activity Log (DQCR) 01 45 00.3.10.1 & Specifications Appendix C	Third Coat: Single component moisture cure urethane, gloss, 2 mils
2.11	PAINTING - Color	Cattle Guard 32 31 53, 3.5	CQC-L1, SQDC-L1, D-L1, ER-L1	D-L1, ER-L1		Daily Quality Control Report/ Daily Activity Log (DQCR) 01 45 00.3.10.1 & Specifications Appendix C	Paint color shall be selected by the District.
2.12	FENCING	Cattle Guard 32 31 53, 3.6	CQC-L1, SQDC-L1, D-L1, ER-L1	D-L1, ER-L1		Daily Quality Control Report/ Daily Activity Log (DQCR) 01 45 00.3.10.1 & Specifications Appendix C	Connect the adjacent fence fabric/material to each cattle guard wing so that there is no access from one side of the fence to the other at the cattle wings.
2.13	DRAINAGE SYSTEM- Excavation	Cattle Guard 32 31 53, 3.7	CQC-L1, SQDC-L1, D-L1, ER-L1	D-L1, ER-L1		Daily Quality Control Report/ Daily Activity Log (DQCR) 01 45 00.3.10.1 & Specifications Appendix C	Excavate inside the concrete foundation to a depth that is 3 feet below thebottom of the footing.
2.14	DRAINAGE SYSTEM- Excavation	Cattle Guard 32 31 53, 3.7	CQC-L1, SQDC-L1, D-L1, ER-L1	D-L1, ER-L1		Daily Quality Control Report/ Daily Activity Log (DQCR) 01 45 00.3.10.1 & Specifications Appendix C	The horizontal limits of the excavation shall be no closer than 2 feet from the inside edge of the foundation.
2.15	DRAINAGE SYSTEM- Excavation	Cattle Guard 32 31 53, 3.7	CQC-L1, SQDC-L1, D-L1, ER-L1	D-L1, ER-L1		Daily Quality Control Report/ Daily Activity Log (DQCR) 01 45 00.3.10.1 & Specifications Appendix C	Line the excavation with the filter fabric material leaving enough material to completely cover the excavation with at least 2 feet of overlapping filter material.
2.16	DRAINAGE SYSTEM- Backfill	Cattle Guard 32 31 53, 3.7	CQC-L1, SQDC-L1, D-L1, ER-L1	D-L1, ER-L1		Daily Quality Control Report/ Daily Activity Log (DQCR) 01 45 00.3.10.1 & Specifications Appendix C	Backfill the excavation with the FDOT No. 4 course aggregate material up to the bottom of the foundation elevation.
2.17	DRAINAGE SYSTEM- Backfill	Cattle Guard 32 31 53, 3.7	CQC-L1, SQDC-L1, D-L1, ER-L1	D-L1, ER-L1		Daily Quality Control Report/ Daily Activity Log (DQCR) 01 45 00.3.10.1 & Specifications Appendix C	Close the excavation by completely covering the course aggregate by placing and overlapping the filter fabric across the top of the aggregate.
2.18	DRAINAGE SYSTEM- Backfill	Cattle Guard 32 31 53, 3.7	CQC-L1, SQDC-L1, D-L1, ER-L1	D-L1, ER-L1		Daily Quality Control Report/ Daily Activity Log (DQCR) 01 45 00.3.10.1 & Specifications Appendix C	Complete the backfilling up to the bottom of the footing elevation with suitable material.
2.19	TESTING	Cattle Guard 32 31 53, 3.8	CQC-5, SDQC-5, D-5, ER-5, MCT-5	D-L5, ER-L5		Daily Quality Control Report/ Daily Activity Log (DQCR) 01 45 00.3.10.1 & Specifications Appendix C	The Contractor shall submit weld inspection and testing reports, at a minimum,(a) information required by IBC, (b) Inspecting agency, inspector, inspector's AWS certification, materials inspected, date of inspection, if materials conformed to contract requirements, repair work and follow-up inspection results, (c) Fabricator's AISC shop certification and (d) Weld test reports.
2.20	TESTING	Cattle Guard 32 31 53, 3.8	CQC-5, SDQC-5, D-5, ER-5, MCT-5	D-L5, ER-L5		Daily Quality Control Report/ Daily Activity Log (DQCR) 01 45 00.3.10.1 & Specifications Appendix C	The Contractor shall submit bolted connection inspection and testing reports, containing (a) Inspecting agency, inspector, and inspector's qualifications and (b) Connections tested and inspected, and date of test and inspection.
2.21	CLEAN UP	Cattle Guard 32 31 53, 3.9	CQC-L1, SQDC-L1, D-L1, ER-L1	D-L1, ER-L1		Daily Quality Control Report/ Daily Activity Log (DQCR) 01 45 00.3.10.1 & Specifications Appendix C	Thoroughly clean metal components, interior and exterior, exposed surfaces in a manner acceptable to the District and in accordance with cattle guard Manufacturer's recommendations.
2.22	CLEAN UP	Cattle Guard 32 31 53, 3.9	CQC-L1, SQDC-L1, D-L1, ER-L1	D-L1, ER-L1		Daily Quality Control Report/ Daily Activity Log (DQCR) 01 45 00.3.10.1 & Specifications Appendix C	Work that is damaged or defective shall be replaced.

3	ACCEPTANCE						
3.1	Deficiencies & Non-Conformances of this DFOW	Quality Control 01 45 00	CQC-5, SDQC-5, D-5, ER-5, MCT-5	D-L5, ER-L5		Deficiency Logs and NCN Logs 01 45 00.3.10.1 & Appendix C	All deficiencies and non-conformances have been corrected of work in order to avoid covering deficiencies.
3.2	Final Follow-up Control Phase Inspection	01 45 00, 3.7.3	CQC-L5, D-L5, ER-L5,	D-L5, ER-L5	provide agenda > 48 hours prior to meeting	Final Follow-up Control Phase Inspection Checklist & Punch-Out 01 45 00.3.10.1 & Specifications Appendix C	Final Follow-up Control Phase Inspection checklist & punch out items have been completed.
3.3	WARRANTY	Cattle Guard 32 31 53, 1.9	NA	D-L5, ER-L5	NA	Submittal	The warranty shall meet the requirements specified in SECTION 01 61 03 EQUIPMENT AND MATERIALS.

(1): A HOLD POINT is a mandatory requirement - advance notification and acceptance (verbal/written) is required prior to continuing work.
(2): A NOTIFY POINT requires advance notification prior to performing the activity.
(3): The DISTRICT/PQACT inspection form / checklist is to be completed by the Contractor and member of the District/PQACT prior to the start of work. The inspection form/ checklist shall show no incompletions.

LEVEL 1 = CONTINUOUS INSPECTION OF ACTIVITIES, LEVEL 2 = MONITOR CRITICAL ACTIVITIES AND WITNESS TESTING, LEVEL 3 = RANDOM INSPECTION AND/OR AT COMPLETION OF WORK, LEVEL 4 = REVIEW OF PRECONSTRUCTION DOCUMENTATION, LEVEL 5 - REVIEW OF FINAL DOCUMENTS

CQC = CONTRACTOR QUALITY CONTROL SDQC = SPECIALIZED DISCIPLINE D = DISTRICT/PQACT ER = ENGINEER OF RECORD MCT = MANUFACTURER CERTIFICATION/TESTING

Approved By District/PQACT QA Manager: *DRoy Moseley* ***Date:*** *24June2018*

INSPECTION / TEST PLAN (ITP)
C-43 WEST BASIN STORAGE RESERVOIR
CONTRACT NUMBER: CN XXXXXXXXXX

CIVIL WORKS

Location: Hendry County, FL

Date Prepared:

Revision:

Contractor: **Prepared By:**

FENCING - CHAIN LINK FENCES AND GATES
Spec. Section: 32 31 13

Item No.	Attribute / Activity Description	Acceptance Criteria (Codes, Std., Spec., Drawings, Etc.)	INSPECTION REQUIREMENTS			Forms / Records / References (3)	Comments
			Inspect	Hold (1)	Notify (2)		
1	PRE-CONSTRUCTION						
1.1	Contractor's Quality Control Plan, Site Health & Safety Plan and Permits	Quality Control 01 45 00, Safety Requirements 01 35 26, Permits & Fees 00 31 46	D-L4	D-L4		Plans and Permits	Plans have been submitted by Contractor and approved by the District/PQACT. All pemits have been obtained to begin work.
1.2	Preconstruction Submittals	Submittals 01 33 00 32 31 13	D-L4, ER-L4	D-L4, ER-L4		Transmittal 01 45 00.3.10.1. & Appen. C, Submittals 01 45 00.3.10.1. & Appen. C, Submittal Register	All preconstruction submittals for this DFOW shall be submitted by the Contractor and Approved by the District/PQACT.
1.3	Request For Information (RFIs)	Quality Control 01 45 00	D-L4, ER-L4	D-L4, ER-L4		Request for Information & Log 01 45 00.3.10.1 & Appen. C	All RFIs for this DFOW shall be answered in order to clear up any questions before work begins.
1.4	Work Plans	Quality Control 01 45 00	D-L4, ER-L4	D-L4, ER-L4		Plans	All work plans for this DFOW shall be submitted by the Contractor and approved by the District/PQACT.
1.5	Activity Hazard Analysis (AHA)	Safety Requirements 01 35 26	D-L4, ER-L4	D-L4, ER-L4		AHA 01 45 00.3.10.1 & Appen. C	The AHA for this DFOW have been submitted by the Contractor.
1.6	Previous Work Deficiencies & Non-Conformances of previous DFOW	Quality Control 01 45 00	CQC-L5, SDQC-L5, D-L5, ER-L5, MCT-L5	D-L4, ER-L4		Deficiency Logs and NCN Logs 01 45 00.3.10.1 & Appen. C	All deficiencies and non-conformances shall be corrected of previous work in order to avoid covering deficiencies.
1.7	Final Follow-up Control Phase Inspection of previous DFOW	Quality Control 01 45 00	CQC-L5, SDQC-L5, D-L5, ER-L5, MCT-L5	D-L4, ER-L4	48 Hours	Final Follow-up Control Phase Inspection Checklist & Punch-Out	Final Follow-up Control Phase Inspection checklist & punch out items shall be completed of previous work.
1.8	Preparatory Control Phase Inspection	Quality Control 01 45 00	CQC-L5, SDQC-L5, D-L5, ER-L5, MCT-L5	D-L4, ER-L4	48 Hours	Preparatory Control Phase Inspection Worksheet 01 45 00.3.10.1 & Appen. C	Preparatory Control Phase Inspection/Meeing shall be performed successfully without open issues.
1.9	DELIVERY, STORAGE, AND HANDLING	Chain Link Fences and Gates 32 31 13, 1.6	CQC-L1, SQDC-L1, D-L1, ER-L1	D-L1, ER-L1		Daily Quality Control Report/ Daily Activity Log (DQCR) 01 45 00.3.10.1 & Specifications Appendix C	Deliver materials to site in an undamaged condition. Store materials off the ground to provide protection against damage caused by ground contact.
2	CONSTRUCTION						
2.1	Initial Control Phase Inspection	01 45 00, 3.7.2	CQC-L5, SDQC-L5, D-L5, ER-L5,	D-L5, ER-L5	provide agenda > 48 hours prior to meeting	Initial Control Phase Inspection Checklist 01 45 00.3.10.1, & Specifications Appendix C	An Initial Control Phase Inspection shall be performed shortly after the DFOW has begun to determine if the DFOW plan is working and if the workmanship of the workers is satisfactory and meets safety standards.
2.2	Daily Follow-up Control Phase Inspections	01 45 00, 3.7.3	CQC-L1	D-L1	N/A	Daily Quality Control Report/ Daily Activity Log (DQCR) 01 45 00.3.10.1 & Specifications Appendix C	Contractor to perform daily Follow-up Control Phase Inspections and document findings on DQCR.
2.3	PREPARATION	32 31 13, 3.1	CQC-L1, SDQC-L1, D-L1, ER-L1,	D-L1, ER-L1		Daily Quality Control Report/ Daily Activity Log (DQCR) 01 45 00.3.10.1 & Specifications Appendix C	Ensure final grading and established elevations are complete prior.
2.4	CLEARING AND GRUBBING	32 31 13, 3.1.1	CQC-L1, SDQC-L1, D-L1, ER-L1,	D-L1, ER-L1		Daily Quality Control Report/ Daily Activity Log (DQCR) 01 45 00.3.10.1 & Specifications Appendix C	Clear fence line of trees, brush, and other obstacles to install fencing for a distance of 15' inside; and 15' outside the fence and establish a graded, compacted fence line prior to fencing installation.
2.5	INSTALLATION	32 31 13, 3.2.1	CQC-L1, SDQC-L1, D-L1, ER-L1,	D-L1, ER-L1		Daily Quality Control Report/ Daily Activity Log (DQCR) 01 45 00.3.10.1 & Specifications Appendix C	Install fence to the lines and grades indicated and in accordance with fence manufacturer's written installation instructions.
2.6	Post Spacing	32 31 13, 3.2.1.1	CQC-L1, SDQC-L1, D-L1, ER-L1,	D-L1, ER-L1		Daily Quality Control Report/ Daily Activity Log (DQCR) 01 45 00.3.10.1 & Specifications Appendix C	Provide line posts spaced equidistantly apart, not exceeding 10' on center.
2.7	Post Spacing	32 31 13, 3.2.1.1	CQC-L1, SDQC-L1, D-L1, ER-L1,	D-L1, ER-L1		Daily Quality Control Report/ Daily Activity Log (DQCR) 01 45 00.3.10.1 & Specifications Appendix C	Provide gate posts spaced as necessary for size of gate openings.

2.8	Post Spacing	32 31 13, 3.2.1.1	CQC-L1, SDQC-L1, D-L1, ER-L1,	D-L1, ER-L1		Daily Quality Control Report/ Daily Activity Log (DQCR) 01 45 00.3.10.1 & Specifications Appendix C	Do not exceed 500' on straight runs between braced posts.
2.9	Post Spacing	32 31 13, 3.2.1.1	CQC-L1, SDQC-L1, D-L1, ER-L1,	D-L1, ER-L1		Daily Quality Control Report/ Daily Activity Log (DQCR) 01 45 00.3.10.1 & Specifications Appendix C	Provide corner or pull posts, with bracing in both directions, for changes in direction of 15 degrees or more, or for abrupt changes in grade.
2.10	Top and Bottom Tension Wire	32 31 13, 3.2.1.2	CQC-L1, SDQC-L1, D-L1, ER-L1,	D-L1, ER-L1		Daily Quality Control Report/ Daily Activity Log (DQCR) 01 45 00.3.10.1 & Specifications Appendix C	Install bottom tension wires before installing chain-link fabric, and pull wires taut, placing top and bottom tension wires within 8" of respective fabric line.
2.11	Excavation	32 31 13, 3.2.2	CQC-L1, SDQC-L1, D-L1, ER-L1,	D-L1, ER-L1		Daily Quality Control Report/ Daily Activity Log (DQCR) 01 45 00.3.10.1 & Specifications Appendix C	Provide excavations for post footings in virgin or compacted soil, of minimum sizes as indicated.
2.12	Excavation	32 31 13, 3.2.2	CQC-L1, SDQC-L1, D-L1, ER-L1,	D-L1, ER-L1		Daily Quality Control Report/ Daily Activity Log (DQCR) 01 45 00.3.10.1 & Specifications Appendix C	Space footings for line posts 10' on center maximum and at closer intervals when indicated, with bottoms of the holes approximately 6" below the bottoms of the posts. Set bottom of each post not less than 42" below finished grade when in firm, undisturbed soil.
2.13	Excavation	32 31 13, 3.2.2	CQC-L1, SDQC-L1, D-L1, ER-L1,	D-L1, ER-L1		Daily Quality Control Report/ Daily Activity Log (DQCR) 01 45 00.3.10.1 & Specifications Appendix C	Set posts deeper, as required, in soft and problem soils and for heavy, lateral loads.
2.14	Excavation	32 31 13, 3.2.2	CQC-L1, SDQC-L1, D-L1, ER-L1,	D-L1, ER-L1		Daily Quality Control Report/ Daily Activity Log (DQCR) 01 45 00.3.10.1 & Specifications Appendix C	Uniformly spread soil from excavations adjacent to the fence line or on areas of District property, as directed.
2.15	Excavation	32 31 13, 3.2.2	CQC-L1, SDQC-L1, D-L1, ER-L1,	D-L1, ER-L1		Daily Quality Control Report/ Daily Activity Log (DQCR) 01 45 00.3.10.1 & Specifications Appendix C	When solid rock is encountered near the surface, drill into the rock at least 12" for line posts and at least 18" for end, pull, corner, and gate posts. Drill holes at least 1" greater in diameter than the largest dimension of the placed post.
2.16	Excavation	32 31 13, 3.2.2	CQC-L1, SDQC-L1, D-L1, ER-L1,	D-L1, ER-L1		Daily Quality Control Report/ Daily Activity Log (DQCR) 01 45 00.3.10.1 & Specifications Appendix C	If solid rock is below the soil overburden, drill to the full depth required except that penetration into rock need not exceed the minimum depths specified above.
2.17	Setting Posts	32 31 13, 3.2.3	CQC-L1, SDQC-L1, D-L1, ER-L1,	D-L1, ER-L1		Daily Quality Control Report/ Daily Activity Log (DQCR) 01 45 00.3.10.1 & Specifications Appendix C	Remove loose and foreign materials from holes and moisten the soil prior to placing concrete.
2.18	Setting Posts	32 31 13, 3.2.3	CQC-L1, SDQC-L1, D-L1, ER-L1,	D-L1, ER-L1		Daily Quality Control Report/ Daily Activity Log (DQCR) 01 45 00.3.10.1 & Specifications Appendix C	Provide tops of footings that are trowel finished and sloped or domed to shed water away from posts. Set hold-open devices, sleeves, and other accessories in concrete.
2.19	Setting Posts	32 31 13, 3.2.3	CQC-L1, SDQC-L1, D-L1, ER-L1,	D-L1, ER-L1		Daily Quality Control Report/ Daily Activity Log (DQCR) 01 45 00.3.10.1 & Specifications Appendix C	Keep exposed concrete moist for at least 7 calendar days after placement or cured with a membrane curing material, as approved.
2.20	Setting Posts	32 31 13, 3.2.3	CQC-L1, SDQC-L1, D-L1, ER-L1,	D-L1, ER-L1		Daily Quality Control Report/ Daily Activity Log (DQCR) 01 45 00.3.10.1 & Specifications Appendix C	Grout all posts set into sleeved holes in concrete with an approved grouting material.
2.21	Setting Posts	32 31 13, 3.2.3	CQC-L1, SDQC-L1, D-L1, ER-L1,	D-L1, ER-L1		Daily Quality Control Report/ Daily Activity Log (DQCR) 01 45 00.3.10.1 & Specifications Appendix C	Maintain vertical alignment of posts in concrete construction until concrete has set.
2.22	Earth and Bedrock	32 31 13, 3.2.3.1	CQC-L1, SDQC-L1, D-L1, ER-L1,	D-L1, ER-L1		Daily Quality Control Report/ Daily Activity Log (DQCR) 01 45 00.3.10.1 & Specifications Appendix C	Provide concrete bases of dimensions indicated. Compact concrete to eliminate voids, and finish to a dome shape.
2.23	Concrete Slabs and Walls	32 31 13, 3.2.3.2	CQC-L1, SDQC-L1, D-L1, ER-L1,	D-L1, ER-L1		Daily Quality Control Report/ Daily Activity Log (DQCR) 01 45 00.3.10.1 & Specifications Appendix C	Set posts into zinc-coated sleeves, set in concrete slab or wall, to a minimum depth of 12", filling sleeve joint with nonshrink grout, or other approved material.
2.24	Concrete Slabs and Walls	32 31 13, 3.2.3.2	CQC-L1, SDQC-L1, D-L1, ER-L1,	D-L1, ER-L1		Daily Quality Control Report/ Daily Activity Log (DQCR) 01 45 00.3.10.1 & Specifications Appendix C	Set posts for support of removable fence sections into sleeves that provide a tight sliding joint and hold posts aligned and plumb without use of setting material.
2.25	Bracing	32 31 13, 3.2.3.3	CQC-L1, SDQC-L1, D-L1, ER-L1,	D-L1, ER-L1		Daily Quality Control Report/ Daily Activity Log (DQCR) 01 45 00.3.10.1 & Specifications Appendix C	Brace gate, corner, end, and pull posts to nearest post with a horizontal brace rail and a diagonal tension rod. (See tolerance is Section listed.)
2.26	Concrete Strength	32 31 13, 3.2.4	CQC-L1, SDQC-L1, D-L1, ER-L1,	D-L1, ER-L1		Daily Quality Control Report/ Daily Activity Log (DQCR) 01 45 00.3.10.1 & Specifications Appendix C	Provide concrete that has attained at least 75 percent of its minimum 28-day compressive strength, but in no case sooner than 7 calendar days after placement, before rails, tension wire, or fabric are installed.
2.27	Concrete Strength	32 31 13, 3.2.4	CQC-L1, SDQC-L1, D-L1, ER-L1,	D-L1, ER-L1		Daily Quality Control Report/ Daily Activity Log (DQCR) 01 45 00.3.10.1 & Specifications Appendix C	Do not stretch fabric and wires or hang gates until the concrete has attained its full design strength. Take samples and test concrete to determine strength as specified.

2.28	Top Rails	32 31 13, 3.2.5	CQC-L1, SDQC-L1, D-L1, ER-L1,	D-L1, ER-L1		Daily Quality Control Report/ Daily Activity Log (DQCR) 01 45 00.3.10.1 & Specifications Appendix C	Provide top rails that run continuously through post caps or extension arms, bending to radius for curved runs.
2.29	Top Rails	32 31 13, 3.2.5	CQC-L1, SDQC-L1, D-L1, ER-L1,	D-L1, ER-L1		Daily Quality Control Report/ Daily Activity Log (DQCR) 01 45 00.3.10.1 & Specifications Appendix C	Provide expansion couplings as recommended by the fencing manufacturer.
2.30	Brace Assembly	32 31 13, 3.2.6	CQC-L1, SDQC-L1, D-L1, ER-L1,	D-L1, ER-L1		Daily Quality Control Report/ Daily Activity Log (DQCR) 01 45 00.3.10.1 & Specifications Appendix C	Provide bracing assemblies at end and gate posts and at both sides of corner and pull posts, with the horizontal brace located at midheight of the fabric.
2.31	Brace Assembly	32 31 13, 3.2.6	CQC-L1, SDQC-L1, D-L1, ER-L1,	D-L1, ER-L1		Daily Quality Control Report/ Daily Activity Log (DQCR) 01 45 00.3.10.1 & Specifications Appendix C	Install brace assemblies so posts are plumb when the diagonal rod is under proper tension.
2.32	Brace Assembly	32 31 13, 3.2.6	CQC-L1, SDQC-L1, D-L1, ER-L1,	D-L1, ER-L1		Daily Quality Control Report/ Daily Activity Log (DQCR) 01 45 00.3.10.1 & Specifications Appendix C	Provide two complete brace assemblies at corner and pull posts where required for stiffness and as indicated.
2.33	Tension Wire Installation	32 31 13, 3.2.7	CQC-L1, SDQC-L1, D-L1, ER-L1,	D-L1, ER-L1		Daily Quality Control Report/ Daily Activity Log (DQCR) 01 45 00.3.10.1 & Specifications Appendix C	Install tension wire by weaving them through the fabric and tying them to each post with not less than 7-gage galvanized wire or by securing the wire to the fabric with 10-gage ties or clips spaced 24 inches on center.
2.34	Fabric Installation	32 31 13, 3.2.8	CQC-L1, SDQC-L1, D-L1, ER-L1,	D-L1, ER-L1		Daily Quality Control Report/ Daily Activity Log (DQCR) 01 45 00.3.10.1 & Specifications Appendix C	Provide fabric in single lengths between stretch bars with bottom barbs placed approximately 1-1/2" above the ground line. Pull fabric taut and tied to posts, rails, and tension wire with wire ties and bands.
2.35	Fabric Installation	32 31 13, 3.2.8	CQC-L1, SDQC-L1, D-L1, ER-L1,	D-L1, ER-L1		Daily Quality Control Report/ Daily Activity Log (DQCR) 01 45 00.3.10.1 & Specifications Appendix C	Install fabric on the security side of fence, unless otherwise directed.
2.36	Fabric Installation	32 31 13, 3.2.8	CQC-L1, SDQC-L1, D-L1, ER-L1,	D-L1, ER-L1		Daily Quality Control Report/ Daily Activity Log (DQCR) 01 45 00.3.10.1 & Specifications Appendix C	Ensure fabric remains under tension after the pulling force is released.
2.37	Stretcher Bar Installation	32 31 13, 3.2.9	CQC-L1, SDQC-L1, D-L1, ER-L1,	D-L1, ER-L1		Daily Quality Control Report/ Daily Activity Log (DQCR) 01 45 00.3.10.1 & Specifications Appendix C	Thread stretcher bars through or clamped to fabric 4" on center and secured to posts with metal bands spaced 15" on center.
2.38	Gate Installation	32 31 13, 3.2.10	CQC-L1, SDQC-L1, D-L1, ER-L1,	D-L1, ER-L1		Daily Quality Control Report/ Daily Activity Log (DQCR) 01 45 00.3.10.1 & Specifications Appendix C	Field verify gates opening dimensions for gate frame fabrication, installing gates plumb, level, and secure, with full opening without interference while maintaining 4" maximum clearance beneath gate frames to finished grade.
2.39	Gate Installation	32 31 13, 3.2.10	CQC-L1, SDQC-L1, D-L1, ER-L1,	D-L1, ER-L1		Daily Quality Control Report/ Daily Activity Log (DQCR) 01 45 00.3.10.1 & Specifications Appendix C	Install ground set items in concrete for anchorage as recommended by the fence manufacturer and adjust hardware for smooth operation and lubricated where necessary.
2.40	Wire Ties	32 31 13, 3.2.11	CQC-L1, SDQC-L1, D-L1, ER-L1,	D-L1, ER-L1		Daily Quality Control Report/ Daily Activity Log (DQCR) 01 45 00.3.10.1 & Specifications Appendix C	Provide wire ties that are U-shaped to the pipe diameters to which attached. Twist ends of wire ties not less than two full turns and bent so as not to present a hazard.
2.41	Fasteners	32 31 13, 3.2.12	CQC-L1, SDQC-L1, D-L1, ER-L1,	D-L1, ER-L1		Daily Quality Control Report/ Daily Activity Log (DQCR) 01 45 00.3.10.1 & Specifications Appendix C	Install nuts for tension bands and hardware on the side of the fence opposite the fabric side. Peen ends of bolts to prevent removal of nuts.
2.42	Zinc-Coating Repair	32 31 13, 3.2.13	CQC-L1, SDQC-L1, D-L1, ER-L1,	D-L1, ER-L1		Daily Quality Control Report/ Daily Activity Log (DQCR) 01 45 00.3.10.1 & Specifications Appendix C	Clean and repair galvanized surfaces damaged by welding or abrasion, and cut ends of fabric, or other cut sections with specified galvanizing repair material applied in strict conformance with the manufacturer's printed instructions.
2.43	Post Caps	32 31 13, 3.2.14.1	CQC-L1, SDQC-L1, D-L1, ER-L1,	D-L1, ER-L1		Daily Quality Control Report/ Daily Activity Log (DQCR) 01 45 00.3.10.1 & Specifications Appendix C	Install post caps as recommended by the manufacturer.
2.44	Padlocks	32 31 13, 3.2.14.2	CQC-L1, SDQC-L1, D-L1, ER-L1,	D-L1, ER-L1		Daily Quality Control Report/ Daily Activity Log (DQCR) 01 45 00.3.10.1 & Specifications Appendix C	Provide padlocks for gate openings and provide chains that are securely attached to gate or gate posts. Provide padlocks keyed alike, and provide two keys for each padlock.
2.45	Warning Signs	32 31 13, 3.2.15	CQC-L1, SDQC-L1, D-L1, ER-L1,	D-L1, ER-L1		Daily Quality Control Report/ Daily Activity Log (DQCR) 01 45 00.3.10.1 & Specifications	Attach signs to fence fabric at locations indicated on the Drawings.
2.46	Barbed Wire and Supporting Arms	32 31 13, 3.2.16	CQC-L1, SDQC-L1, D-L1, ER-L1,	D-L1, ER-L1		Daily Quality Control Report/ Daily Activity Log (DQCR) 01 45 00.3.10.1 & Specifications	Install the supporting arms and the barbed wire outrigger system as recommended by the manufacturer.
2.47	Grounding	32 31 13, 3.2.16	CQC-L1, SDQC-L1, D-L1, ER-L1,	D-L1, ER-L1		Daily Quality Control Report/ Daily Activity Log (DQCR) 01 45 00.3.10.1 & Specifications Appendix C	Ground fencing as indicated on drawings and specified in Section 32 31 13, 3.2.17 Grounding

3	ACCEPTANCE						
3.1	Deficiencies & Non-Conformances of this DFOW	Quality Control 01 45 00	CQC-5, SDQC-5, D-5, ER-5, MCT-5	D-L5, ER-L4		Deficiency Logs and NCN Logs 01 45 00.3.10.1 & Appendix C	All deficiencies and non-conformances have been corrected of work in order to avoid covering deficiencies.
3.2	Final Follow-up Control Phase Inspection	01 45 00, 3.9.3	CQC-L5, D-L5, ER-L5,	D-L5, ER-L5	provide agenda > 48 hours prior to meeting	Final Follow-up Control Phase Inspection Checklist & Punch-Out 01 45 00.3.10.1 & Specifications Appendix C	Final Follow-up Control Phase Inspection checklist & punch out items have been completed.
3.3	Waste Removal	32 31 13, 3.3	CQC-L1, SDQC-L1, D-L1, ER-L1,	D-L1, ER-L1		Final Follow-up Control Phase Inspection Checklist & Punch-Out 01 45 00.3.10.1 & Specifications Appendix C	Remove waste fencing materials and other debris from the work site.
3.4	Manufacturer's Data	32 31 13, 3.3	CQC-L5, D-L5, ER-L5,	D-L5, ER-L5		Submittal	Submit manufacturer's data indicating percentage of recycled material content in protective fence materials, including chain link fence, fabric, and gates to verify affirmative procurement compliance.
3.5	WARRANTY	Chain Link Fences and Gates 32 31 28, 1.7	CQC-L5, D-L5, ER-L5,	D-L5, ER-L5	NA	NA	The warranty shall meet the requirements specified in SECTION 01 61 03 EQUIPMENT AND MATERIALS.

(1): A HOLD POINT is a mandatory requirement - advance notification and acceptance (verbal/written) is required prior to continuing work.

(2): A NOTIFY POINT requires advance notification prior to performing the activity.

(3): The DISTRICT/PQACT inspection form / checklist is to be completed by the Contractor and member of the District/PQACT prior to the start of work. The inspection form/ checklist shall show no incompletions.

LEVEL 1 = CONTINUOUS INSPECTION OF ACTIVITIES, LEVEL 2 = MONITOR CRITICAL ACTIVITIES AND WITNESS TESTING, LEVEL 3 = RANDOM INSPECTION AND/OR AT COMPLETION OF WORK, LEVEL 4 = REVIEW OF PRECONSTRUCTION DOCUMENTATION, LEVEL 5 - REVIEW OF FINAL DOCUMENTS

CQC = CONTRACTOR QUALITY CONTROL SDQC = SPECIALIZED DISCIPLINE D = DISTRICT/PQACT ER = ENGINEER OF RECORD MCT = MANUFACTURER CERTIFICATION/TESTING

Approved By District/PQACT QA Manager: *DRoy Moseley* ***Date:*** *20July2018*

INSPECTION / TEST PLAN (ITP)
C-43 WEST BASIN STORAGE RESERVOIR
CONTRACT NUMBER: CN XXXXXXXXXX

CIVIL WORKS

Location: Hendry County, FL

Date Prepared:

Revision:

Contractor: **Prepared By:**

FENCING - WIRE FENCES AND GATES
Spec. Section: 32 31 26

Item No.	Attribute / Activity Description	Acceptance Criteria (Codes, Std., Spec., Drawings, Etc.)	INSPECTION REQUIREMENTS			Forms / Records / References (3)	Comments
			Inspect	Hold (1)	Notify (2)		
1	PRE-CONSTRUCTION						
1.1	Contractor's Quality Control Plan, Site Health & Safety Plan and Permits	Quality Control 01 45 00, Safety Requirements 01 35 26, Permits & Fees 00 31 46	D-L4	D-L4		Plans and Permits	Plans have been submitted by Contractor and approved by the District/PQACT. All pemits have been obtained to begin work.
1.2	Preconstruction Submittals	Submittals 01 33 00 32 31 26	D-L4, ER-L4	D-L4, ER-L4		Transmittal 01 45 00.3.10.1. & Appen. C, Submittals 01 45 00.3.10.1. & Appen. C, Submittal Register	All preconstruction submittals for this DFOW shall be submitted by the Contractor and Approved by the District/PQACT.
1.3	Request For Information (RFIs)	Quality Control 01 45 00	D-L4, ER-L4	D-L4, ER-L4		Request for Information & Log 01 45 00.3.10.1 & Appen. C	All RFIs for this DFOW shall be answered in order to clear up any questions before work begins.
1.4	Work Plans	Quality Control 01 45 00	D-L4, ER-L4	D-L4, ER-L4		Plans	All work plans for this DFOW shall be submitted by the Contractor and approved by the District/PQACT.
1.5	Activity Hazard Analysis (AHA)	Safety Requirements 01 35 26	D-L4, ER-L4	D-L4, ER-L4		AHA 01 45 00.3.10.1 & Appen. C	The AHA for this DFOW have been submitted by the Contractor.
1.6	Previous Work Deficiencies & Non-Conformances of previous DFOW	Quality Control 01 45 00	CQC-L5, SDQC-L5, D-L5, ER-L5, MCT-L5	D-L4, ER-L4		Deficiency Logs and NCN Logs 01 45 00.3.10.1 & Appen. C	All deficiencies and non-conformances shall be corrected of previous work in order to avoid covering deficiencies.
1.7	Final Follow-up Control Phase Inspection of previous DFOW	Quality Control 01 45 00	CQC-L5, SDQC-L5, D-L5, ER-L5, MCT-L5	D-L4, ER-L4	48 Hours	Final Follow-up Control Phase Inspection Checklist & Punch-Out	Final Follow-up Control Phase Inspection checklist & punch out items shall be completed of previous work.
1.8	Preparatory Control Phase Inspection	Quality Control 01 45 00	CQC-L5, SDQC-L5, D-L5, ER-L5, MCT-L5	D-L4, ER-L4	48 Hours	Preparatory Control Phase Inspection Worksheet 01 45 00.3.10.1 & Appen. C	Preparatory Control Phase Inspection/Meeing shall be performed successfully without open issues.
1.9	DELIVERY, STORAGE, AND HANDLING	Wire Fences and Gates 32 31 26, 1.5	CQC-L1, SQDC-L1, D-L1, ER-L1	D-L1, ER-L1		Daily Quality Control Report/ Daily Activity Log (DQCR) 01 45 00.3.10.1 & Specifications Appendix C	Deliver materials to site in an undamaged condition. Store materials off the ground to provide protection against damage caused by ground contact.
2	CONSTRUCTION						
2.1	Initial Control Phase Inspection	01 45 00, 3.7.2	CQC-L5, SDQC-L5, D-L5, ER-L5,	D-L5, ER-L5	provide agenda > 48 hours prior to meeting	Initial Control Phase Inspection Checklist 01 45 00.3.10.1, & Specifications Appendix C	An Initial Control Phase Inspection shall be performed shortly after the DFOW has begun to determine if the DFOW plan is working and if the workmanship of the workers is satisfactory and meets safety standards.
2.2	Daily Follow-up Control Phase Inspections	01 45 00, 3.7.3	CQC-L1	D-L1	N/A	Daily Quality Control Report/ Daily Activity Log (DQCR) 01 45 00.3.10.1 & Specifications Appendix C	Contractor to perform daily Follow-up Control Phase Inspections and document findings on DQCR.
2.3	INSTALLATION	Wire Fences and Gates 32 31 26, 3.1	CQC-L1, SDQC-L1, D-L1, ER-L1,	D-L1, ER-L1		Daily Quality Control Report/ Daily Activity Log (DQCR) 01 45 00.3.10.1 & Specifications Appendix C	Install fence to the lines and grades indicated. Clear the area on either side of the fence line to the extent indicated.
2.4	POST INSTALLATION - Lining	Wire Fences and Gates 32 31 26, 3.1	CQC-L1, SDQC-L1, D-L1, ER-L1,	D-L1, ER-L1		Daily Quality Control Report/ Daily Activity Log (DQCR) 01 45 00.3.10.1 & Specifications Appendix C	Posts shall be set true to line and grade. Space line posts equidistant at intervals not exceeding 10 feet.
2.5	POST INSTALLATION - Wood Posts	Wire Fences and Gates 32 31 26, 3.3	CQC-L1, SDQC-L1, D-L1, ER-L1,	D-L1, ER-L1		Daily Quality Control Report/ Daily Activity Log (DQCR) 01 45 00.3.10.1 & Specifications Appendix C	Place backfill in layers of 9 inches or less, moistened to optimum condition, and compacted with hand tampers or other approved method.
2.6	POST INSTALLATION - Steel Posts	Wood Fences and Gates 32 31 26, 3.3	CQC-L1, SDQC-L1, D-L1, ER-L1,	D-L1, ER-L1		Daily Quality Control Report/ Daily Activity Log (DQCR) 01 45 00.3.10.1 & Specifications Appendix C	Set steel posts in concrete. Concrete shall be a 12 inch diameter x 3 feet-3 inch footing, with a minimum 2 feet-9 inch post embedment.
2.7	POST INSTALLATION - Plumbness	Wire Fences and Gates 32 31 26, 3.3	CQC-L1, SDQC-L1, D-L1, ER-L1,	D-L1, ER-L1		Daily Quality Control Report/ Daily Activity Log (DQCR) 01 45 00.3.10.1 & Specifications Appendix C	Set posts plumb and in proper alignment.
2.8	POST INSTALLATION - Pull post assemblies	Wire Fences and Gates 32 31 26, 3.3	CQC-L1, SDQC-L1, D-L1, ER-L1,	D-L1, ER-L1		Daily Quality Control Report/ Daily Activity Log (DQCR) 01 45 00.3.10.1 & Specifications Appendix C	Installed at approximately 330 foot centers except that this masximum interval may be reduced by the District on curves where the radius is less than 3 degrees.

2.9	POST INSTALLATION - Corner post assemblies	Wire Fences and Gates 32 31 26, 3.3	CQC-L1, SDQC-L1, D-L1, ER-L1,	D-L1, ER-L1		Daily Quality Control Report/ Daily Activity Log (DQCR) 01 45 00.3.10.1 & Specifications Appendix C	Corner post assemblies are to be installed at all horizontal and vertical breaks in fence of 15 degrees or more.
2.10	BARBED WIRE	Wire Fences and Gates 32 31 26, 3.3	CQC-L1, SDQC-L1, D-L1, ER-L1,	D-L1, ER-L1		Daily Quality Control Report/ Daily Activity Log (DQCR) 01 45 00.3.10.1 & Specifications Appendix C	Fasten wire to line posts at approximately 15 inch intervals unless indicated otherwise
2.11	GATE ASSEMBLY	Wire Fences and Gates 32 31 26, 3.3	CQC-L1, SDQC-L1, D-L1, ER-L1,	D-L1, ER-L1		Daily Quality Control Report/ Daily Activity Log (DQCR) 01 45 00.3.10.1 & Specifications Appendix C	Unless otherwise called for in the plans gates shall be commercially available metal swing gates assembled and installed in accordance with the manufacturer's
3	**ACCEPTANCE**						
3.1	Deficiencies & Non-Conformances of this DFOW	Quality Control 01 45 00	CQC-5, SDQC-5, D-5, ER-5, MCT-5	D-L5, ER-L4		Deficiency Logs and NCN Logs 01 45 00.3.10.1 & Appendix C	All deficiencies and non-conformances have been corrected of work in order to avoid covering deficiencies.
3.2	Final Follow-up Control Phase Inspection	01 45 00, 3.9.3	CQC-L5, D-L5, ER-L5,	D-L5, ER-L5	provide agenda > 48 hours prior to meeting	Final Follow-up Control Phase Inspection Checklist & Punch-Out 01 45 00.3.10.1 & Specifications Appendix C	Final Follow-up Control Phase Inspection checklist & punch out items have been completed.
3.3	WARRANTY	Wire Fences and Gates 32 31 26, 1.7	CQC-L5, D-L5, ER-L5,	D-L5, ER-L5	NA	NA	The warranty shall meet the requirements specified in SECTION 01 61 03 EQUIPMENT AND MATERIALS.

(1): A HOLD POINT is a mandatory requirement - advance notification and acceptance (verbal/written) is required prior to continuing work.

(2): A NOTIFY POINT requires advance notification prior to performing the activity.

(3): The DISTRICT/PQACT inspection form / checklist is to be completed by the Contractor and member of the District/PQACT prior to the start of work. The inspection form/ checklist shall show no incompletions.

LEVEL 1 = CONTINUOUS INSPECTION OF ACTIVITIES, LEVEL 2 = MONITOR CRITICAL ACTIVITIES AND WITNESS TESTING, LEVEL 3 = RANDOM INSPECTION AND/OR AT COMPLETION OF WORK, LEVEL 4 = REVIEW OF PRECONSTRUCTION DOCUMENTATION, LEVEL 5 - REVIEW OF FINAL DOCUMENTS

CQC = CONTRACTOR QUALITY CONTROL SDQC = SPECIALIZED DISCIPLINE D = DISTRICT/PQACT ER = ENGINEER OF RECORD MCT = MANUFACTURER CERTIFICATION/TESTING

Approved By District/PQACT QA Manager: *DRoy Moseley* ***Date:*** *20July2018*

INSPECTION / TEST PLAN (ITP)
C-43 WEST BASIN STORAGE RESERVOIR
CONTRACT NUMBER: CN XXXXXXXXXX

CIVIL WORKS

Location: Hendry County, FL

Date Prepared:

Revision:

Contractor: **Prepared By:**

FENCING - WOOD FENCES AND GATES
Spec. Section: 32 31 29

Item No.	Attribute / Activity Description	Acceptance Criteria (Codes, Std., Spec., Drawings, Etc.)	INSPECTION REQUIREMENTS			Forms / Records / References (3)	Comments
			Inspect	Hold (1)	Notify (2)		
1	PRE-CONSTRUCTION						
1.1	Contractor's Quality Control Plan, Site Health & Safety Plan and Permits	Quality Control 01 45 00, Safety Requirements 01 35 26, Permits & Fees 00 31 46	D-L4	D-L4		Plans and Permits	Plans have been submitted by Contractor and approved by the District/PQACT. All pemits have been obtained to begin work.
1.2	Preconstruction Submittals	Submittals 01 33 00 32 31 29	D-L4, ER-L4	D-L4, ER-L4		Transmittal 01 45 00.3.10.1. & Appen. C, Submittals 01 45 00.3.10.1. & Appen. C, Submittal Register	All preconstruction submittals for this DFOW shall be submitted by the Contractor and Approved by the District/PQACT.
1.3	Request For Information (RFIs)	Quality Control 01 45 00	D-L4, ER-L4	D-L4, ER-L4		Request for Information & Log 01 45 00.3.10.1 & Appen. C	All RFIs for this DFOW shall be answered in order to clear up any questions before work begins.
1.4	Work Plans	Quality Control 01 45 00	D-L4, ER-L4	D-L4, ER-L4		Plans	All work plans for this DFOW shall be submitted by the Contractor and approved by the District/PQACT.
1.5	Activity Hazard Analysis (AHA)	Safety Requirements 01 35 26	D-L4, ER-L4	D-L4, ER-L4		AHA 01 45 00.3.10.1 & Appen. C	The AHA for this DFOW have been submitted by the Contractor.
1.6	Previous Work Deficiencies & Non-Conformances of previous DFOW	Quality Control 01 45 00	CQC-L5, SDQC-L5, D-L5, ER-L5, MCT-L5	D-L4, ER-L4		Deficiency Logs and NCN Logs 01 45 00.3.10.1 & Appen. C	All deficiencies and non-conformances shall be corrected of previous work in order to avoid covering deficiencies.
1.7	Final Follow-up Control Phase Inspection of previous DFOW	Quality Control 01 45 00	CQC-L5, SDQC-L5, D-L5, ER-L5, MCT-L5	D-L4, ER-L4	48 Hours	Final Follow-up Control Phase Inspection Checklist & Punch-Out	Final Follow-up Control Phase Inspection checklist & punch out items shall be completed of previous work.
1.8	Preparatory Control Phase Inspection	Quality Control 01 45 00	CQC-L5, SDQC-L5, D-L5, ER-L5, MCT-L5	D-L4, ER-L4	48 Hours	Preparatory Control Phase Inspection Worksheet 01 45 00.3.10.1 & Appen. C	Preparatory Control Phase Inspection/Meeing shall be performed successfully without open issues.
1.9	DELIVERY, STORAGE, AND HANDLING	Wood Fences and Gates 32 31 29, 1.5	CQC-L1, SQDC-L1, D-L1, ER-L1	D-L1, ER-L1		Daily Quality Control Report/ Daily Activity Log (DQCR) 01 45 00.3.10.1 & Specifications Appendix C	Deliver materials to site in an undamaged condition. Store materials off the ground to provide protection against damage caused by ground contact.
2	CONSTRUCTION						
2.1	Initial Control Phase Inspection	01 45 00, 3.7.2	CQC-L5, SDQC-L5, D-L5, ER-L5,	D-L5, ER-L5	provide agenda > 48 hours prior to meeting	Initial Control Phase Inspection Checklist 01 45 00.3.10.1, & Specifications Appendix C	An Initial Control Phase Inspection shall be performed shortly after the DFOW has begun to determine if the DFOW plan is working and if the workmanship of the workers is satisfactory and meets safety standards.
2.2	Daily Follow-up Control Phase Inspections	01 45 00, 3.7.3	CQC-L1	D-L1	N/A	Daily Quality Control Report/ Daily Activity Log (DQCR) 01 45 00.3.10.1 & Specifications	Contractor to perform daily Follow-up Control Phase Inspections and document findings on DQCR.
2.3	INSTALLATION	Wood Fences and Gates 32 31 29, 3.1	CQC-L1, SDQC-L1, D-L1, ER-L1,	D-L1, ER-L1		Daily Quality Control Report/ Daily Activity Log (DQCR) 01 45 00.3.10.1 & Specifications Appendix C	Install fence to the lines and grades indicated. Clear the area on either side of the fence line to the extent indicated.
2.4	POST INSTALLATION - Lining	Wood Fences and Gates 32 31 29, 3.2	CQC-L1, SDQC-L1, D-L1, ER-L1,	D-L1, ER-L1		Daily Quality Control Report/ Daily Activity Log (DQCR) 01 45 00.3.10.1 & Specifications Appendix C	Posts shall be set true to line and grade. Space line posts equidistant at intervals not exceeding 10 feet.
2.5	POST INSTALLATION - Hole excavation	Wood Fences and Gates 32 31 29, 3.2	CQC-L1, SDQC-L1, D-L1, ER-L1,	D-L1, ER-L1		Daily Quality Control Report/ Daily Activity Log (DQCR) 01 45 00.3.10.1 & Specifications Appendix C	Excavate to depth indicated and brace post until backfill is completed.
2.6	POST INSTALLATION - Hole backfill	Wood Fences and Gates 32 31 29, 3.2	CQC-L1, SDQC-L1, D-L1, ER-L1,	D-L1, ER-L1		Daily Quality Control Report/ Daily Activity Log (DQCR) 01 45 00.3.10.1 & Specifications Appendix C	Place backfill in layers of 9 inches or less, moistened to optimum condition, and compacted with hand tampers or other approved method.
2.7	POST INSTALLATION - Plumbness	Wood Fences and Gates 32 31 29, 3.2	CQC-L1, SDQC-L1, D-L1, ER-L1,	D-L1, ER-L1		Daily Quality Control Report/ Daily Activity Log (DQCR) 01 45 00.3.10.1 & Specifications Appendix C	Set posts plumb and in proper alignment.
2.8	RAIL INSTALLATION	Wood Fences and Gates 32 31 29, 3.3	CQC-L1, SDQC-L1, D-L1, ER-L1,	D-L1, ER-L1		Daily Quality Control Report/ Daily Activity Log (DQCR) 01 45 00.3.10.1 & Specifications Appendix C	Mill ends of rails so that they fit within the post notches. Install rails level and to the dimensions indicated.

3	ACCEPTANCE						
3.1	Deficiencies & Non-Conformances of this DFOW	Quality Control 01 45 00	CQC-5, SDQC-5, D-5, ER-5, MCT-5	D-L5, ER-L4		Deficiency Logs and NCN Logs 01 45 00.3.10.1 & Appendix C	All deficiencies and non-conformances have been corrected of work in order to avoid covering deficiencies.
3.2	Final Follow-up Control Phase Inspection	01 45 00, 3.9.3	CQC-L5, D-L5, ER-L5,	D-L5, ER-L5	provide agenda > 48 hours prior to meeting	Final Follow-up Control Phase Inspection Checklist & Punch-Out 01 45 00.3.10.1 & Specifications Appendix C	Final Follow-up Control Phase Inspection checklist & punch out items have been completed.
3.3	WARRANTY	Wood Fences and Gates 32 31 29, 1.6	CQC-L5, D-L5, ER-L5,	D-L5, ER-L5	NA	NA	The warranty shall meet the requirements specified in SECTION 01 61 03 EQUIPMENT AND MATERIALS.

(1): A HOLD POINT is a mandatory requirement - advance notification and acceptance (verbal/written) is required prior to continuing work.

(2): A NOTIFY POINT requires advance notification prior to performing the activity.

(3): The DISTRICT/PQACT inspection form / checklist is to be completed by the Contractor and member of the District/PQACT prior to the start of work. The inspection form/ checklist shall show no incompletions.

LEVEL 1 = CONTINUOUS INSPECTION OF ACTIVITIES, LEVEL 2 = MONITOR CRITICAL ACTIVITIES AND WITNESS TESTING, LEVEL 3 = RANDOM INSPECTION AND/OR AT COMPLETION OF WORK, LEVEL 4 = REVIEW OF PRECONSTRUCTION DOCUMENTATION, LEVEL 5 - REVIEW OF FINAL DOCUMENTS

CQC = CONTRACTOR QUALITY CONTROL SDQC = SPECIALIZED DISCIPLINE D = DISTRICT/PQACT ER = ENGINEER OF RECORD MCT = MANUFACTURER CERTIFICATION/TESTING

Approved By District/PQACT QA Manager: *DRoy Moseley* ***Date:*** *20July2018*

INSPECTION / TEST PLAN (ITP)
C-43 WEST BASIN STORAGE RESERVOIR
CONTRACT NUMBER: CN XXXXXXXXXX
CIVIL WORKS

Location: Hendry County, FL
Date Prepared:
Revision:
Contractor: **Prepared By:**

BOAT RAMPS
Spec. Section: 03 31 01.00 10, 03 11 13.00 10, 03 20 00.00 10, 03 35 00.00 10

Item No.	Attribute / Activity Description	Acceptance Criteria (Codes, Std., Spec., Drawings, Etc.)	INSPECTION REQUIREMENTS			Forms / Records / References (3)	Comments
			Inspect	Hold (1)	Notify (2)		
1	PRE-CONSTRUCTION						
1.1	Contractor's Quality Control Plan, Site Health & Safety Plan and Permits	Quality Control 01 45 00, Safety Requirements 01 35 26, Permits & Fees 00 31 46	D-L4	D-L4		Plans and Permits	Plans have been submitted by Contractor and approved by the District/PQACT. All pemits have been obtained to begin work.
1.2	Preconstruction Submittals	Submittals 01 33 00 03 31 01.00 10, 03 11 13.00 10, 03 20 00.00 10, 03 35 00.00 10	D-L4, ER-L4	D-L4, ER-L4		Transmittal 01 45 00.3.10.1. & Appen. C, Submittals 01 45 00.3.10.1. & Appen. C, Submittal Register	All preconstruction submittals for this DFOW shall be submitted by the Contractor and Approved by the District/PQACT.
1.3	Request For Information (RFIs)	Quality Control 01 45 00	D-L4, ER-L4	D-L4, ER-L4		Request for Information & Log 01 45 00.3.10.1 & Appen. C	All RFIs for this DFOW shall be answered in order to clear up any questions before work begins.
1.4	Work Plans	Quality Control 01 45 00	D-L4, ER-L4	D-L4, ER-L4		Plans	All work plans for this DFOW shall be submitted by the Contractor and approved by the District/PQACT.
1.5	Activity Hazard Analysis (AHA)	Safety Requirements 01 35 26	D-L4, ER-L4	D-L4, ER-L4		AHA 01 45 00.3.10.1 & Appen. C	The AHA for this DFOW have been submitted by the Contractor.
1.6	Previous Work Deficiencies & Non-Conformances of previous DFOW	Quality Control 01 45 00	CQC-L5, SDQC-L5, D-L5, ER-L5, MCT-L5	D-L4, ER-L4		Deficiency Logs and NCN Logs 01 45 00.3.10.1 & Appen. C	All deficiencies and non-conformances shall be corrected of previous work in order to avoid covering deficiencies.
1.7	Final Follow-up Control Phase Inspection of previous DFOW	Quality Control 01 45 00	CQC-L5, SDQC-L5, D-L5, ER-L5, MCT-L5	D-L4, ER-L4	48 Hours	Final Follow-up Control Phase Inspection Checklist & Punch-Out	Final Follow-up Control Phase Inspection checklist & punch out items shall be completed of previous work.
1.8	Preparatory Control Phase Inspection	Quality Control 01 45 00	CQC-L5, SDQC-L5, D-L5, ER-L5, MCT-L5	D-L4, ER-L4	48 Hours	Preparatory Control Phase Inspection Worksheet 01 45 00.3.10.1 & Appen. C	Preparatory Control Phase Inspection/Meeing shall be performed successfully without open issues.
2	CONSTRUCTION						
2.1	Initial Control Phase Inspection	01 45 00, 3.7.2	CQC-L5, SDQC-L5, D-L5, ER-L5,	D-L5, ER-L5	provide agenda > 48 hours prior to meeting	Initial Control Phase Inspection Checklist 01 45 00.3.10.1, & Specifications Appendix C	An Initial Control Phase Inspection shall be performed shortly after the DFOW has begun to determine if the DFOW plan is working and if the workmanship of the workers is satisfactory and meets safety standards.
2.2	Daily Follow-up Control Phase Inspections	01 45 00, 3.7.3	CQC-L1	N/A	N/A	Daily Quality Control Report/ Daily Activity Log (DQCR) 01 45 00.3.10.1 & Specifications Appendix C	Contractor to perform daily Follow-up Control Phase Inspections and document findings on DQCR.
	Air Content	03 31 01.00 10, 1.2.1	`	D-L5, ER-L5		Daily Quality Control Report/ Daily Activity Log (DQCR) 01 45 00.3.10.1 & Specifications Appendix C	Air content shall be between 4 and 7 percent as delivered to the forms and as determined by ASTM C231/C231M, except that when the nominal maximum size coarse aggregate is 3/4 inch, between 4.5 and 7.5 percent.
	Slump	03 31 01.00 10, 1.2.2	CQC-L5, SDQC-L5, D-L5, ER-L5,	D-L5, ER-L5		Daily Quality Control Report/ Daily Activity Log (DQCR) 01 45 00.3.10.1 & Specifications Appendix C	The slump shall be within the range of 1 to 4 inches as determined in accordance with ASTM C143/C143M. Where placement by pump is approved, the slump must not exceed 6 inches.
	Concrete Strength	03 31 01.00 10, 1.2.3	CQC-L5, SDQC-L5, D-L5, ER-L5,	D-L5, ER-L5		Daily Quality Control Report/ Daily Activity Log (DQCR) 01 45 00.3.10.1 & Specifications Appendix C	4,500 @ 28 days

3	ACCEPTANCE						
3.1	Deficiencies & Non-Conformances of this DFOW	Quality Control 01 45 00	CQC-5, SDQC-5, D-5, ER-5, MCT-5	D-L5, ER-L4		Deficiency Logs and NCN Logs 01 45 00.3.10.1 & Appendix C	All deficiencies and non-conformances have been corrected of work in order to avoid covering deficiencies.
3.2	Final Follow-up Control Phase Inspection	01 45 00, 3.9.3	CQC-L5, D-L5, ER-L5,	D-L5, ER-L5	provide agenda > 48 hours prior to meeting	Final Follow-up Control Phase Inspection Checklist & Punch-Out 01 45 00.3.10.1 & Specifications Appendix C	Final Follow-up Control Phase Inspection checklist & punch out items have been completed.

(1): A HOLD POINT is a mandatory requirement - advance notification and acceptance (verbal/written) is required prior to continuing work.

(2): A NOTIFY POINT requires advance notification prior to performing the activity.

(3): The DISTRICT/PQACT inspection form / checklist is to be completed by the Contractor and member of the District/PQACT prior to the start of work. The inspection form/ checklist shall show no incompletions.

LEVEL 1 = CONTINUOUS INSPECTION OF ACTIVITIES, LEVEL 2 = MONITOR CRITICAL ACTIVITIES AND WITNESS TESTING, LEVEL 3 = RANDOM INSPECTION AND/OR AT COMPLETION OF WORK, LEVEL 4 = REVIEW OF PRECONSTRUCTION DOCUMENTATION, LEVEL 5 - REVIEW OF FINAL DOCUMENTS

CQC = CONTRACTOR QUALITY CONTROL SDQC = SPECIALIZED DISCIPLINE D = DISTRICT/PQACT ER = ENGINEER OF RECORD MCT = MANUFACTURER CERTIFICATION/TESTING

Approved By District/PQACT QA Manager: *DRoy Moseley* ***Date:*** *28July2018*

INSPECTION / TEST PLAN (ITP)
C-43 WEST BASIN STORAGE RESERVOIR
CONTRACT NUMBER: CN XXXXXXXXXX
CIVIL WORKS

Location: Hendry County, FL
Date Prepared:
Revision:
Contractor: **Prepared By:**

SITE UTILITIES
Spec. Section: 33 40 00

Item No.	Attribute / Activity Description	Acceptance Criteria (Codes, Std., Spec., Drawings, Etc.)	INSPECTION REQUIREMENTS			Forms / Records / References (3)	Comments
			Inspect	Hold (1)	Notify (2)		
1	PRE-CONSTUCTION						
1.1	Contractor's Quality Control Plan, Site Health & Safety Plan and Permits	Quality Control 01 45 00, Safety Requirements 01 35 26, Permits & Fees 00 31 46	D-L4	D-L4		Plans and Permits	Plans have been submitted by Contractor and approved by the District/PQACT. All pemits have been obtained to begin work.
1.2	Preconstruction Submittals	Submittals 01 33 00 33 40 00	D-L4, ER-L4	D-L4, ER-L4		Transmittal 01 45 00.3.10.1. & Appen. C, Submittals 01 45 00.3.10.1. & Appen. C, Submittal Register	All preconstruction submittals for this DFOW shall be submitted by the Contractor and Approved by the District/PQACT.
1.3	Request For Information (RFIs)	Quality Control 01 45 00	D-L4, ER-L4	D-L4, ER-L4		Request for Information & Log 01 45 00.3.10.1 & Appen. C	All RFIs for this DFOW shall be answered in order to clear up any questions before work begins.
1.4	Work Plans	Quality Control 01 45 00	D-L4, ER-L4	D-L4, ER-L4		Plans	All work plans for this DFOW shall be submitted by the Contractor and approved by the District/PQACT.
1.5	Activity Hazard Analysis (AHA)	Safety Requirements 01 35 26	D-L4, ER-L4	D-L4, ER-L4		AHA 01 45 00.3.10.1 & Appen. C	The AHA for this DFOW have been submitted by the Contractor.
1.6	Previous Work Deficiencies & Non-Conformances of previous DFOW	Quality Control 01 45 00	CQC-L5, SDQC-L5, D-L5, ER-L5, MCT-L5	D-L4, ER-L4		Deficiency Logs and NCN Logs 01 45 00.3.10.1 & Appen. C	All deficiencies and non-conformances shall be corrected of previous work in order to avoid covering deficiencies.
1.7	Final Follow-up Control Phase Inspection of previous DFOW	Quality Control 01 45 00	CQC-L5, SDQC-L5, D-L5, ER-L5, MCT-L5	D-L4, ER-L4	48 Hours	Final Follow-up Control Phase Inspection Checklist & Punch-Out	Final Follow-up Control Phase Inspection checklist & punch out items shall be completed of previous work.
1.8	Preparatory Control Phase Inspection	Quality Control 01 45 00	CQC-L5, SDQC-L5, D-L5, ER-L5, MCT-L5	D-L4, ER-L4	48 Hours	Preparatory Control Phase Inspection Worksheet 01 45 00.3.10.1 & Appen. C	Preparatory Control Phase Inspection/Meeing shall be performed successfully without open issues.
2	CONSTRUCTION						
2.1	Initial Control Phase Inspection	01 45 00	CQC-L5, SDQC-L5, D-L5, ER-L5, MCT-L5	D-L4, ER-L4	provide agenda > 48 Hours prior to meeting	Initial Control Phase Inspection Agenda 01 45 00.1.10.1.13, Initial Control Phase Inspection Checklist	An Initial Control Phase Inspection shall be performed shortly after the DFOW has begun to determine if the DFOW plan is working and if the workmanship of the workers is satisfactory and meets safety standards.
2.2	Daily Follow-up Control Phase Inspections	01 45 00	CQC-L1			Daily Quality Control Report/ Daily Activity Log (DQCR) 01 45 00.3.10.1 & Appen. C	Contractor to perform daily Follow-up Control Phase Inspections and document findings on DQCR.
2.3	Concrete Pipe Requirements	33 40 00, 3.2.1	CQC-L1, SDQC-L1, D-L1, ER-L1,	D-L1, ER-L1		Daily Quality Control Report/ Daily Activity Log (DQCR) 01 45 00.3.10.1 & Appen. C	When no bedding class is specified or detailed on the drawings, concrete pipe shall be bedded in granular material minimum 4 inch in depth in trenches with soil foundation.
2.4	Concrete Pipe Requirements	33 40 00, 3.2.1	CQC-L1, SDQC-L1, D-L1, ER-L1,	D-L1, ER-L1		Daily Quality Control Report/ Daily Activity Log (DQCR) 01 45 00.3.10.1 & Appen. C	Depth of granular bedding in trenches with rock foundation shall be 1/2 inch in depth per foot of depth of fill, minimum depth of bedding shall be 8 inches up to maximum depth of 24 inches. The middle third of the granular bedding shall be loosely placed.
2.5	PLACING PIPE	33 40 00, 3.3	CQC-L1, SDQC-L1, D-L1, ER-L1,	D-L1, ER-L1		Daily Quality Control Report/ Daily Activity Log (DQCR) 01 45 00.3.10.1 & Appen. C	Maximum deflection of the concrete pipe is 0 percent. Maximum allowable deflection of the PE pipe is 5 percent.
2.6	PLACING PIPE	33 40 00, 3.3	CQC-L1, SDQC-L1, D-L1, ER-L1,	D-L1, ER-L1		Daily Quality Control Report/ Daily Activity Log (DQCR) 01 45 00.3.10.1 & Appen. C	Note post installation requirements of paragraph DEFLECTION TESTING in PART 3 of this specification for all pipe products including deflection testing requirements for flexible pipe.

2.7	Multiple Culverts	33 40 00, 3.3.3	CQC-L1, SDQC-L1, D-L1, ER-L1,	D-L1, ER-L1		Daily Quality Control Report/ Daily Activity Log (DQCR) 01 45 00.3.10.1 & Appen. C	Where multiple lines of pipe are installed, adjacent sides of pipe shall be at least half the nominal pipe diameter or 3 feet apart, whichever is less.
2.8	Backfilling Pipe in Trenches	33 40 00, 3.7.1	CQC-L1, SDQC-L1, D-L1, ER-L1,	D-L1, ER-L1		Daily Quality Control Report/ Daily Activity Log (DQCR) 01 45 00.3.10.1 & Appen. C	The backfill shall be brought up evenly on both sides of pipe for the full length of pipe. The fill shall be thoroughly compacted under the haunches of the pipe. Each layer shall be thoroughly compacted with mechanical tampers or rammers. This method of filling and compacting shall continue until the fill has reached an elevation equal to the midpoint (spring line) of concrete pipe or has reached an elevation of at least 12 inches above the top of the pipe for flexible pipe.
2.9	Backfilling Pipe in Trenches	33 40 00, 3.7.1	CQC-L1, SDQC-L1, D-L1, ER-L1,	D-L1, ER-L1		Daily Quality Control Report/ Daily Activity Log (DQCR) 01 45 00.3.10.1 & Appen. C	The remainder of the trench shall be backfilled and compacted by spreading and rolling or compacted by mechanical rammers or tampers in layers not exceeding 8 inches.
2.10	Backfilling Pipe in Fill Sections	33 40 00, 3.7.2	CQC-L1, SDQC-L1, D-L1, ER-L1,	D-L1, ER-L1		Daily Quality Control Report/ Daily Activity Log (DQCR) 01 45 00.3.10.1 & Appen. C	The fill material shall be uniformly spread in layers longitudinally on both sides of the pipe, not exceeding 6 inches in compacted depth, and shall be compacted by rolling parallel with pipe or by mechanical tamping or ramming.
2.11	Backfilling Pipe in Fill Sections	33 40 00, 3.7.2	CQC-L1, SDQC-L1, D-L1, ER-L1,	D-L1, ER-L1		Daily Quality Control Report/ Daily Activity Log (DQCR) 01 45 00.3.10.1 & Appen. C	Prior to commencing normal filling operations, the crown width of the fill at a height of 12 inches above the top of the pipe shall extend a distance of not less than twice the outside pipe diameter on each side of the pipe or 12 feet, whichever is less.
2.12	Backfilling Pipe in Fill Sections	33 40 00, 3.7.2	CQC-L1, SDQC-L1, D-L1, ER-L1,	D-L1, ER-L1		Daily Quality Control Report/ Daily Activity Log (DQCR) 01 45 00.3.10.1 & Appen. C	After the backfill has reached at least 12 inches above the top of the pipe, the remainder of the fill shall be placed and thoroughly compacted in layers not exceeding 8 inches. Use select granular material for this entire region of backfill for flexible pipe installations.
2.13	Minimum Density	33 40 00, 3.7.4.2	CQC-L1, SDQC-L1, D-L1, ER-L1,	D-L1, ER-L1		Daily Quality Control Report/ Daily Activity Log (DQCR) 01 45 00.3.10.1 & Appen. C	Under paved roads, streets, parking areas, and similar use pavements including adjacent shoulder areas, the density shall be not less than 90 percent of maximum density for cohesive material and 95 percent of maximum density for cohesionless material, up to the elevation where requirements for pavement subgrade materials and compaction shall control.
2.14	Minimum Density	33 40 00, 3.7.4.2	CQC-L1, SDQC-L1, D-L1, ER-L1,	D-L1, ER-L1		Daily Quality Control Report/ Daily Activity Log (DQCR) 01 45 00.3.10.1 & Appen. C	Under unpaved or turfed traffic areas, density shall not be less than 90 percent of maximum density for cohesive material and 95 percent of maximum density for cohesionless material.
2.15	Minimum Density	33 40 00, 3.7.4.2	CQC-L1, SDQC-L1, D-L1, ER-L1,	D-L1, ER-L1		Daily Quality Control Report/ Daily Activity Log (DQCR) 01 45 00.3.10.1 & Appen. C	Under nontraffic areas, density shall be not less than that of the surrounding material.
2.16	HYDROSTATIC TEST ON WATERTIGHT JOINTS	33 40 00, 3.8.1.1	CQC-L4, SDQC-L4, D-L4, ER-L4, MCT-L4	D-L4, ER-L4	before gaskets or jointing materials are installed.	Transmittal 01 45 00.3.10.1. & Appen. C, Submittals 01 45 00.3.10.1. & Appen. C, Submittal Register	Watertight joints shall be tested and shall meet test requirements. Rubber gaskets shall comply with the oil resistant gasket requirements of ASTM C443. Certified copies of test results shall be delivered to the District
2.17	HYDROSTATIC TEST ON WATERTIGHT JOINTS	33 40 00, 3.8.1.1	CQC-L4, SDQC-L4, D-L4, ER-L4, MCT-L4	D-L4, ER-L4	before gaskets or jointing materials are installed.	Transmittal 01 45 00.3.10.1. & Appen. C, Submittals 01 45 00.3.10.1. & Appen. C, Submittal Register	A hydrostatic test shall be made on the watertight joint types as specified. Only one sample joint for each run of pipe of each type and size needs testing; however, if the sample joint fails because of faulty design or workmanship, an additional sample joint may be tested.
2.18	Leakage Test	33 40 00, 3.8.1.2	CQC-L2, SDQC-L2, D-L2, ER-L2	D-L2, ER-L2		Transmittal 01 45 00.3.10.1. & Appen. C, Submittals 01 45 00.3.10.1. & Appen. C, Submittal Register	Lines shall be tested for leakage by low pressure air or water testing or exfiltration tests, as appropriate, prior to completing backfill.

2.19	Determination of Density	33 40 00, 3.8.1.3	CQC-L2, SDQC-L2, D-L2, ER-L2	D-L2, ER-L2		Transmittal 01 45 00.3.10.1. & Appen. C, Submittals 01 45 00.3.10.1. & Appen. C, Submittal Register	Perform a minimum of one (1) test per run of pipe. Laboratory tests for moisture-density relations shall be made in accordance with ASTM D1557 except that mechanical tampers may be used provided the results are correlated with those obtained with the specified hand tamper. Field density tests shall be determined in accordance with ASTM D2167 or ASTM D6938.
2.20	Deflection Testing	33 40 00, 3.8.1.4	CQC-L2, SDQC-L2, D-L2, ER-L2	D-L2, ER-L2		Transmittal 01 45 00.3.10.1. & Appen. C, Submittals 01 45 00.3.10.1. & Appen. C, Submittal Register	Conduct deflection test no sooner than 30 days after completion of final backfill and compaction testing as specified.
2.21	Laser Profiler	33 40 00, 3.8.1.4.1	CQC-L2, SDQC-L2, D-L2, ER-L2	D-L2, ER-L2		Transmittal 01 45 00.3.10.1. & Appen. C, Submittals 01 45 00.3.10.1. & Appen. C, Submittal Register	Inspect pipe interior with laser profiling equipment as specified
2.22	Mandrel	33 40 00, 3.8.1.4.2	CQC-L2, SDQC-L2, D-L2, ER-L2	D-L2, ER-L2		Transmittal 01 45 00.3.10.1. & Appen. C, Submittals 01 45 00.3.10.1. & Appen. C, Submittal Register	Pass the mandrel through each run of pipe by pulling it by hand as specified
2.23	Warranty Period Test	33 40 00,	CQC-L2, SDQC-L2, D-L2, ER-L2	D-L2, ER-L2		Transmittal 01 45 00.3.10.1. & Appen. C, Submittals 01 45 00.3.10.1. & Appen. C, Submittal Register	Inspect 100 percent of all pipe systems under the travel lanes. Random inspections of the remaining pipe system outside of the travel lanes shall represent at least 10 percent of the total pipe footage of each pipe size. Inspections shall be made, depending on the pipe size, with videocamera or visual observations.
2.24	Warranty Period Test	33 40 00,	CQC-L2, SDQC-L2, D-L2, ER-L2	D-L2, ER-L2		Transmittal 01 45 00.3.10.1. & Appen. C, Submittals 01 45 00.3.10.1. & Appen. C, Submittal Register	For flexible pipe installations, perform deflection testing on 100 percent of all pipes under the travel lanes, including curb and gutter, with either a laser profiler or 9-fin mandrel. For flexible pipe, random deflection inspections of the pipe system outside of the travel lanes shall represent at least 10 percent of the total pipe footage of each pipe size.
2.25	Warranty Period Test	33 40 00,	CQC-L2, SDQC-L2, D-L2, ER-L2	D-L2, ER-L2		Transmittal 01 45 00.3.10.1. & Appen. C, Submittals 01 45 00.3.10.1. & Appen. C, Submittal Register	When mandrels are utilized to verify deflection of flexible pipe products during the final post installation inspection, the District will verify the mandrel OD through the use of proving rings.
3	**ACCEPTANCE**						
3.1	As-built Drawings; Sanitation Sewer System , storm drainage pipe system	33 30 00, 3.3.3	CQC-L5, D-L5, ER-L5				
3.2	Post-construction Inspection of the sanitary sewer system	33 30 00, 3.3.2	CQC-L3, D-L3, ER-L3		>2 weeks before planned inspection		
3.3	Post-Installation Inspection of the storm drainage pipe system	33 40 00, 3.8.4	CQC-L3, D-L3, ER-L3				
3.4	Final Follow-up Control Phase Inspection	01 45 00	CQC-L5, D-L5, ER-L5,	D-L5, ER-L5	provide agenda > 48 Hours prior to meeting		Final Follow-up Control Phase Inspection checklist & punch out items have been completed.

(1): A HOLD POINT is a mandatory requirement - advance notification and acceptance (verbal/written) is required prior to continuing work.
(2): A NOTIFY POINT requires advance notification prior to performing the activity.
(3): The DISTRICT/PQACT inspection form / checklist is to be completed by the Contractor and member of the District/PQACT prior to the start of work. The inspection form/ checklist shall show no incompletions.

LEVEL 1 = CONTINUOUS INSPECTION OF ACTIVITIES, LEVEL 2 = MONITOR CRITICAL ACTIVITIES AND WITNESS TESTING, LEVEL 3 = RANDOM INSPECTION AND/OR AT COMPLETION OF WORK, LEVEL 4 = REVIEW OF PRECONSTRUCTION DOCUMENTATION, LEVEL 5 - REVIEW OF FINAL DOCUMENTS

CQC = CONTRACTOR QUALITY CONTROL SDQC = SPECIALIZED DISCIPLINE D = DISTRICT/PQACT ER = ENGINEER OF RECORD MCT = MANUFACTURER CERTIFICATION/TESTING

Approved By District/PQACT QA Manager: *D Roy Moseley* ***Date:*** *28July2018*

INSPECTION / TEST PLAN (ITP)
C-43 WEST BASIN STORAGE RESERVOIR
CONTRACT NUMBER: CN XXXXXXXXXX
CIVIL WORKS

Location: Hendry County, FL

Date Prepared:

Revision:

Contractor: **Prepared By:**

Stone Rip Rap (Channel Protection)
Spec. Section: 31 05 19, 35 31 19

Item No.	Attribute / Activity Description	Acceptance Criteria (Codes, Std., Spec., Drawings, Etc.)	INSPECTION REQUIREMENTS			Forms / Records / References (3)	Comments
			Inspect	Hold (1)	Notify (2)		
1	PRE-CONSTRUCTION						
1.1	Contractor's Quality Control Plan, Site Health & Safety Plan and Permits	Quality Control 01 45 00, Safety Requirements 01 35 26, Permits & Fees 00 31 46	D-L4	D-L4		Plans and Permits	Plans have been submitted by Contractor and approved by the District/PQACT. All pemits have been obtained to begin work.
1.2	Preconstruction Submittals	Submittals 01 33 00 31 05 19, 35 31 19	D-L4, ER-L4	D-L4, ER-L4		Transmittal 01 45 00.3.10.1. & Appen. C, Submittals 01 45 00.3.10.1. & Appen. C, Submittal Register	All preconstruction submittals for this DFOW shall be submitted by the Contractor and Approved by the District/PQACT.
1.3	Request For Information (RFIs)	Quality Control 01 45 00	D-L4, ER-L4	D-L4, ER-L4		Request for Information & Log 01 45 00.3.10.1 & Appen. C	All RFIs for this DFOW shall be answered in order to clear up any questions before work begins.
1.4	Work Plans	Quality Control 01 45 00	D-L4, ER-L4	D-L4, ER-L4		Plans	All work plans for this DFOW shall be submitted by the Contractor and approved by the District/PQACT.
1.5	Activity Hazard Analysis (AHA)	Safety Requirements 01 35 26	D-L4, ER-L4	D-L4, ER-L4		AHA 01 45 00.3.10.1 & Appen. C	The AHA for this DFOW have been submitted by the Contractor.
1.6	Previous Work Deficiencies & Non-Conformances of previous DFOW	Quality Control 01 45 00	CQC-L5, SDQC-L5, D-L5, ER-L5, MCT-L5	D-L4, ER-L4		Deficiency Logs and NCN Logs 01 45 00.3.10.1 & Appen. C	All deficiencies and non-conformances shall be corrected of previous work in order to avoid covering deficiencies.
1.7	Final Follow-up Control Phase Inspection of previous DFOW	Quality Control 01 45 00	CQC-L5, SDQC-L5, D-L5, ER-L5, MCT-L5	D-L4, ER-L4	48 Hours	Final Follow-up Control Phase Inspection Checklist & Punch-Out	Final Follow-up Control Phase Inspection checklist & punch out items shall be completed of previous work.
1.8	Preparatory Control Phase Inspection	Quality Control 01 45 00	CQC-L5, SDQC-L5, D-L5, ER-L5, MCT-L5	D-L4, ER-L4	48 Hours	Preparatory Control Phase Inspection Worksheet 01 45 00.3.10.1 & Appen. C	Preparatory Control Phase Inspection/Meeing shall be performed successfully without open issues.
1.9	GEOTEXTILE - WARRANTY	31 05 19, 1.5	CQC-L4, SDQC-L4, D-L4, ER-L4, MCT-L4	D-L4, ER-L4		Transmittal 01 45 00.3.10.1. & Appen. C, Submittals 01 45 00.3.10.1. & Appen. C, D Submittal Register	The warranty shall meet the requirements specified in Section 01 61 03 EQUIPMENT AND MATERIALS.
1.10	GEOTEXTILE - DELIVERY, STORAGE, AND HANDLING	31 05 19, 1.6	CQC-L4, SDQC-L4, D-L4, ER-L4, MCT-L4	D-L4, ER-L4		Daily Quality Control Report/ Daily Activity Log (DQCR) 01 45 00.3.10.1 & Appen. C	Deliver, store, and handle geotextile in accordance with ASTM D4873/D4873M.
1.11	GEOTEXTILE - Delivery	31 05 19, 1.6.1	CQC-L4, SDQC-L4, D-L4, ER-L4, MCT-L4	D-L4, ER-L4		Daily Quality Control Report/ Daily Activity Log (DQCR) 01 45 00.3.10.1 & Appen. C	Notify the District a minimum of 24 hours prior to delivery and unloading of geotextile rolls packaged in an opaque, waterproof, protective plastic wrapping. The plastic wrapping shall not be removed until deployment. If quality assurance samples are collected, immediately
1.12	GEOTEXTILE - Storage	31 05 19, 1.6.2	CQC-L4, SDQC-L4, D-L4, ER-L4, MCT-L4	D-L4, ER-L4		Daily Quality Control Report/ Daily Activity Log (DQCR) 01 45 00.3.10.1 & Appen. C	Protect rolls of geotextile from construction equipment, chemicals, sparks and flames, temperatures in excess of 160 degrees F, or any other environmental condition that may damage the physical properties of the geotextile. To protect geotextile from becoming saturated, either
1.13	GEOTEXTILE - Handling	31 05 19, 1.6.3	CQC-L4, SDQC-L4, D-L4, ER-L4, MCT-L4	D-L4, ER-L4		Daily Quality Control Report/ Daily Activity Log (DQCR) 01 45 00.3.10.1 & Appen. C	Handle and unload geotextile rolls with load carrying straps, a fork lift with a stinger bar, or an axial bar assembly. Rolls shall not be dragged along the ground, lifted by one end, or dropped to the ground.
1.14	GEOTEXTILE - RAW MATERIALS	31 05 19, 2.1	CQC-L4, SDQC-L4, D-L4, ER-L4, MCT-L4	D-L4, ER-L4		Transmittal 01 45 00.3.10.1. & Appen. C, Submittals 01 45 00.3.10.1. & Appen. C, D Submittal Register	A minimum of 7 days prior to scheduled use, submit Manufacturer's certificate of compliance stating that the geotextile meets the requirements of this section.

2	CONSTRUCTION						
2.1	Initial Control Phase Inspection	01 45 00	CQC-L5, SDQC-L5, D-L5, ER-L5, MCT-L5	D-L4, ER-L4	provide agenda > 48 Hours prior to meeting	Initial Control Phase Inspection Agenda 01 45 00.1.10.1.13, Initial Control Phase Inspection Checklist	An Initial Control Phase Inspection shall be performed shortly after the DFOW has begun to determine if the DFOW plan is working and if the workmanship of the workers is satisfactory and meets safety standards.
2.2	Daily Follow-up Control Phase Inspections	01 45 00	CQC-L1			Daily Quality Control Report/ Daily Activity Log (DQCR) 01 45 00.3.10.1 & Appen. C	Contractor to perform daily Follow-up Control Phase Inspections and document findings on DQCR.
2.3	Subgrade Preparation	31 05 19, 3.2.1	CQC-L1, SDQC-L1, D-L1, ER-L1, MCT-L1	D-L1, ER-L1		Daily Quality Control Report/ Daily Activity Log (DQCR) 01 45 00.3.10.1 & Appen. C	The surface underlying the geotextile shall be smooth and free of ruts or protrusions which could damage the geotextile. Subgrade materials and compaction requirements shall be in accordance with Section 31 00 00.
2.4	Geotextile Layout Plan	31 05 19, 3.2.1	CQC-L1, SDQC-L1, D-L1, ER-L1, MCT-L1	D-L1, ER-L1		Daily Quality Control Report/ Daily Activity Log (DQCR) 01 45 00.3.10.1 & Appen. C	The Contractor will provide a geotextile layout plan detailing proposed size, number, position, and sequence of geotextile rolls and direction of all field seams subject to District approval before commencement of Geotextile installation.
2.5	Quality Assurance Samples	31 05 19, 3.1.1	CQC-L4, SDQC-L4, D-L4, ER-L4, MCT-L4	D-L4, ER-L4		Daily Quality Control Report/ Daily Activity Log (DQCR) 01 45 00.3.10.1 & Appen. C	Provide assistance (access or physical samples) to the District in the collection of quality assurance samples for quality assurance testing; assign 7 days in the schedule to allow for testing.
2.6	PLACEMENT OF BEDDING LAYERS	35 31 19, 3.4.1	CQC-L1, SDQC-L1, D-L1, ER-L1, MCT-L1	D-L1, ER-L1		Daily Quality Control Report/ Daily Activity Log (DQCR) 01 45 00.3.10.1 & Appen. C	A bedding layer shall be placed on the prepared base as described below, in accordance with the details shown on the contract drawings, and within the limits shown on the contract drawings or staked in the field. A tolerance of plus 2 inches and minus 1 inch from the lines and grades shown on the contract drawings will be allowed in the finished surface of the bedding, except that the extreme of this tolerance shall not be continuous over an area greater than 200 square feet.
2.7	Methods and Equipment	35 31 19, 3.1.1	CQC-L4, SDQC-L4, D-L4, ER-L4, MCT-L4	D-L4, ER-L4		Daily Quality Control Report/ Daily Activity Log (DQCR) 01 45 00.3.10.1 & Appen. C	Methods and equipment employed for placement shall demonstrate the adequacy for use in placement of geotextile material, bedding stone and riprap and shall conform with the requirements specified. The quantities of all materials placed within the section shall be accurately tabulated and provided immediately to the District for comparison with computed quantities.
2.8	Demonstration Section Evaluation	35 31 19, 3.1	CQC-L4, SDQC-L4, D-L4, ER-L4, MCT-L4	D-L4, ER-L4		Daily Quality Control Report/ Daily Activity Log (DQCR) 01 45 00.3.10.1 & Appen. C	Prior to placement of stone, construct a section of riprap protection consisting of geotextile material, bedding stone and riprap to demonstrate proposed operations for production placement. The section shall demonstrate procedures and capability of grading, placing geotextile material, bedding stone and riprap within the tolerances specified. The demonstration section shall be 20 feet x 20 feet minimum and shall conform to all applicable specifications.
2.9	Demonstration Section Evaluation	35 31 19, 3.1.2	CQC-L4, SDQC-L4, D-L4, ER-L4, MCT-L4	D-L4, ER-L4		Daily Quality Control Report/ Daily Activity Log (DQCR) 01 45 00.3.10.1 & Appen. C	Do not proceed with placing riprap protection prior to the approval of the demonstration section. Within a period of 7 days after completion of the section, the District shall determine the adequacy of the section to function as part of the permanent construction. The Contractor will be notified as to the acceptability of the section and may be directed to modify methods of construction, and remove the section if necessary.
2.10	BASE PREPARATION	35 31 19, 3.2	CQC-L4, SDQC-L4, D-L4, ER-L4, MCT-L4	D-L4, ER-L4		Daily Quality Control Report/ Daily Activity Log (DQCR) 01 45 00.3.10.1 & Appen. C	Areas above the water level on which geotextile, bedding material and riprap are to be placed shall be graded and/or dressed to conform to cross sections shown on the contract drawings within an allowable tolerance of plus 2 inches and minus 4 inches from the theoretical lines and grades. The prepared base shall be approved by the District.

2.11	Above Water	35 31 19, 3.5.2	CQC-L1, SDQC-L1, D-L1, ER-L1, MCT-L1	D-L1, ER-L1		Daily Quality Control Report/ Daily Activity Log (DQCR) 01 45 00.3.10.1 & Appen. C	A tolerance of plus 4 inches and minus 9 inches from the slope lines and grades shown on the contract drawings will be allowed in the finished surface of the riprap, except that the extreme of this tolerance shall not be continuous over an area greater than 200 square feet.
2.12	Above Water	35 31 19, 3.5.2	CQC-L1, SDQC-L1, D-L1, ER-L1, MCT-L1	D-L1, ER-L1		Daily Quality Control Report/ Daily Activity Log (DQCR) 01 45 00.3.10.1 & Appen. C	The average tolerance of the entire job shall have no more than 50 percent of the tolerances specified above.
2.13	Under Water	35 31 19, 3.5.3	CQC-L1, SDQC-L1, D-L1, ER-L1, MCT-L1	D-L1, ER-L1		Daily Quality Control Report/ Daily Activity Log (DQCR) 01 45 00.3.10.1 & Appen. C	When riprap is placed under water onto geotextile it may be dropped from the water surface if the water depth over the geotextile is greater than 5 feet. Riprap placed in the wet shall be placed evenly. Prior to starting work, submit the proposed method of placing riprap under water.
2.14	MAINTENANCE	35 31 19, 3.6	CQC-L1, SDQC-L1, D-L1, ER-L1, MCT-L1	D-L1, ER-L1		Daily Quality Control Report/ Daily Activity Log (DQCR) 01 45 00.3.10.1 & Appen. C	The Contractor shall maintain the riprap until accepted by the District. The Contractor shall replace riprap displaced by any cause prior to acceptance.
2.15	Riprap Stockpile	35 31 19, 2.2.1.5	CQC-L4, SDQC-L4, D-L4, ER-L4, MCT-L4	D-L4, ER-L4		Daily Quality Control Report/ Daily Activity Log (DQCR) 01 45 00.3.10.1 & Appen. C	If the Contractor elects to provide off-site stockpiling areas, the District shall be notified of all such areas. The Contractor's stockpile shall be a maximum of 12 feet high and formed by a series of layers of truckload dumps, where the rock essentially remains where it is placed.
2.16	Evaluation Testing of Stone - Bulk Specific Gravity Range	35 31 19, 2.2.1.1	CQC-L4, SDQC-L4, D-L4, ER-L4, MCT-L4	D-L4, ER-L4		Transmittal 01 45 00.3.10.1. & Appen. C, Submittals 01 45 00.3.10.1. & Appen. C, D Submittal Register	Based upon water having a unit weight of 62.4 pounds per cubic foot, all limestone rock shall have a minimum bulk specific gravity, saturated surface dry (SSD), of 2.25 and all granite rock shall have a bulk specific gravity, saturated surface dry (SSD), of 2.65. The method of test for bulk specific gravity (SSD) shall be ASTM C127.
2.17	Evaluation Testing of Stone - Absorption	35 31 19, 2.2.1.1	CQC-L4, SDQC-L4, D-L4, ER-L4, MCT-L4	D-L4, ER-L4		Transmittal 01 45 00.3.10.1. & Appen. C, Submittals 01 45 00.3.10.1. & Appen. C, D Submittal Register	The stone shall have an absorption less than 5.0 percent unless other tests and service records show that the stone is satisfactory. The method of test for unit weight and absorption shall be ASTM C127.
2.18	Evaluation Testing of Stone - Petrographic Examination	35 31 19, 2.2.1.1	CQC-L4, SDQC-L4, D-L4, ER-L4, MCT-L4	D-L4, ER-L4		Transmittal 01 45 00.3.10.1. & Appen. C, Submittals 01 45 00.3.10.1. & Appen. C, D Submittal Register	Stone shall be evaluated in accordance with ASTM C295/C295M which shall include information required by ASTM D4992, paragraph 10. COE CRD-C 148 shall be used to perform Ethylene glycol tests required on rocks containing smectite as specified in ASTM D4992 and on samples identified to contain swelling clays.
2.19	Evaluation Testing of Stone - Resistance to Freezing and Thawing	35 31 19, 2.2.1.1	CQC-L4, SDQC-L4, D-L4, ER-L4, MCT-L4	D-L4, ER-L4		Transmittal 01 45 00.3.10.1. & Appen. C, Submittals 01 45 00.3.10.1. & Appen. C, D Submittal Register	Resistance to Freezing and Thawing. Stone shall have a maximum loss of 10 percent after the number of cycles specified in ASTM D5312/D5312M, Figure 1, when determining the durability of stone when subjected to freezing and thawing in accordance with ASTM D5312/D5312M, except the surface area of one side of the sample shall be between 144 and 2304 square inches.
2.20	Evaluation Testing of Stone - Resistance of Rock to Wetting and Drying	35 31 19, 2.2.1.1	CQC-L4, SDQC-L4, D-L4, ER-L4, MCT-L4	D-L4, ER-L4		Transmittal 01 45 00.3.10.1. & Appen. C, Submittals 01 45 00.3.10.1. & Appen. C, D Submittal Register	Resistance of Rock to Wetting and Drying. Stone shall have a maximum loss of 1 percent when determining the durability of stone subject to wetting and drying in accordance with ASTM D5313/D5313M, except the surface area of one side of the sample shall be between 144 and 2304 square inches.
2.21	Evaluation Testing of Stone -	35 31 19, 1.5.1.3	CQC-L4, SDQC-L4, D-L4, ER-L4, MCT-L4	D-L4, ER-L4		Transmittal 01 45 00.3.10.1. & Appen. C, Submittals 01 45 00.3.10.1. & Appen. C, D Submittal Register	Perform two tests of each category on each 2,500 ton of stockpiled material.
3	**ACCEPTANCE**						
3.1	Final Follow-up Control Phase Inspection	01 45 00	CQC-L5, D-L5, ER-L5,	D-L5, ER-L5	provide agenda > 48 Hours prior to meeting	Final Follow-up Control Phase Inspection Checklist & Punch-Out	Final Follow-up Control Phase Inspection checklist & punch out items have been completed.

(1): A HOLD POINT is a mandatory requirement - advance notification and acceptance (verbal/written) is required prior to continuing work.

(2): A NOTIFY POINT requires advance notification prior to performing the activity.
(3): The DISTRICT/PQACT inspection form / checklist is to be completed by the Contractor and member of the District/PQACT prior to the start of work. The inspection form/ checklist shall show no incompletions.

LEVEL 1 = CONTINUOUS INSPECTION OF ACTIVITIES, LEVEL 2 = MONITOR CRITICAL ACTIVITIES AND WITNESS TESTING, LEVEL 3 = RANDOM INSPECTION AND/OR AT COMPLETION OF WORK, LEVEL 4 = REVIEW OF PRECONSTRUCTION DOCUMENTATION, LEVEL 5 - REVIEW OF FINAL DOCUMENTS

CQC = CONTRACTOR QUALITY CONTROL SDQC = SPECIALIZED DISCIPLINE D = DISTRICT/PQACT ER = ENGINEER OF RECORD MCT = MANUFACTURER CERTIFICATION/TESTING

Approved By District/PQACT QA Manager: *D Roy Moseley* ***Date:*** *28July2018*

INSPECTION / TEST PLAN (ITP)
C-43 WEST BASIN STORAGE RESERVOIR
CONTRACT NUMBER: CN XXXXXXXXXX
CIVIL WORKS

Location: Hendry County, FL
Date Prepared:
Revision:
Contractor: **Prepared By:**

REVETMENT
Spec. Section: 31 05 19, 35 31 19.20

Item No.	Attribute / Activity Description	Acceptance Criteria (Codes, Std., Spec., Drawings, Etc.)	INSPECTION REQUIREMENTS			Forms / Records / References (3)	Comments
			Inspect	Hold (1)	Notify (2)		
1	PRE-CONSTRUCTION						
1.1	Contractor's Quality Control Plan, Site Health & Safety Plan and Permits	Quality Control 01 45 00, Safety Requirements 01 35 26, Permits & Fees 00 31 46	D-L4	D-L4		Plans and Permits	Plans have been submitted by Contractor and approved by the District/PQACT. All pemits have been obtained to begin work.
1.2	Preconstruction Submittals	Submittals 01 33 00 31 05 19, 35 31 19.20	D-L4, ER-L4	D-L4, ER-L4		Transmittal 01 45 00.3.10.1. & Appen. C, Submittals 01 45 00.3.10.1. & Appen. C, Submittal Register	All preconstruction submittals for this DFOW shall be submitted by the Contractor and Approved by the District/PQACT.
1.3	Request For Information (RFIs)	Quality Control 01 45 00	D-L4, ER-L4	D-L4, ER-L4		Request for Information & Log 01 45 00.3.10.1 & Appen. C	All RFIs for this DFOW shall be answered in order to clear up any questions before work begins.
1.4	Work Plans	Quality Control 01 45 00	D-L4, ER-L4	D-L4, ER-L4		Plans	All work plans for this DFOW shall be submitted by the Contractor and approved by the District/PQACT.
1.5	Activity Hazard Analysis (AHA)	Safety Requirements 01 35 26	D-L4, ER-L4	D-L4, ER-L4		AHA 01 45 00.3.10.1 & Appen. C	The AHA for this DFOW have been submitted by the Contractor.
1.6	Previous Work Deficiencies & Non-Conformances of previous DFOW	Quality Control 01 45 00	CQC-L5, SDQC-L5, D-L5, ER-L5, MCT-L5	D-L4, ER-L4		Deficiency Logs and NCN Logs 01 45 00.3.10.1 & Appen. C	All deficiencies and non-conformances shall be corrected of previous work in order to avoid covering deficiencies.
1.7	Final Follow-up Control Phase Inspection of previous DFOW	Quality Control 01 45 00	CQC-L5, SDQC-L5, D-L5, ER-L5, MCT-L5	D-L4, ER-L4	48 Hours	Final Follow-up Control Phase Inspection Checklist & Punch-Out	Final Follow-up Control Phase Inspection checklist & punch out items shall be completed of previous work.
1.8	Preparatory Control Phase Inspection	Quality Control 01 45 00	CQC-L5, SDQC-L5, D-L5, ER-L5, MCT-L5	D-L4, ER-L4	48 Hours	Preparatory Control Phase Inspection Worksheet 01 45 00.3.10.1 & Appen. C	Preparatory Control Phase Inspection/Meeing shall be performed successfully without open issues.
1.4	GEOTEXTILE - WARRANTY	31 05 19, 1.5	CQC-L4, SDQC-L4, D-L4, ER-L4, MCT-L4	D-L4, ER-L4		Transmittal 01 45 00.3.10.1. & Appen. C, Submittals 01 45 00.3.10.1. & Appen. C, D Submittal Register	The warranty shall meet the requirements specified in Section 01 61 03 EQUIPMENT AND MATERIALS.
1.5	GEOTEXTILE - DELIVERY, STORAGE, AND HANDLING	31 05 19, 1.6	CQC-L4, SDQC-L4, D-L4, ER-L4, MCT-L4	D-L4, ER-L4		Daily Quality Control Report/ Daily Activity Log (DQCR) 01 45 00.3.10.1 & Appen. C	Deliver, store, and handle geotextile in accordance with ASTM D4873/D4873M.
1.6	GEOTEXTILE - Delivery	31 05 19, 1.6.1	CQC-L4, SDQC-L4, D-L4, ER-L4, MCT-L4	D-L4, ER-L4		Daily Quality Control Report/ Daily Activity Log (DQCR) 01 45 00.3.10.1 & Appen. C	Notify the District a minimum of 24 hours prior to delivery and unloading of geotextile rolls packaged in an opaque, waterproof, protective plastic wrapping. The plastic wrapping shall not be removed until deployment. If quality assurance samples are collected, immediately rewrap rolls with the plastic wrapping. Geotextile or plastic wrapping damaged during storage or handling shall be repaired or replaced, as directed. Label each roll with the Manufacturer's name, geotextile type, roll number, roll dimensions (length, width, gross weight), and date manufactured.

1.7	GEOTEXTILE - Storage	31 05 19, 1.6.2	CQC-L4, SDQC-L4, D-L4, ER-L4, MCT-L4	D-L4, ER-L4		Daily Quality Control Report/ Daily Activity Log (DQCR) 01 45 00.3.10.1 & Appen. C	Protect rolls of geotextile from construction equipment, chemicals, sparks and flames, temperatures in excess of 160 degrees F, or any other environmental condition that may damage the physical properties of the geotextile. To protect geotextile from becoming saturated, either elevate rolls off the ground or place them on a sacrificial sheet of plastic in an area where water will not accumulate. Refer to manufacturer's requirements for protecting the geotextile fabric.
1.8	GEOTEXTILE - Handling	31 05 19, 1.6.3	CQC-L4, SDQC-L4, D-L4, ER-L4, MCT-L4	D-L4, ER-L4		Daily Quality Control Report/ Daily Activity Log (DQCR) 01 45 00.3.10.1 & Appen. C	Handle and unload geotextile rolls with load carrying straps, a fork lift with a stinger bar, or an axial bar assembly. Rolls shall not be dragged along the ground, lifted by one end, or dropped to the ground.
1.9	GEOTEXTILE - RAW MATERIALS	31 05 19, 2.1	CQC-L4, SDQC-L4, D-L4, ER-L4, MCT-L4	D-L4, ER-L4		Transmittal 01 45 00.3.10.1. & Appen. C, Submittals 01 45 00.3.10.1. & Appen. C, D Submittal Register	A minimum of 7 days prior to scheduled use, submit Manufacturer's certificate of compliance stating that the geotextile meets the requirements of this section.
1.10	MANUFACTURING QUALITY CONTROL SAMPLING AND TESTING	31 05 19, 2.2	CQC-L4, SDQC-L4, D-L4, ER-L4, MCT-L4	D-L4, ER-L4		Transmittal 01 45 00.3.10.1. & Appen. C, Submittals 01 45 00.3.10.1. & Appen. C, D Submittal Register	The Manufacturer is responsible for establishing and maintaining a quality control program to assure compliance with the requirements of the specification. A minimum of 7 days prior to scheduled use, submit Manufacturer's quality control manual.
1.11	MANUFACTURING QUALITY CONTROL SAMPLING AND TESTING	31 05 19, 2.2	CQC-L4, SDQC-L4, D-L4, ER-L4, MCT-L4	D-L4, ER-L4		Transmittal 01 45 00.3.10.1. & Appen. C, Submittals 01 45 00.3.10.1. & Appen. C, D Submittal Register	As a minimum, geotextiles shall be randomly sampled for testing in accordance with ASTM D4354, Procedure A. Acceptance of geotextile shall be in accordance with ASTM D4759. Tests not meeting the specified requirements will result in the rejection of applicable rolls.
1.12	Quality Assurance Samples	31 05 19, 3.1.1	CQC-L4, SDQC-L4, D-L4, ER-L4, MCT-L4	D-L4, ER-L4		Daily Quality Control Report/ Daily Activity Log (DQCR) 01 45 00.3.10.1 & Appen. C	Provide assistance (access or physical samples) to the District in the collection of quality assurance samples for quality assurance testing; assign 7 days in the schedule to allow for testing.
1.13	ACB - DELIVERY, STORAGE, AND HANDLING	35 31 19.20, 1.6	CQC-L1, SDQC-L1, D-L1, ER-L1, MCT-L1	D-L1, ER-L1		Daily Quality Control Report/ Daily Activity Log (DQCR) 01 45 00.3.10.1 & Appen. C	Check products upon delivery to assure that the proper material has been received and is undamaged. For geosynthetics, the guidelines presented in ASTM D4873/D4873M shall be followed.
1.14	ACB - DELIVERY, STORAGE, AND HANDLING	35 31 19.20, 1.6.1	CQC-L1, SDQC-L1, D-L1, ER-L1, MCT-L1	D-L1, ER-L1		Daily Quality Control Report/ Daily Activity Log (DQCR) 01 45 00.3.10.1 & Appen. C	Provide blocks which are sound and free of defects that would interfere with proper placement or that would impair the strength or longevity of the installation.
1.15	ACB - DELIVERY, STORAGE, AND HANDLING	35 31 19.20, 1.6.1	CQC-L1, SDQC-L1, D-L1, ER-L1, MCT-L1	D-L1, ER-L1		Daily Quality Control Report/ Daily Activity Log (DQCR) 01 45 00.3.10.1 & Appen. C	Discard blocks with the following defects: a. Broken appendages. b. Chips larger than 2 inches in any dimension. c. Cracks wider than 0.02 inches and longer than 33 percent of the nominal height.
1.16	ACB - DELIVERY, STORAGE, AND HANDLING	35 31 19.20, 1.6.1	CQC-L1, SDQC-L1, D-L1, ER-L1, MCT-L1	D-L1, ER-L1		Daily Quality Control Report/ Daily Activity Log (DQCR) 01 45 00.3.10.1 & Appen. C	Minor cracks, incidental to the usual method of manufacture, or chipping that results from customary methods of handling in shipping, delivery and placement will not be deemed grounds for rejection.
1.17	ACB - DELIVERY, STORAGE, AND HANDLING	35 31 19.20, 1.6.1	CQC-L1, SDQC-L1, D-L1, ER-L1, MCT-L1	D-L1, ER-L1		Daily Quality Control Report/ Daily Activity Log (DQCR) 01 45 00.3.10.1 & Appen. C	Store blocks in a suitable location away from mud, paint, wet cement, and other contamination or disturbance. Submit block installation shop drawings.
2	**CONSTRUCTION**						
2.1	Initial Control Phase Inspection	01 45 00	CQC-L5, SDQC-L5, D-L5, ER-L5, MCT-L5	D-L4, ER-L4	provide agenda > 48 Hours prior to meeting	Initial Control Phase Inspection Agenda 01 45 00.1.10.1.13, Initial Control Phase Inspection Checklist	An Initial Control Phase Inspection shall be performed shortly after the DFOW has begun to determine if the DFOW plan is working and if the workmanship of the workers is satisfactory and meets safety standards.
2.2	Daily Follow-up Control Phase Inspections	01 45 00	CQC-L1			Daily Quality Control Report/ Daily Activity Log (DQCR) 01 45 00.3.10.1 & Appen. C	Contractor to perform daily Follow-up Control Phase Inspections and document findings on DQCR.

2.3	Subgrade Preparation	31 05 19, 3.2.1	CQC-L1, SDQC-L1, D-L1, ER-L1, MCT-L1	D-L1, ER-L1		Daily Quality Control Report/ Daily Activity Log (DQCR) 01 45 00.3.10.1 & Appen. C	The surface underlying the geotextile shall be smooth and free of ruts or protrusions which could damage the geotextile. Subgrade materials and compaction requirements shall be in accordance with Section 31 00 00.
2.4	Geotextile Layout Plan	31 05 19, 3.2.1	CQC-L1, SDQC-L1, D-L1, ER-L1, MCT-L1	D-L1, ER-L1		Daily Quality Control Report/ Daily Activity Log (DQCR) 01 45 00.3.10.1 & Appen. C	The Contractor will provide a geotextile layout plan detailing proposed size, number, position, and sequence of geotextile rolls and direction of all field seams subject to District approval before commencement of Geotextile installation.
2.5	ACB - compressive strength	35 31 19.20, 3.8	CQC-L4, SDQC-L4, D-L4, ER-L4, MCT-L4	D-L4, ER-L4		Transmittal 01 45 00.3.10.1. & Appen. C, Submittals 01 45 00.3.10.1. & Appen. C, D Submittal Register	The ACB blocks shall be sampled and tested for compressive strength, water absorption and unit weight. The sample frequency shall be 3 specimens for each 3000 SY.
2.6	ACB - water absorption	35 31 19.20, 3.8	CQC-L4, SDQC-L4, D-L4, ER-L4, MCT-L4	D-L4, ER-L4		Transmittal 01 45 00.3.10.1. & Appen. C, Submittals 01 45 00.3.10.1. & Appen. C, D Submittal Register	The ACB blocks shall be sampled and tested for compressive strength, water absorption and unit weight. The sample frequency shall be 3 specimens for each 3000 SY.
2.7	ACB - unit weight	35 31 19.20, 3.8	CQC-L4, SDQC-L4, D-L4, ER-L4, MCT-L4	D-L4, ER-L4		Transmittal 01 45 00.3.10.1. & Appen. C, Submittals 01 45 00.3.10.1. & Appen. C, D Submittal Register	The ACB blocks shall be sampled and tested for compressive strength, water absorption and unit weight. The sample frequency shall be 3 specimens for each 3000 SY.
2.8	Correction of Joint Spacing	35 31 19.20, 3.4.2.2	CQC-L1, SDQC-L1, D-L1, ER-L1, MCT-L1	D-L1, ER-L1		Daily Quality Control Report/ Daily Activity Log (DQCR) 01 45 00.3.10.1 & Appen. C	If the block pattern becomes skewed to an extent that blocks bind, joints close, or blocks stickup, then the placed ACB that is determined to be out of tolerance shall be removed and replaced. Where the nonconformance of the joint spacing is due to project features, such as warped slopes or anchor trenches, then cast-in-place concrete joints shall be field located in concurrence with the District.
2.9	Block Layout Pattern Dependent on Project Features	35 31 19.20, 3.4.2.3	CQC-L1, SDQC-L1, D-L1, ER-L1, MCT-L1	D-L1, ER-L1		Daily Quality Control Report/ Daily Activity Log (DQCR) 01 45 00.3.10.1 & Appen. C	If the block pattern becomes skewed to an extent that the joint free play is not acceptable to the District, then cast-in-place concrete joints shall be field located as directed by the District.
2.10	Block Layout Pattern Dependent on Project Features	35 31 19.20, 3.4.2.4	CQC-L1, SDQC-L1, D-L1, ER-L1, MCT-L1	D-L1, ER-L1		Daily Quality Control Report/ Daily Activity Log (DQCR) 01 45 00.3.10.1 & Appen. C	If the block pattern is shown to be maintained parallel and perpendicular to selected project features, such as the crest/toe of levee/channel slopes, then field location of cast-in-place concrete joints shall be implemented as needed, and as directed by the District.
2.11	Tolerances	35 31 19.20, 3.4.3	CQC-L1, SDQC-L1, D-L1, ER-L1, MCT-L1	D-L1, ER-L1		Daily Quality Control Report/ Daily Activity Log (DQCR) 01 45 00.3.10.1 & Appen. C	Maximum acceptable block projections (vertical offset from adjacent blocks) for "installation in the dry" shall not exceed 0.5 inches for interlocking blocks 1.0 inch for cabled systems. Typical block projections shall be less than half the maximum projections.
2.12	CONCRETE JOINTS - General Requirements	35 31 19.20, 3.5.1	CQC-L1, SDQC-L1, D-L1, ER-L1, MCT-L1	D-L1, ER-L1		Daily Quality Control Report/ Daily Activity Log (DQCR) 01 45 00.3.10.1 & Appen. C	Use of cast in place concrete joints shall be minimized to the extent practicable. The District shall be informed of all concrete joints not shown on shop drawings prior to field placement.
2.13	CONCRETE JOINTS - General Requirements	35 31 19.20, 3.5.1	CQC-L1, SDQC-L1, D-L1, ER-L1, MCT-L1	D-L1, ER-L1		Daily Quality Control Report/ Daily Activity Log (DQCR) 01 45 00.3.10.1 & Appen. C	Joints that shall require concrete include: a. Joints where block interlock is discontinuous. b. Abutments where the ACB meets headwalls, pipe penetrations, or sidewalks. c. Any areas where there are partial blocks (to avoid small blocks with reduced hydraulic stability).
2.14	Anchoring ACB Revetment	35 31 19.20, 3.5.2	CQC-L1, SDQC-L1, D-L1, ER-L1, MCT-L1	D-L1, ER-L1		Daily Quality Control Report/ Daily Activity Log (DQCR) 01 45 00.3.10.1 & Appen. C	Excavate trenches as indicated to accept the revetment edges. Secure and anchor the revetment edges using 3,000 psi concrete. Backfill the concrete trench no sooner than 3 days after the concrete has been placed.
3	**ACCEPTANCE**						
3.1	Final Follow-up Control Phase Inspection	01 45 00	CQC-L5, D-L5, ER-L5,	D-L5, ER-L5	provide agenda > 48 Hours prior to meeting	Final Follow-up Control Phase Inspection Checklist & Punch-Out	Final Follow-up Control Phase Inspection checklist & punch out items have been completed.

(1): A HOLD POINT is a mandatory requirement - advance notification and acceptance (verbal/written) is required prior to continuing work.
(2): A NOTIFY POINT requires advance notification prior to performing the activity.
(3): The DISTRICT/PQACT inspection form / checklist is to be completed by the Contractor and member of the District/PQACT prior to the start of work. The inspection form/ checklist shall show no incompletions.

LEVEL 1 = CONTINUOUS INSPECTION OF ACTIVITIES, LEVEL 2 = MONITOR CRITICAL ACTIVITIES AND WITNESS TESTING, LEVEL 3 = RANDOM INSPECTION AND/OR AT COMPLETION OF WORK, LEVEL 4 = REVIEW OF PRECONSTRUCTION DOCUMENTATION, LEVEL 5 - REVIEW OF FINAL DOCUMENTS

CQC = CONTRACTOR QUALITY CONTROL SDQC = SPECIALIZED DISCIPLINE D = DISTRICT/PQACT ER = ENGINEER OF RECORD MCT = MANUFACTURER CERTIFICATION/TESTING

Approved By District/PQACT QA Manager: *D Roy Moseley* ***Date:*** *28July2018*

INSPECTION / TEST PLAN (ITP)
C-43 WEST BASIN STORAGE RESERVOIR
CONTRACT NUMBER: CN XXXXXXXXXX

CIVIL WORKS

Location: Hendry County, FL

Date Prepared:

Revision:

Contractor: **Prepared By:**

RECREATION FEATURES
Spec. Section: 07 61 13, 10 14 00.10, 10 18 00, 03 31 01.00 10, 10 21 12

Item No.	Attribute / Activity Description	Acceptance Criteria (Codes, Std., Spec., Drawings, Etc.)	INSPECTION REQUIREMENTS			Forms / Records / References (3)	Comments
			Inspect	Hold (1)	Notify (2)		
1	PRE-CONSTRUCTION						
1.1	Preparatory Control Phase Inspection	01 45 00	CQC-L4, SQDC-L4, D-L4, ER-L4	D-L4, ER-L4	provide agenda > 48 hours prior to meeting	Preparatory Control Phase Inspection Worksheet 01 45 00.3.10.1 & Attachment C	Preparatory Control Phase Inspection/Meeting has been performed successfully without open issues.
1.2	Site Plan	33 03 00, 3.1	CQC-L4, SQDC-L4, D-L4, ER-L4			Transmittal 01 45 00.3.10.1. & Appen. C, Submittals 01 45 00.3.10.1. & Appen. C, D Submittal Register	Prior to the start of the work submit a site plan indicating the proposed locations of the turbidity barriers.
1.3	STANDING SEAM SHEET METAL ROOFING - All Pre-Construction Submittals	07 61 13	CQC-L4, SQDC-L4, D-L4, ER-L4			Transmittal 01 45 00.3.10.1. & Appen. C, Submittals 01 45 00.3.10.1. & Appen. C, D Submittal Register	All Pre-Construction submittals for this DFOW shall be submitted by the Contractor and approved by the District/PQACT prior to the commencement of the Work
1.4	DELIVERY, STORAGE, AND HANDLING	07 61 13 - 1.7	CQC-L1, SQDC-L1, D-L1, ER-L1			Preparatory Control Phase Inspection Worksheet 01 45 00.3.10.1 & Attachment C	Deliver materials to site in an undamaged condition. Store materials off the ground to provide protection against oxidation caused by ground contact.
1.5	DELIVERY, STORAGE, AND HANDLING	07 61 13 - 1.7	CQC-L1, SQDC-L1, D-L1, ER-L1			Preparatory Control Phase Inspection Worksheet 01 45 00.3.10.1 & Attachment C	Store materials protected from exposure to harmful weather conditions and at temperature conditions recommended by manufacturer. Stack prefinished material to prevent twisting, bending, abrasion, scratching and denting. Provide factory installed strippable vinyl film protective coating to panels.
1.6	DELIVERY, STORAGE, AND HANDLING	07 61 13 - 1.7	CQC-L1, SQDC-L1, D-L1, ER-L1			Preparatory Control Phase Inspection Worksheet 01 45 00.3.10.1 & Attachment C	Deliver materials in manufacturer's original packaging with identification labels intact.
1.7	WARRANTY	07 61 13 - 1.8	CQC-L4, SQDC-L4, D-L4, ER-L4			Transmittal 01 45 00.3.10.1. & Appen. C, Submittals 01 45 00.3.10.1. & Appen. C, D Submittal Register	The warranty shall meet the requirements specified in SECTION 01 61 03 EQUIPMENT AND MATERIALS.
1.8	EXTERIOR SIGNAGE - All Pre-Construction Submittals	10 14 00 10 -	CQC-L4, SQDC-L4, D-L4, ER-L4			Transmittal 01 45 00.3.10.1. & Appen. C, Submittals 01 45 00.3.10.1. & Appen. C, D Submittal Register	All Pre-Construction submittals for this DFOW shall be submitted by the Contractor and approved by the District/PQACT prior to the commencement of the Work
1.9	QUALIFICATIONS	10 14 00 10 - 1.5	CQC-L4, SQDC-L4, D-L4, ER-L4			Transmittal 01 45 00.3.10.1. & Appen. C, Submittals 01 45 00.3.10.1. & Appen. C, D Submittal Register	Dimensional letters, numbers and symbols must be the standard product of a manufacturer regularly engaged in the manufacture of the products. Items of equipment must essentially duplicate equipment that has been in satisfactory use at least 2 years prior to bid opening.
1.10	DELIVERY AND STORAGE	10 14 00 10 - 1.7	CQC-L1, SQDC-L1, D-L1, ER-L1			Preparatory Control Phase Inspection Worksheet 01 45 00.3.10.1 & Attachment C	If the monument sign is constructed on site the sign letters, numbers and symbols must be wrapped for shipment and storage, delivered to the jobsite in manufacturer's original packaging, and stored in a clean, dry area with the manufacturer's instructions until they are needed in the sign assembly and construction.
1.11	INFORMATION KIOSK - All Pre-Construction Submittals	10 18 00	CQC-L4, SQDC-L4, D-L4, ER-L4			Transmittal 01 45 00.3.10.1. & Appen. C, Submittals 01 45 00.3.10.1. & Appen. C, D Submittal Register	All Pre-Construction submittals for this DFOW shall be submitted by the Contractor and approved by the District/PQACT prior to the commencement of the Work

1.12	DELIVERY AND STORAGE	10 18 00 - 1.6	CQC-L1, SQDC-L1, D-L1, ER-L1			Preparatory Control Phase Inspection Worksheet 01 45 00.3.10.1 & Attachment C	Deliver materials to site in undamaged condition. Store materials off the ground. Cover materials to prevent damage from rain.
1.13	DELIVERY AND STORAGE	10 18 00 - 1.6	CQC-L1, SQDC-L1, D-L1, ER-L1			Preparatory Control Phase Inspection Worksheet 01 45 00.3.10.1 & Attachment C	Refer to manufacture's instruction for Product Storage and Handling Requirements. Follow manufacturer's instructions.
1.14	DELIVERY AND STORAGE	10 18 00 - 1.6	CQC-L1, SQDC-L1, D-L1, ER-L1			Preparatory Control Phase Inspection Worksheet 01 45 00.3.10.1 & Attachment C	Manufacturer shall maintain a program to permit return of scrap materials.
1.15	WARRANTY	10 18 00 - 1.7	CQC-L4, SQDC-L4, D-L4, ER-L4			Transmittal 01 45 00.3.10.1. & Appen. C, Submittals 01 45 00.3.10.1. & Appen. C, D Submittal Register	All Pre-Construction submittals for this DFOW shall be submitted by the Contractor and approved by the District/PQACT prior to the commencement of the Work
1.16	PRECAST RESTROOM TOILET - All Pre-Construction Submittals	10 18 00	CQC-L4, SQDC-L4, D-L4, ER-L4			Transmittal 01 45 00.3.10.1. & Appen. C, Submittals 01 45 00.3.10.1. & Appen. C, D Submittal Register	All Pre-Construction submittals for this DFOW shall be submitted by the Contractor and approved by the District/PQACT prior to the commencement of the Work
1.17	DELIVERY, STORAGE, AND HANDLING	10 18 00 - 1.5	CQC-L1, SQDC-L1, D-L1, ER-L1			Preparatory Control Phase Inspection Worksheet 01 45 00.3.10.1 & Attachment C	Deliver the precast toilet building to the site in an undamaged condition. Manufacturer is responsible for delivery, unloading and final placement of the precast toilet building.
1.18	CAST-IN-PLACE STRUCTURAL CONCRETE FOR CIVIL WORKS - All Pre-Construction Submittals	03 31 01.00 10 -	CQC-L4, SQDC-L4, D-L4, ER-L4			Transmittal 01 45 00.3.10.1. & Appen. C, Submittals 01 45 00.3.10.1. & Appen. C, D Submittal Register	All Pre-Construction submittals for this DFOW shall be submitted by the Contractor and approved by the District/PQACT prior to the commencement of the Work
2	**CONSTRUCTION**						
2.1	Initial Control Phase Inspection	01 45 00, 3.7.2	CQC-L5, SDQC-L5, D-L5, ER-L5,	D-L5, ER-L5	provide agenda > 48 hours prior to meeting	Initial Control Phase Inspection Checklist 01 45 00.3.10.1, & Specifications Appendix C	An Initial Control Phase Inspection shall be performed shortly after the DFOW has begun to determine if the DFOW plan is working and if the workmanship of the workers is satisfactory and meets safety standards.
2.2	Daily Follow-up Control Phase Inspections	01 45 00, 3.7.3	CQC-L1	N/A	N/A	Daily Quality Control Report/ Daily Activity Log (DQCR) 01 45 00.3.10.1 & Specifications Appendix C	Contractor to perform daily Follow-up Control Phase Inspections and document findings on DQCR.
2.3	STANDING SEAM SHEET METAL ROOFING - INSPECTION	07 61 13 - 3.1	CQC-L1, SQDC-L1, D-L1, ER-L1	D-L1, ER-L1		Preparatory Control Phase Inspection Worksheet 01 45 00.3.10.1 & Attachment C	Examine surfaces to receive metal panels and notify District in writing of any defects.
2.4	INSPECTION	07 61 13 - 3.1	CQC-L1, SQDC-L1, D-L1, ER-L1	D-L1, ER-L1		Preparatory Control Phase Inspection Worksheet 01 45 00.3.10.1 & Attachment C	Starting of Work by Contractor shall constitute acceptance of Work of others as satisfactory.
2.5	INSTALLATION	07 61 13 - 3.1	CQC-L1, SQDC-L1, D-L1, ER-L1	D-L1, ER-L1		Preparatory Control Phase Inspection Worksheet 01 45 00.3.10.1 & Attachment C	Erect panels to a tolerance not exceeding 1/4 inch per 20 feet.
2.6	CLEAN UP	07 61 13 - 3.4	CQC-L1, SQDC-L1, D-L1, ER-L1	D-L1, ER-L1		Preparatory Control Phase Inspection Worksheet 01 45 00.3.10.1 & Attachment C	Work that is damaged or defective shall be replaced at no additional cost to the District.
2.7	INSTALLATION	10 14 00 10 - 3.2	CQC-L1, SQDC-L1, D-L1, ER-L1	D-L1, ER-L1		Preparatory Control Phase Inspection Worksheet 01 45 00.3.10.1 & Attachment C	Signs, plaques, or dimensional letters must be installed in accordance with approved manufacturer's instructions at the location shown on the approved detail drawings. The sign must be installed plumb and true and by method shown or specified.
2.8	Protection and Cleaning	10 14 00 10 - 3.2.1	CQC-L1, SQDC-L1, D-L1, ER-L1	D-L1, ER-L1		Preparatory Control Phase Inspection Worksheet 01 45 00.3.10.1 & Attachment C	The work must be protected against damage during construction. Until the sign is completed, inspected and accepted, cover the sign so as not to mislead the public. Covering must be maintained until instructed to be removed by the District or until the facility is to be opened for business.
2.9	FIELD PAINTED FINISH	10 14 00 10 - 3.3	CQC-L1, SQDC-L1, D-L1, ER-L1	D-L1, ER-L1		Preparatory Control Phase Inspection Worksheet 01 45 00.3.10.1 & Attachment C	Miscellaneous metals and frames must be field painted in accordance with Section 09 06 90 PROTECTIVE COATINGS. Anodized metals, masonry, and glass must be protected from paint. Finish must be free of scratches or other blemishes.
2.10	Testing	10 21 12 - 3.2.4	CQC-L1, SQDC-L1, D-L1, ER-L1	D-L1, ER-L1		Preparatory Control Phase Inspection Worksheet 01 45 00.3.10.1 & Attachment C	Sampling shall be in accordance with ASTM C172/C172M.
2.11	Testing	10 21 12 - 3.2.4	CQC-L1, SQDC-L1, D-L1, ER-L1	D-L1, ER-L1		Preparatory Control Phase Inspection Worksheet 01 45 00.3.10.1 & Attachment C	All testing shall be performed in PCI MNL-116 certified laboratories. Submit manufacturer's certification that the testing will be performed by a PCI certified laboratory.

2.12	Testing - Air content	10 21 12 - 3.2.4	CQC-L1, SQDC-L1, D-L1, ER-L1	D-L1, ER-L1		Preparatory Control Phase Inspection Worksheet 01 45 00.3.10.1 & Attachment C	The first batch of concrete shall be in the range of 5.0% +/- 1.5% per ASTM C231/C231M.
2.13	Testing - Compressive strength of the cylinders	10 21 12 - 3.2.4	CQC-L1, SQDC-L1, D-L1, ER-L1	D-L1, ER-L1		Preparatory Control Phase Inspection Worksheet 01 45 00.3.10.1 & Attachment C	Test two (2) cylinders at release (minimum strength of 2500 psi). - tested to ASTM C39/C39M.
2.14	Testing - Compressive strength of the cylinders	10 21 12 - 3.2.4	CQC-L1, SQDC-L1, D-L1, ER-L1	D-L1, ER-L1		Preparatory Control Phase Inspection Worksheet 01 45 00.3.10.1 & Attachment C	Test one (1) cylinder at seven (7) days (minimum strength of 4500 psi). - tested to ASTM C39/C39M.
2.15	Testing - Compressive strength of the cylinders	10 21 12 - 3.2.4	CQC-L1, SQDC-L1, D-L1, ER-L1	D-L1, ER-L1		Preparatory Control Phase Inspection Worksheet 01 45 00.3.10.1 & Attachment C	Test two (2) cylinders at 28 days (minimum strength of 5000 psi).- tested to ASTM C39/C39M.
2.16	Backfill and Compaction	10 21 12 - 3.2.5	CQC-L1, SQDC-L1, D-L1, ER-L1	D-L1, ER-L1		Preparatory Control Phase Inspection Worksheet 01 45 00.3.10.1 & Attachment C	Compact the natural ground at the bottom of the vault excavation to 95% of ASTM D698 maximum density.
2.17	Backfill and Compaction	10 21 12 - 3.2.5	CQC-L1, SQDC-L1, D-L1, ER-L1	D-L1, ER-L1		Preparatory Control Phase Inspection Worksheet 01 45 00.3.10.1 & Attachment C	Compact leveling course with one (1) pass using a walk behind vibratory compactor.
2.18	Backfill and Compaction	10 21 12 - 3.2.5	CQC-L1, SQDC-L1, D-L1, ER-L1	D-L1, ER-L1		Preparatory Control Phase Inspection Worksheet 01 45 00.3.10.1 & Attachment C	Set vault in place and check for level. Backfill around structure. Use excavated material for backfill except those rocks larger than 6 inch in maximum dimension shall not be placed within 6 inches of the exterior vault walls.
2.19	Finish Grading	10 21 12 - 3.2.5	CQC-L1, SQDC-L1, D-L1, ER-L1	D-L1, ER-L1		Preparatory Control Phase Inspection Worksheet 01 45 00.3.10.1 & Attachment C	Spread excess excavated material from the vault around structure. Intended final grade shall be 4 inches below the bathroom floor slab.
2.20	Finish Grading	10 21 12 - 3.2.5	CQC-L1, SQDC-L1, D-L1, ER-L1	D-L1, ER-L1		Preparatory Control Phase Inspection Worksheet 01 45 00.3.10.1 & Attachment C	Hand rake areas disturbed by excavation, backfilling and stockpiling of excavated materials. Remove all exposed rocks over 1 inch in size.
2.21	Preparation for Placing (Concrete on Earth Foundation)	31 00 00	CQC -L1,D-L1, SDQC-L3,ER-L3	D-L3, ER-L3	Provide 24 hrs. notice for inspection	31 00 00, 3.14	Inspection Before Placement
2.22	Vapor Retarder / Barrier	03 31 01.00 10	CQC -L1,D-L1, ER-L3	D-L3, ER-L3	Provide 24 hrs. notice for inspection		
2.23	Forming Systems (Formwork, Form Ties, other)	03 31 01.00 10	CQC -L1,D-L1, ER-L3	D-L3, ER-L3	Provide 24 hrs. notice for inspection	03 11 13.00 10, 2.2 & 2.3	
2.24	Concrete Accessories (Contraction Joint Strips, Expansion Joint Filler, Chamfer Strips, other)	03 31 01.00 10	CQC -L1,D-L1, ER-L3	D-L3, ER-L4	Provide 24 hrs. notice for inspection	03 5 00.00 10, 2.1 & 2.2	
2.25	Sealant (Polychloroprene Elastomeric, Field Molded, other)	03 31 01.00 10	CQC -L1,D-L1, ER-L3	D-L3, ER-L4	Provide 24 hrs. notice for inspection	03 5 00.00 10, 2.3	
2.26	Waterstop (Non-Metallic, PVC & Field Joints)	03 31 01.00 10	CQC -L1,D-L1, ER-L3	D-L3, ER-L4	Provide 24 hrs. notice for inspection	03 15 00.00 10, 2.4	
2.27	Construction Joint Treatment	03 31 01.00 10	CQC -L1,D-L1, ER-L4	D-L3, ER-L5	Provide 24 hrs. notice for inspection	03 31 01.00 10, 3.1.4	
2.28	Concrete Reinforcing	03 31 01.00 10	CQC -L1,D-L1, ER-L3	D-L3, ER-L4	Provide 24 hrs. notice for inspection	03 20 00.00 10, 2.1 thru 2.6	
2.29	Embedded Items (Metals, Sleeves, Thimbles, Base Plates, Bearing Plates, Conduits & Other)	03 31 01.00 10	CQC -L1,D-L1, ER-L4	D-L3, ER-L5	Provide 24 hrs. notice for inspection	03 20 00.00 10, 3.1 & 3.4	
2.30	Concrete Finishing (Float Finish, Trowel Finish, Non-Slip Finish, Dry Shake Finish,	03 31 01.00 10	CQC -L1,D-L1, ER-L5	D-L3, ER-L6		03 35 00.00 10,3.1	Inspection During Placement
2.31	Concrete Curing (Curing Materials: Evaporation Retardant, Sheet Membrane, Sprayed Curing Compound)	03 31 01.00 10	CQC -L1,D-L1, ER-L3	D-L3, ER-L7		03 39 00.00 10,2.1	
2.32	Concrete Curing (Curing Water)	03 31 01.00 10	CQC -L1,D-L1, ER-L3	D-L3, ER-L7		03 39 00.00 10,2.2	

3	ACCEPTANCE						
3.1	Final Follow-up Control Phase Inspection	01 45 00, 3.9.3	CQC-L5, D-L5, ER-L5,	D-L5, ER-L5	provide agenda > 48 hours prior to meeting	Final Follow-up Control Phase Inspection Checklist & Punch-Out 01 45 00.3.10.1 & Specifications Appendix C	Final Follow-up Control Phase Inspection checklist & punch out items have been completed.
3.2	MAINTENANCE INSTRUCTIONS	10 14 00 10 - 3.2.1	CQC-L5, SDQC-L5, D-L5, ER-L5,	D-L5, ER-L5		Transmittal 01 45 00.3.10.1. & Appen. C, Submittals 01 45 00.3.10.1. & Appen. C, D Submittal Register	Submit 2 copies of maintenance instructions listing routine maintenance procedures, possible breakdowns and repairs, and troubleshooting guides. The instructions must include simplified diagrams for the equipment as installed. Signs must be cleaned, as required, at time of cover removal. Submit instructions for protection and cleaning.
3.3	WARRANTY	10 21 12.1.6	CQC-L5, SDQC-L5, D-L5, ER-L5,	D-L5, ER-L5		Transmittal 01 45 00.3.10.1. & Appen. C, Submittals 01 45 00.3.10.1. & Appen. C, D Submittal Register	The warranty shall meet the requirements specified in Section 01 61 03 EQUIPMENT AND MATERIALS.
3.4	Operation and Maintenance Manuals	10 21 12 - 3.2.6.1	CQC-L5, SDQC-L5, D-L5, ER-L5,	D-L5, ER-L5		Transmittal 01 45 00.3.10.1. & Appen. C, Submittals 01 45 00.3.10.1. & Appen. C, D Submittal Register	Submit operation manual outlining step-by-step procedures required for system operation.
3.5	Training Course	10 21 12 - 3.2.6.2	CQC-L5, SDQC-L5, D-L5, ER-L5,	D-L5, ER-L5		Transmittal 01 45 00.3.10.1. & Appen. C, Submittals 01 45 00.3.10.1. & Appen. C, D Submittal Register	Conduct a training course for the operating staff as designated by the District.
3.6	Complete as-built surveys and prepare Record drawings	GT 6.12	CQC -L1,D-L1, ER-L3	D-L3, ER-L7		General Term & Conditions	As-built surveys of the constructed pump station, underground utilities, and microwave tower.
3.7	Deficiencies & Non-Conformances of this DFOW	01 45 00	CQC-L5, SDQC-L5, D-L5, ER-L5			Deficiency Logs and NCN Logs 01 45 00.3.10.1 & Append. C	All deficiencies and non-conformances have been corrected of work in order to avoid covering deficiencies.

(1): A HOLD POINT is a mandatory requirement - advance notification and acceptance (verbal/written) is required prior to continuing work.

(2): A NOTIFY POINT requires advance notification prior to performing the activity.

(3): The DISTRICT/PQACT inspection form / checklist is to be completed by the Contractor and member of the District/PQACT prior to the start of work. The inspection form/ checklist shall show no incompletions.

LEVEL 1 = CONTINUOUS INSPECTION OF ACTIVITIES, LEVEL 2 = MONITOR CRITICAL ACTIVITIES AND WITNESS TESTING, LEVEL 3 = RANDOM INSPECTION AND/OR AT COMPLETION OF WORK, LEVEL 4 = REVIEW OF PRECONSTRUCTION DOCUMENTATION, LEVEL 5 - REVIEW OF FINAL DOCUMENTS

CQC = CONTRACTOR QUALITY CONTROL SDQC = SPECIALIZED DISCIPLINE D = DISTRICT/PQACT ER = ENGINEER OF RECORD MCT = MANUFACTURER CERTIFICATION/TESTING

Approved By District/PQACT QA Manager: *DRoy Moseley* ***Date:*** *29July2018*

INSPECTION / TEST PLAN (ITP)
C-43 WEST BASIN STORAGE RESERVOIR
CONTRACT NUMBER: CN XXXXXXXXXX
CIVIL WORKS

Location: Hendry County, FL
Date Prepared:
Revision:
Contractor: **Prepared By:**

DAM FOUNDATION PREPARATION
Spec. Section: 31 23 13

Item No.	Attribute / Activity Description	Acceptance Criteria (Codes, Std., Spec., Drawings, Etc.)	INSPECTION REQUIREMENTS			Forms / Records / References (3)	Comments
			Inspect	Hold (1)	Notify (2)		
1	PRE-CONSTRUCTION						
1.1	Contractor's Quality Control Plan, Site Health & Safety Plan and Permits	Quality Control 01 45 00, Safety Requirements 01 35 26, Permits & Fees 00 31 46	D-L4	D-L4		Plans and Permits	Plans have been submitted by Contractor and approved by the District/PQACT. All pemits have been obtained to begin work.
1.2	Preconstruction Submittals	Submittals 01 33 00 31 23 13	D-L4, ER-L4	D-L4, ER-L4		Transmittal 01 45 00.3.10.1. & Appen. C, Submittals 01 45 00.3.10.1. & Appen. C, Submittal Register	All preconstruction submittals for this DFOW shall be submitted by the Contractor and Approved by the District/PQACT.
1.3	Request For Information (RFIs)	Quality Control 01 45 00	D-L4, ER-L4	D-L4, ER-L4		Request for Information & Log 01 45 00.3.10.1 & Appen. C	All RFIs for this DFOW shall be answered in order to clear up any questions before work begins.
1.4	Work Plans	Quality Control 01 45 00	D-L4, ER-L4	D-L4, ER-L4		Plans	All work plans for this DFOW shall be submitted by the Contractor and approved by the District/PQACT.
1.5	Activity Hazard Analysis (AHA)	Safety Requirements 01 35 26	D-L4, ER-L4	D-L4, ER-L4		AHA 01 45 00.3.10.1 & Appen. C	The AHA for this DFOW have been submitted by the Contractor.
1.6	Previous Work Deficiencies & Non-Conformances of previous DFOW	Quality Control 01 45 00	CQC-L5, SDQC-L5, D-L5, ER-L5, MCT-L5	D-L4, ER-L4		Deficiency Logs and NCN Logs 01 45 00.3.10.1 & Appen. C	All deficiencies and non-conformances shall be corrected of previous work in order to avoid covering deficiencies.
1.7	Final Follow-up Control Phase Inspection of previous DFOW	Quality Control 01 45 00	CQC-L5, SDQC-L5, D-L5, ER-L5, MCT-L5	D-L4, ER-L4	48 Hours	Final Follow-up Control Phase Inspection Checklist & Punch-Out	Final Follow-up Control Phase Inspection checklist & punch out items shall be completed of previous work.
1.8	Preparatory Control Phase Inspection	Quality Control 01 45 00	CQC-L5, SDQC-L5, D-L5, ER-L5, MCT-L5	D-L4, ER-L4	48 Hours	Preparatory Control Phase Inspection Worksheet 01 45 00.3.10.1 & Appen. C	Preparatory Control Phase Inspection/Meeing shall be performed successfully without open issues.
2	CONSTRUCTION						
2.1	Initial Control Phase Inspection	01 45 00, 3.7.2	CQC-L5, SDQC-L5, D-L5, ER-L5,	D-L5, ER-L5	provide agenda > 48 hours prior to meeting	Initial Control Phase Inspection Checklist 01 45 00.3.10.1, & Specifications Appendix C	An Initial Control Phase Inspection shall be performed shortly after the DFOW has begun to determine if the DFOW plan is working and if the workmanship of the workers is satisfactory and meets safety standards.
2.2	Daily Follow-up Control Phase Inspections	01 45 00, 3.7.3	CQC-L1	N/A	N/A	Daily Quality Control Report/ Daily Activity Log (DQCR) 01 45 00.3.10.1 & Specifications Appendix C	Contractor to perform daily Follow-up Control Phase Inspections and document findings on DQCR.
2.3	STRIPPING	31 23 13, 3.1	CQC-L1, SDQC-L1, D-L1, ER-L1,	D-L1, ER-L1	N/A	Daily Quality Control Report/ Daily Activity Log (DQCR) 01 45 00.3.10.1 & Specifications Appendix C	The Contractor shall remove topsoil and all sand with roots and other vegetative matter from the subgrade soils to the limits shown on the Drawings.
2.4	REMOVAL OF BURIED CONDUITS	31 23 13, 3.2	CQC-L1, SDQC-L1, D-L1, ER-L1,	D-L1, ER-L1	N/A	Daily Quality Control Report/ Daily Activity Log (DQCR) 01 45 00.3.10.1 & Specifications Appendix C	The Contractor shall perform pre-trenching along the lines shown on the Drawings for exploration of and removal of existing buried irrigation and drainage (and all other) conduits within the limits shown on the
2.5	EROSION CONTROL	31 23 13, 3.3	CQC-L1, SDQC-L1, D-L1, ER-L1,	D-L1, ER-L1	N/A	Daily Quality Control Report/ Daily Activity Log (DQCR) 01 45 00.3.10.1 & Specifications Appendix C	The Contractor shall prevent and control erosion and water pollution per Florida Department of Environmental Protection (FDEP) regulations and permit conditions.
2.6	EROSION CONTROL	31 23 13, 3.3	CQC-L1, SDQC-L1, D-L1, ER-L1,	D-L1, ER-L1	N/A	Daily Quality Control Report/ Daily Activity Log (DQCR) 01 45 00.3.10.1 & Specifications Appendix C	The Contractor shall prevent and control dust.
2.7	RECLAMATION OF CANALS AND 10TH ROW DITCHES	31 23 13, 3.4	CQC-L1, SDQC-L1, D-L1, ER-L1,	D-L1, ER-L1	N/A	Daily Quality Control Report/ Daily Activity Log (DQCR) 01 45 00.3.10.1 & Specifications Appendix C	The Contractor shall excavate to remove all vegetation, roots, and soft sediments from the existing canals and 10th Row Ditches associated with the former citrus grove in the manner shown on the Drawings.

2.8	RECLAMATION OF CANALS AND 10TH ROW DITCHES	31 23 13, 3.4	CQC-L1, SDQC-L1, D-L1, ER-L1,	D-L1, ER-L1	N/A	Daily Quality Control Report/ Daily Activity Log (DQCR) 01 45 00.3.10.1 & Specifications Appendix C	The Contractor shall notify the District that the excavations are ready for inspection.
2.9	RECLAMATION OF CANALS AND 10TH ROW DITCHES	31 23 13, 3.4	CQC-L1, SDQC-L1, D-L1, ER-L1,	D-L1, ER-L1	N/A	Daily Quality Control Report/ Daily Activity Log (DQCR) 01 45 00.3.10.1 & Specifications Appendix C	The Contractor shall backfill the inspected and approved excavations with Embankment Fill as described in Specification 31 00 00.
2.10	PROOF OF CONCEPT	31 23 13, 3.5	CQC-L1, SDQC-L1, D-L1, ER-L1,	D-L1, ER-L1	N/A	Daily Quality Control Report/ Daily Activity Log (DQCR) 01 45 00.3.10.1 & Specifications Appendix C	The limits of the work completed for Proof of Concept shall be at least 1,500 feet long, and be split into 500-foot long segments along the baseline of the dam.
2.11	PREPARED FOUNDATION SOIL SEGMENT	31 23 13, 3.6	CQC-L1, SDQC-L1, D-L1, ER-L1,	D-L1, ER-L1	N/A	Daily Quality Control Report/ Daily Activity Log (DQCR) 01 45 00.3.10.1 & Specifications Appendix C	Only whole segments shall be considered by the District as complete. Each segment shall be field marked by the Contractor with stakes located 50 feet on center. The stakes shall be referenced to the project baseline of
2.12	PREPARED FOUNDATION GRADE STATUS REPORT	31 23 13, 3.8	CQC-L1, SDQC-L1, D-L1, ER-L1,	D-L1, ER-L1	N/A	Daily Quality Control Report/ Daily Activity Log (DQCR) 01 45 00.3.10.1 & Specifications Appendix C	A written report to be submitted by the Contractor on a weekly basis, that summarizes the areas where embankment foundation grades were prepared during the previous week, using project Station-Offset or other
2.13	TEMPORARY GEOTECHNICAL INSTRUMENTATION	31 23 13, 3.9	CQC-L1, SDQC-L1, D-L1, ER-L1,	D-L1, ER-L1	N/A	Daily Quality Control Report/ Daily Activity Log (DQCR) 01 45 00.3.10.1 & Specifications Appendix C	Coordinate installation of Temporary Geotechnical Instrumentation as described in Section 31 09 00 prior to filling embankment.
3	**ACCEPTANCE**						
3.1	Deficiencies & Non-Conformances of this DFOW	Quality Control 01 45 00	CQC-5, SDQC-5, D-5, ER-5, MCT-5	D-L5, ER-L4		Deficiency Logs and NCN Logs 01 45 00.3.10.1 & Appendix C	All deficiencies and non-conformances have been corrected of work in order to avoid covering deficiencies.
3.2	Final Follow-up Control Phase Inspection	01 45 00, 3.9.3	CQC-L5, D-L5, ER-L5,	D-L5, ER-L5	provide agenda > 48 hours prior to meeting	Final Follow-up Control Phase Inspection Checklist & Punch-Out 01 45 00.3.10.1 & Specifications Appendix C	Final Follow-up Control Phase Inspection checklist & punch out items have been completed.

(1): A HOLD POINT is a mandatory requirement - advance notification and acceptance (verbal/written) is required prior to continuing work.

(2): A NOTIFY POINT requires advance notification prior to performing the activity.

(3): The DISTRICT/PQACT inspection form / checklist is to be completed by the Contractor and member of the District/PQACT prior to the start of work. The inspection form/ checklist shall show no incompletions.

LEVEL 1 = CONTINUOUS INSPECTION OF ACTIVITIES, LEVEL 2 = MONITOR CRITICAL ACTIVITIES AND WITNESS TESTING, LEVEL 3 = RANDOM INSPECTION AND/OR AT COMPLETION OF WORK, LEVEL 4 = REVIEW OF PRECONSTRUCTION DOCUMENTATION, LEVEL 5 - REVIEW OF FINAL DOCUMENTS

CQC = CONTRACTOR QUALITY CONTROL SDQC = SPECIALIZED DISCIPLINE D = DISTRICT/PQACT ER = ENGINEER OF RECORD MCT = MANUFACTURER CERTIFICATION/TESTING

Approved By District/PQACT QA Manager: *D Roy Moseley* ***Date:*** *25July2018*

INSPECTION / TEST PLAN (ITP)
C-43 WEST BASIN STORAGE RESERVOIR
CONTRACT NUMBER: CN XXXXXXXXXXX

CIVIL WORKS

Location: Hendry County, FL

Date Prepared:

Revision:

Contractor: **Prepared By:**

TEMPORARY GEOTECHNICAL INSTRUMENTATION
Spec. Section: 31 09 00

Item No.	Attribute / Activity Description	Acceptance Criteria (Codes, Std., Spec., Drawings, Etc.)	INSPECTION REQUIREMENTS			Forms / Records / References (3)	Comments
			Inspect	Hold (1)	Notify (2)		
1	PRE-CONSTRUCTION						
1.1	Contractor's Quality Control Plan, Site Health & Safety Plan and Permits	Quality Control 01 45 00, Safety Requirements 01 35 26, Permits & Fees 00 31 46	D-L4	D-L4		Plans and Permits	Plans have been submitted by Contractor and approved by the District/PQACT. All pemits have been obtained to begin work.
1.2	Preconstruction Submittals	Submittals 01 33 00 31 09 00	D-L4, ER-L4	D-L4, ER-L4		Transmittal 01 45 00.3.10.1. & Appen. C, Submittals 01 45 00.3.10.1. & Appen. C, Submittal Register	All preconstruction submittals for this DFOW shall be submitted by the Contractor and Approved by the District/PQACT.
1.3	Request For Information (RFIs)	Quality Control 01 45 00	D-L4, ER-L4	D-L4, ER-L4		Request for Information & Log 01 45 00.3.10.1 & Appen. C	All RFIs for this DFOW shall be answered in order to clear up any questions before work begins.
1.4	Work Plans	Quality Control 01 45 00	D-L4, ER-L4	D-L4, ER-L4		Plans	All work plans for this DFOW shall be submitted by the Contractor and approved by the District/PQACT.
1.5	Activity Hazard Analysis (AHA)	Safety Requirements 01 35 26	D-L4, ER-L4	D-L4, ER-L4		AHA 01 45 00.3.10.1 & Appen. C	The AHA for this DFOW have been submitted by the Contractor.
1.6	Previous Work Deficiencies & Non-Conformances of previous DFOW	Quality Control 01 45 00	CQC-L5, SDQC-L5, D-L5, ER-L5, MCT-L5	D-L4, ER-L4		Deficiency Logs and NCN Logs 01 45 00.3.10.1 & Appen. C	All deficiencies and non-conformances shall be corrected of previous work in order to avoid covering deficiencies.
1.7	Final Follow-up Control Phase Inspection of previous DFOW	Quality Control 01 45 00	CQC-L5, SDQC-L5, D-L5, ER-L5, MCT-L5	D-L4, ER-L4	48 Hours	Final Follow-up Control Phase Inspection Checklist & Punch-Out	Final Follow-up Control Phase Inspection checklist & punch out items shall be completed of previous work.
1.8	Preparatory Control Phase Inspection	Quality Control 01 45 00	CQC-L5, SDQC-L5, D-L5, ER-L5, MCT-L5	D-L4, ER-L4	48 Hours	Preparatory Control Phase Inspection Worksheet 01 45 00.3.10.1 & Appen. C	Preparatory Control Phase Inspection/Meeing shall be performed successfully without open issues.
1.9	Certification	31 09 00, 1.7	CQC-L4, SQDC-L4, D-L4, ER-L4	D-L4, ER-L4	provide agenda > 48 hours prior to meeting	Preparatory Control Phase Inspection Worksheet 01 45 00.3.10.1 & Specifications Appendix C	The Contractor shall provide certified copies of all applicable instrumentation calibration data to the District for approval prior to installation of the equipment.
2	CONSTRUCTION						
2.1	Initial Control Phase Inspection	01 45 00, 3.7.2	CQC-L5, SDQC-L5, D-L5, ER-L5,	D-L5, ER-L5	provide agenda > 48 hours prior to meeting	Initial Control Phase Inspection Checklist 01 45 00.3.10.1, & Specifications Appendix C	An Initial Control Phase Inspection shall be performed shortly after the DFOW has begun to determine if the DFOW plan is working and if the workmanship of the workers is satisfactory and meets safety standards.
2.2	Daily Follow-up Control Phase Inspections	01 45 00, 3.7.3	CQC-L1	N/A	N/A	Daily Quality Control Report/ Daily Activity Log (DQCR) 01 45 00.3.10.1 & Specifications Appendix C	Contractor to perform daily Follow-up Control Phase Inspections and document findings on DQCR.
2.3	Piezometer Installation	31 09 00, 3.1	CQC-1, SDQC-1, D-1, ER-1	D-L1, ER-L1	N/A	Daily Quality Control Report/ Daily Activity Log (DQCR) 01 45 00.3.10.1 & Specifications Appendix C	Installation shall be performed as specified in 31 09 00, 3.1
2.4	Temporary Piezometer	31 09 00, 3.2	CQC-1, SDQC-1, D-1, ER-1	D-L1, ER-L1	N/A	Daily Quality Control Report/ Daily Activity Log (DQCR) 01 45 00.3.10.1 & Specifications Appendix C	Temporary Piezometers shal ladhere to 31 09 00, 3.2.
2.5	Settlement Plates	31 09 00, 3.3	CQC-1, SDQC-1, D-1, ER-1	D-L1, ER-L1	N/A	Daily Quality Control Report/ Daily Activity Log (DQCR) 01 45 00.3.10.1 & Specifications Appendix C	Settlement Plates shall adhere to 31 09 00, 3.3.

3	ACCEPTANCE						
3.1	Deficiencies & Non-Conformances of this DFOW	Quality Control 01 45 00	CQC-5, SDQC-5, D-5, ER-5	D-L5, ER-L4		Deficiency Logs and NCN Logs 01 45 00.3.10.1 & Appendix C	All deficiencies and non-conformances have been corrected of work in order to avoid covering deficiencies.
3.2	Final Follow-up Control Phase Inspection	01 45 00, 3.9.3	CQC-L5, D-L5, ER-L5,	D-L5, ER-L5	provide agenda > 48 hours prior to meeting	Final Follow-up Control Phase Inspection Checklist & Punch-Out 01 45 00.3.10.1 & Specifications Appendix C	Final Follow-up Control Phase Inspection checklist & punch out items have been completed.
3.3	Survey Monuments	31 09 00, 3.5	CQC-1, SDQC-1, D-1, ER-1	D-L1, ER-L1		Final Follow-up Control Phase Inspection Checklist & Punch-Out 01 45 00.3.10.1 & Specifications Appendix C	Contractor shall install Survey Monuments in accordance with the details shown and at the locations shown on the Drawings.
3.4	Warranty	31 09 00, 1.9	CQC-L5, D-L5, ER-L5,	D-L5, ER-L5		Final Follow-up Control Phase Inspection Checklist & Punch-Out 01 45 00.3.10.1 & Specifications Appendix C	Vibrating Wire Piezometers, cables, and Data Loggers shall be warrantied for not less than years.

(1): A HOLD POINT is a mandatory requirement - advance notification and acceptance (verbal/written) is required prior to continuing work.

(2): A NOTIFY POINT requires advance notification prior to performing the activity.

(3): The DISTRICT/PQACT inspection form / checklist is to be completed by the Contractor and member of the District/PQACT prior to the start of work. The inspection form/ checklist shall show no incompletions.

LEVEL 1 = CONTINUOUS INSPECTION OF ACTIVITIES, LEVEL 2 = MONITOR CRITICAL ACTIVITIES AND WITNESS TESTING, LEVEL 3 = RANDOM INSPECTION AND/OR AT COMPLETION OF WORK, LEVEL 4 = REVIEW OF PRECONSTRUCTION DOCUMENTATION, LEVEL 5 - REVIEW OF FINAL DOCUMENTS

CQC = CONTRACTOR QUALITY CONTROL SDQC = SPECIALIZED DISCIPLINE D = DISTRICT/PQACT ER = ENGINEER OF RECORD MCT = MANUFACTURER CERTIFICATION/TESTING

Approved By District/PQACT QA Manager: *DRoy Moseley* ***Date:*** *25July2018*

INSPECTION / TEST PLAN (ITP)
C-43 WEST BASIN STORAGE RESERVOIR
CONTRACT NUMBER: CN XXXXXXXXXX
CIVIL WORKS

Location: Hendry County, FL
Date Prepared:
Revision:
Contractor: **Prepared By:**

DAM EMBANKMENT FILL, SELECT FILL, BENTONITE FILL SOIL, GAP CLOSURE
Spec. Section: 31 00 00

Item No.	Attribute / Activity Description	Acceptance Criteria (Codes, Std., Spec., Drawings, Etc.)	INSPECTION REQUIREMENTS			Forms / Records / References (3)	Comments
			Inspect	Hold (1)	Notify (2)		
1	PRE-CONSTRUCTION						
1.1	Contractor's Quality Control Plan, Site Health & Safety Plan and Permits	Quality Control 01 45 00, Safety Requirements 01 35 26, Permits & Fees 00 31 46	D-L4	D-L4		Plans and Permits	Plans have been submitted by Contractor and approved by the District/PQACT. All pemits have been obtained to begin work.
1.2	Preconstruction Submittals	Submittals 01 33 00 31 00 00	D-L4, ER-L4	D-L4, ER-L4		Transmittal 01 45 00.3.10.1. & Appen. C, Submittals 01 45 00.3.10.1. & Appen. C, Submittal Register	All preconstruction submittals for this DFOW shall be submitted by the Contractor and Approved by the District/PQACT.
1.3	Request For Information (RFIs)	Quality Control 01 45 00	D-L4, ER-L4	D-L4, ER-L4		Request for Information & Log 01 45 00.3.10.1 & Appen. C	All RFIs for this DFOW shall be answered in order to clear up any questions before work begins.
1.4	Work Plans	Quality Control 01 45 00	D-L4, ER-L4	D-L4, ER-L4		Plans	All work plans for this DFOW shall be submitted by the Contractor and approved by the District/PQACT.
1.5	Activity Hazard Analysis (AHA)	Safety Requirements 01 35 26	D-L4, ER-L4	D-L4, ER-L4		AHA 01 45 00.3.10.1 & Appen. C	The AHA for this DFOW have been submitted by the Contractor.
1.6	Previous Work Deficiencies & Non-Conformances of previous DFOW	Quality Control 01 45 00	CQC-L5, SDQC-L5, D-L5, ER-L5, MCT-L5	D-L4, ER-L4		Deficiency Logs and NCN Logs 01 45 00.3.10.1 & Appen. C	All deficiencies and non-conformances shall be corrected of previous work in order to avoid covering deficiencies.
1.7	Final Follow-up Control Phase Inspection of previous DFOW	Quality Control 01 45 00	CQC-L5, SDQC-L5, D-L5, ER-L5, MCT-L5	D-L4, ER-L4	48 Hours	Final Follow-up Control Phase Inspection Checklist & Punch-Out	Final Follow-up Control Phase Inspection checklist & punch out items shall be completed of previous work.
1.8	Preparatory Control Phase Inspection	Quality Control 01 45 00	CQC-L5, SDQC-L5, D-L5, ER-L5, MCT-L5	D-L4, ER-L4	48 Hours	Preparatory Control Phase Inspection Worksheet 01 45 00.3.10.1 & Appen. C	Preparatory Control Phase Inspection/Meeing shall be performed successfully without open issues.
2	CONSTRUCTION						
2.1	Initial Control Phase Inspection	01 45 00, 3.7.2	CQC-L5, SDQC-L5, D-L5, ER-L5,	D-L5, ER-L5	provide agenda > 48 hours prior to meeting	Initial Control Phase Inspection Checklist 01 45 00.3.10.1, & Specifications Appendix C	An Initial Control Phase Inspection shall be performed shortly after the DFOW has begun to determine if the DFOW plan is working and if the workmanship of the workers is satisfactory and meets safety standards.
2.2	Daily Follow-up Control Phase Inspections	01 45 00, 3.7.3	CQC-L1, D-l1	N/A	N/A	Daily Quality Control Report/ Daily Activity Log (DQCR) 01 45 00.3.10.1 & Specifications Appendix C	Contractor to perform daily Follow-up Control Phase Inspections and document findings on DQCR.
2.3	GENERAL EXCAVATION	31 00 00 - 3.2	CQC-L1, SDQC-L1, D-L1, ER-L1,			Daily Quality Control Report/ Daily Activity Log (DQCR) 01 45 00.3.10.1 & Specifications Appendix C	During construction, perform excavation and fill in a manner and sequence that will provide proper drainage at all times.
2.4	Temporary Fill Stockpiles	31 00 00 - 3.2.1	CQC-L4, SQDC-L4, D-L4, ER-L4	D-L4, ER-L4		Daily Quality Control Report/ Daily Activity Log (DQCR) 01 45 00.3.10.1 & Specifications Appendix C & In Writing Qualification	Each stockpile of material is to be qualified in writing by the Contractor, with supporting laboratory testing documentation, and approved by the District prior to placement in the embankment.
2.5	Drainage Structures	31 00 00 - 3.2.2	CQC-L1, SDQC-L1, D-L1, ER-L1,			Daily Quality Control Report/ Daily Activity Log (DQCR) 01 45 00.3.10.1 & Specifications Appendix C	Make excavations to the lines, grades, and elevations shown on the Drawings. The District shall have authority to direct changes to excavation limits.
2.6	Drainage	31 00 00 - 3.2.3	CQC-L1, SDQC-L1, D-L1, ER-L1,			Daily Quality Control Report/ Daily Activity Log (DQCR) 01 45 00.3.10.1 & Specifications Appendix C	The Contractor shall manage site surface water during construction to keep soil materials sufficiently dry.

2.7	Drainage	31 00 00 - 3.2.3	CQC-L1, SDQC-L1, D-L1, ER-L1,			Daily Quality Control Report/ Daily Activity Log (DQCR) 01 45 00.3.10.1 & Specifications Appendix C	When working platforms for equipment operation and support for subsequent construction features become unstable due to excess moisture, remove unstable material to 12 inches deep or the depth required based upon field conditions existing at the time of removal, and provide new soil material as specified herein.
2.8	Dewatering	31 00 00 - 3.2.4	CQC-L1, SDQC-L1, D-L1, ER-L1,			Daily Quality Control Report/ Daily Activity Log (DQCR) 01 45 00.3.10.1 & Specifications Appendix C	Control groundwater flowing toward or into excavations to prevent sloughing of excavation slopes and walls, boils, uplift and heave in the excavation and to eliminate interference with orderly progress of construction.
2.9	Dewatering	31 00 00 - 3.2.4	CQC-L1, SDQC-L1, D-L1, ER-L1,			Daily Quality Control Report/ Daily Activity Log (DQCR) 01 45 00.3.10.1 & Specifications Appendix C	While the excavation is open, maintain the water level continuously at least 3 feet below the working level.
2.10	Bottom Preparation	31 00 00 - 3.2.5.1	CQC-L1, SDQC-L1, D-L1, ER-L1,			Daily Quality Control Report/ Daily Activity Log (DQCR) 01 45 00.3.10.1 & Specifications Appendix C	Remove stones of 1 inch or greater in any dimension, or as recommended by the pipe manufacturer, whichever is smaller, to avoid point bearing.
2.11	Removal of Unyielding Material	31 00 00 - 3.2.5.2	CQC-L1, SDQC-L1, D-L1, ER-L1,			Daily Quality Control Report/ Daily Activity Log (DQCR) 01 45 00.3.10.1 & Specifications Appendix C	Where rock is encountered in the bottom of the trench, remove such material 6 inches below the required grade and replaced with suitable materials as provided in paragraph EMBANKMENT FILLING AND COMPACTION.
2.12	Removal of Unstable Material	31 00 00 - 3.2.5.3	CQC-L1, SDQC-L1, D-L1, ER-L1,			Daily Quality Control Report/ Daily Activity Log (DQCR) 01 45 00.3.10.1 & Specifications Appendix C	Where unstable material is encountered in the bottom of the trench, remove such material to a depth of at least 12 inches, for the full width of the bottom of the excavation or 3 feet, whichever is larger, and replace it to the proper grade with Embankment Fill material as provided in paragraph EMBANKMENT FILLING AND COMPACTION.
2.13	Excavation for Appurtenances	31 00 00 - 3.2.5.4	CQC-L1, SDQC-L1, D-L1, ER-L1,			Daily Quality Control Report/ Daily Activity Log (DQCR) 01 45 00.3.10.1 & Specifications Appendix C	Remove loose rock. When concrete or masonry is to be placed in an excavated area, take special care not to disturb the bottom of the excavation. Do not excavate to the final grade level until just before the concrete or masonry is to be placed.
2.14	SELECTION OF BORROW MATERIAL	31 00 00 - 3.3	CQC-L1, SDQC-L1, D-L1, ER-L1,			Daily Quality Control Report/ Daily Activity Log (DQCR) 01 45 00.3.10.1 & Specifications Appendix C	No borrow excavations are to be made within 200 feet of the inside toe of the dam.
2.15	BORROW STOCKPILE AREAS	31 00 00 - 3.4	CQC-L1, SDQC-L1, D-L1, ER-L1,			Daily Quality Control Report/ Daily Activity Log (DQCR) 01 45 00.3.10.1 & Specifications Appendix C	If the Contractor fails to protect the stockpiles and any material becomes unsuitable for its intended use, remove and replace such material with satisfactory material from approved sources at no cost to the District.
2.16	EMBANKMENT FILLING AND COMPACTION	31 00 00 - 3.7	CQC-L1, SDQC-L1, D-L1, ER-L1,			Daily Quality Control Report/ Daily Activity Log (DQCR) 01 45 00.3.10.1 & Specifications Appendix C	Place Embankment Fill, Clean Sand, or Filter Sand in successive horizontal layers of loose material not more than 12 inches in depth. Lift thickness for Select Fill materials shall be not more than 8 inches in depth.
2.17	EMBANKMENT FILLING AND COMPACTION	31 00 00 - 3.7	CQC-L1, SDQC-L1, D-L1, ER-L1,			Daily Quality Control Report/ Daily Activity Log (DQCR) 01 45 00.3.10.1 & Specifications Appendix C	Embankment Fill materials having Unified Soil Classification System (ASTM D2487) Group Symbols of SC and/or SM shall not be placed within 10 feet (measured horizontally) from the finished earth slopes of the dam.
2.18	COMPACTION - Embankment Fill	31 00 00 - 3.7	CQC-L1, SDQC-L1, D-L1, ER-L1,			Daily Quality Control Report/ Daily Activity Log (DQCR) 01 45 00.3.10.1 & Specifications Appendix C	All Embankment Fill material must be within the range of -3 to +3 percent of optimum moisture content at the time of compaction, and must be compacted to at least 95 percent of the maximum dry density determined in accordance with Modified Proctor (ASTM D1557).
2.19	COMPACTION - Select Fill	31 00 00 - 3.7	CQC-L1, SDQC-L1, D-L1, ER-L1,			Daily Quality Control Report/ Daily Activity Log (DQCR) 01 45 00.3.10.1 & Specifications Appendix C	All Select Fill material must be within the range of -1 to +2 percent of optimum moisture content at the time of compaction, and must be compacted to at least 98 percent of the maximum dry density determined in accordance with Standard Proctor (ASTM D698).
2.20	COMPACTION - Clean Sand and Filter Sand	31 00 00 - 3.7	CQC-L1, SDQC-L1, D-L1, ER-L1,			Daily Quality Control Report/ Daily Activity Log (DQCR) 01 45 00.3.10.1 & Specifications Appendix C	Clean Sand and Filter Sand materials are to be compacted to not less than 80 percent Relative Compaction determined in accordance with ASTM D4253.
2.21	EMBANKMENT FILLING AND COMPACTION	31 00 00 - 3.7	CQC-L1, SDQC-L1, D-L1, ER-L1,			Daily Quality Control Report/ Daily Activity Log (DQCR) 01 45 00.3.10.1 & Specifications Appendix C	At the beginning of each work day, the previously placed and compacted earth lift shall be scarified to a depth not less than 6 inches, and the scarified surface shall be moisture conditioned to meet the specification requirements.

2.22	EMBANKMENT FILLING AND COMPACTION	31 00 00 - 3.7	CQC-L1, SDQC-L1, D-L1, ER-L1,			Daily Quality Control Report/ Daily Activity Log (DQCR) 01 45 00.3.10.1 & Specifications Appendix C	The initial lift of fill for each work day shall be 6 inches thick. Subsequent lifts shall be no greater than 12 inches thick (8 inches for Select Fill), and the surface of subsequent lifts shall be scarified to a depth of 3 inches to promote bonding between lifts.
2.23	SPECIAL REQUIREMENTS	31 00 00 - 3.8	CQC-L1, SDQC-L1, D-L1, ER-L1,	D-L4, ER-LI4		Daily Quality Control Report/ Daily Activity Log (DQCR) 01 45 00.3.10.1 & Specifications Appendix C	Construction of the dam above elevation +47 feet cannot resume until the foundation soils have reached at least 90 percent consolidation as determined by the temporary geotechnical instrumentation.
2.24	SPECIAL REQUIREMENTS	31 00 00 - 3.8	CQC-L4, SQDC-L4, D-L4, ER-L4	D-L4, ER-LI4		Daily Quality Control Report/ Daily Activity Log (DQCR) 01 45 00.3.10.1 & Specifications Appendix C	Construction of the soil-cement cannot commence until the temporary geotechnical instrumentation shows that the foundation soils have achieved 90 percent or more consolidation after the dam reaches elevation +54 feet.
2.25	SPECIAL REQUIREMENTS	31 00 00 - 3.8	CQC-L4, SQDC-L4, D-L4, ER-L4	D-L4, ER-LI4		Transmittal 01 45 00.3.10.1. & Appen. C, Submittals 01 45 00.3.10.1. & Appen. C, D Submittal Register	The Contractor shall submit the document, Determination of Waiting Period Duration, for each reach of the dam shown on the Drawings entitled Temporary Geotechnical Instrumentation. This document is to be prepared by and signed and sealed by the Contractor's Geotechnical Engineer
2.26	FINISHING	31 00 00 - 3.9	CQC-L4, SQDC-L4, D-L4, ER-L4	D-L4, ER-LI4		Daily Quality Control Report/ Daily Activity Log (DQCR) 01 45 00.3.10.1 & Specifications Appendix C	Provide the degree of finish for graded areas within 0.1 foot of the grades and elevations indicated except that the degree of finish for subgrades specified in paragraph SUBGRADE PREPARATION.
2.27	TESTING	31 00 00 - 3.10	CQC-L4, SQDC-L4, D-L4, ER-L4	D-L4, ER-LI4		Daily Quality Control Report/ Daily Activity Log (DQCR) 01 45 00.3.10.1 & Specifications Appendix C	Determine field in-place density in accordance with ASTM D6938 and ASTM D2937. Establish calibration curves for each nuclear gauge using the results from ASTM D6938 and ASTM D1556/D1556M. Adjust results from the nuclear gauge using the calibration curve. Use the Drive Cylinder Method (ASTM D2937) only for soft, fine-grained, cohesive soils.
2.28	TESTING	31 00 00 - 3.10	CQC-L4, SQDC-L4, D-L4, ER-L4	D-L4, ER-LI4		Daily Quality Control Report/ Daily Activity Log (DQCR) 01 45 00.3.10.1 & Specifications Appendix C	When test results indicate that compaction is not as specified, remove the material, replace and recompact to meet specification requirements.
2.29	TESTING - In-Place Densities	31 00 00 - 3.10.2	CQC-L4, SQDC-L4, D-L4, ER-L4	D-L4, ER-LI4		Daily Quality Control Report/ Daily Activity Log (DQCR) 01 45 00.3.10.1 & Specifications Appendix C	Material Type Location of Material Test Frequency Embankment Fill - Dams and Adjacent to Structures - 1 test per 1,000 cubic yards. Select Fill - Dams and Adjacent to Structures - 1 test per 500 cubic yards. Clean Sand - Beneath Dam Slope Protection and Blanket Drain - 1 test per 2,000 cubic yards. Filter Sands - Embankment Drains, Beneath Dam Slope Protection and Pressure Relief System (Blanket Drain only) - 1 test per 2,000 cubic yards. Note: Each In-Place Density test shall be accompanied by the laboratory test for Amount of Material in Soils Finer than the No. 200 Sieve (ASTM D1140).
2.30	TESTING -Moisture Contents	31 00 00 - 3.10.3	CQC-L4, SQDC-L4, D-L4, ER-L4	D-L4, ER-LI4		Daily Quality Control Report/ Daily Activity Log (DQCR) 01 45 00.3.10.1 & Specifications Appendix C	In Select Fill stockpiles, perform a minimum of two tests per day material being placed during stable weather conditions. During wet weather periods, perform tests as needed to verify uniform moisture content conditions, and that moisture contents are within 2 percent of the optimum for compaction for the specific materials.
2.31	TESTING - Permeability Testing	31 00 00 - 3.10	CQC-L4, SQDC-L4, D-L4, ER-L4	D-L4, ER-LI4		Daily Quality Control Report/ Daily Activity Log (DQCR) 01 45 00.3.10.1 & Specifications Appendix C	Materials to be utilized for Select Fill shall be tested for the parameters and at the frequencies shown in Section 3.10.1 of this specification. Further, representative samples for these uses shall be tested for permeability in accordance with ASTM D5084, at a frequency of one test per 10,000 cubic yards.

3	ACCEPTANCE						
3.1	Deficiencies & Non-Conformances of this DFOW	Quality Control 01 45 00	CQC-5, SDQC-5, D-5, ER-5, MCT-5	D-L5, ER-L4		Deficiency Logs and NCN Logs 01 45 00.3.10.1 & Appendix C	All deficiencies and non-conformances have been corrected of work in order to avoid covering deficiencies.
3.2	Final Follow-up Control Phase Inspection	01 45 00, 3.9.3	CQC-L5, D-L5, ER-L5,	D-L5, ER-L5	provide agenda > 48 hours prior to meeting	Final Follow-up Control Phase Inspection Checklist & Punch-Out 01 45 00.3.10.1 & Specifications Appendix C	Final Follow-up Control Phase Inspection checklist & punch out items have been completed.

(1): A HOLD POINT is a mandatory requirement - advance notification and acceptance (verbal/written) is required prior to continuing work.

(2): A NOTIFY POINT requires advance notification prior to performing the activity.

(3): The DISTRICT/PQACT inspection form / checklist is to be completed by the Contractor and member of the District/PQACT prior to the start of work. The inspection form/ checklist shall show no incompletions.

LEVEL 1 = CONTINUOUS INSPECTION OF ACTIVITIES, LEVEL 2 = MONITOR CRITICAL ACTIVITIES AND WITNESS TESTING, LEVEL 3 = RANDOM INSPECTION AND/OR AT COMPLETION OF WORK, LEVEL 4 = REVIEW OF PRECONSTRUCTION DOCUMENTATION, LEVEL 5 - REVIEW OF FINAL DOCUMENTS

CQC = CONTRACTOR QUALITY CONTROL SDQC = SPECIALIZED DISCIPLINE D = DISTRICT/PQACT ER = ENGINEER OF RECORD MCT = MANUFACTURER CERTIFICATION/TESTING

Approved By District/PQACT QA Manager: *DRoy Moseley* ***Date:*** *29July2018*

INSPECTION / TEST PLAN (ITP)
C-43 WEST BASIN STORAGE RESERVOIR
CONTRACT NUMBER: CN XXXXXXXXXX

CIVIL WORKS

Location: Hendry County, FL

Date Prepared:

Revision:

Contractor: Prepared By:

DEWATERING
Spec. Section: 31 52 10

Item No.	Attribute / Activity Description	Acceptance Criteria (Codes, Std., Spec., Drawings, Etc.)	INSPECTION REQUIREMENTS			Forms / Records / References (3)	Comments
			Inspect	Hold (1)	Notify (2)		
1	PRE-CONSTUCTION						
1.1	Contractor's Quality Control Plan, Site Health & Safety Plan and Permits	Quality Control 01 45 00, Safety Requirements 01 35 26, Permits & Fees 00 31 46	D-L4	D-L4		Plans and Permits	Plans have been submitted by Contractor and approved by the District/PQACT. All pemits have been obtained to begin work.
1.2	Preconstruction Submittals	Submittals 01 33 00 31 52 10	D-L4, ER-L4	D-L4, ER-L4		Transmittal 01 45 00.3.10.1. & Appen. C, Submittals 01 45 00.3.10.1. & Appen. C, Submittal Register	All preconstruction submittals for this DFOW shall be submitted by the Contractor and Approved by the District/PQACT.
1.3	Request For Information (RFIs)	Quality Control 01 45 00	D-L4, ER-L4	D-L4, ER-L4		Request for Information & Log 01 45 00.3.10.1 & Appen. C	All RFIs for this DFOW shall be answered in order to clear up any questions before work begins.
1.4	Work Plans	Quality Control 01 45 00	D-L4, ER-L4	D-L4, ER-L4		Plans	All work plans for this DFOW shall be submitted by the Contractor and approved by the District/PQACT.
1.5	Activity Hazard Analysis (AHA)	Safety Requirements 01 35 26	D-L4, ER-L4	D-L4, ER-L4		AHA 01 45 00.3.10.1 & Appen. C	The AHA for this DFOW have been submitted by the Contractor.
1.6	Previous Work Deficiencies & Non-Conformances of previous DFOW	Quality Control 01 45 00	CQC-L5, SDQC-L5, D-L5, ER-L5, MCT-L5	D-L4, ER-L4		Deficiency Logs and NCN Logs 01 45 00.3.10.1 & Appen. C	All deficiencies and non-conformances shall be corrected of previous work in order to avoid covering deficiencies.
1.7	Final Follow-up Control Phase Inspection of previous DFOW	Quality Control 01 45 00	CQC-L5, SDQC-L5, D-L5, ER-L5, MCT-L5	D-L4, ER-L4	48 Hours	Final Follow-up Control Phase Inspection Checklist & Punch-Out	Final Follow-up Control Phase Inspection checklist & punch out items shall be completed of previous work.
1.8	Preparatory Control Phase Inspection	Quality Control 01 45 00	CQC-L5, SDQC-L5, D-L5, ER-L5, MCT-L5	D-L4, ER-L4	48 Hours	Preparatory Control Phase Inspection Worksheet 01 45 00.3.10.1 & Appen. C	Preparatory Control Phase Inspection/Meeing shall be performed successfully without open issues.
2	CONSTRUCTION						
2.1	Initial Control Phase Inspection	01 45 00	CQC-L5, SDQC-L5, D-L5, ER-L5		48 Hours	Initial Control Phase Inspection Agenda 01 45 00.1.10.1.13, Initial Control Phase Inspection Checklist	An Initial Control Phase Inspection shall be performed shortly after the DFOW has begun to determine if the DFOW plan is working and if the workmanship of the workers is satisfactory and meets safety standards.
2.2	Dewatering Installation Activities	31 52 10 & 01 45 00, 3.10.1.1	CQC-L1, SDQC-L1, D-L1, ER-L3			01 45 00 Appendix C	Contractor to perform daily Follow-up Control Phase Inspections and document findings on DQCR.
2.3	Monitor Groundwater Levels	35 52 10, 1.4.1	CQC-L1, SDQC-L1, D-L2, ER-L3			01 45 00 Appendix D	Daily groundwater level readings summarized and submitted to the District on a weekly basis
2.4	Dewatering Discharge Rate	35 52 10, 3.1.1.2.d	CQC-L1, SDQC-L1, D-L2, ER-L3			01 45 00 Appendix D	Discharge rates measured and logged every 24 hours
3	ACCEPTANCE						
3.1	Final Follow-up Control Phase Inspection	01 45 00	CQC-L5, D-L5, ER-L5,	D-L5, ER-L5	48 Hours	Final Follow-up Control Phase Inspection Checklist & Punch-Out	Final Follow-up Control Phase Inspection checklist & punch out items have been completed.

3.2	WARRANTY	35 52 10, 1.10	CQC-L4, SQDC-L4, D-L4, ER-L4	D-L4, ER-L4		Transmittal 01 45 00.3.10.1. & Appen. C, Submittals 01 45 00.3.10.1. & Appen. C, D Submittal Register	The warranty shall meet the requirements specified in SECTION 01 61 03 EQUIPMENT AND MATERIALS.
3.3	As-built Records of all drill holes, wells, and boring logs	35 52 10, 1.4.1	D-L5, ER-L5		5 Days after installation	01 45 00 Appendix D	

(1): A HOLD POINT is a mandatory requirement - advance notification and acceptance (verbal/written) is required prior to continuing work.

(2): A NOTIFY POINT requires advance notification prior to performing the activity.

(3): The DISTRICT/PQACT inspection form / checklist is to be completed by the Contractor and member of the District/PQACT prior to the start of work. The inspection form/ checklist shall show no incompletions.

LEVEL 1 = CONTINUOUS INSPECTION OF ACTIVITIES, LEVEL 2 = MONITOR CRITICAL ACTIVITIES AND WITNESS TESTING, LEVEL 3 = RANDOM INSPECTION AND/OR AT COMPLETION OF WORK, LEVEL 4 = REVIEW OF PRECONSTRUCTION DOCUMENTATION, LEVEL 5 - REVIEW OF FINAL DOCUMENTS

CQC = CONTRACTOR QUALITY CONTROL SDQC = SPECIALIZED DISCIPLINE D = DISTRICT/PQACT ER = ENGINEER OF RECORD MCT = MANUFACTURER CERTIFICATION/TESTING

Approved By District/PQACT QA Manager: *D Roy Moseley* ***Date:*** *26July2018*

INSPECTION / TEST PLAN (ITP)
C-43 WEST BASIN STORAGE RESERVOIR
CONTRACT NUMBER: CN XXXXXXXXXX
CIVIL WORKS

Location: Hendry County, FL

Date Prepared:

Revision:

Contractor: **Prepared By:**

COFFERDAM
Spec. Section: 31 52 10

Item No.	Attribute / Activity Description	Acceptance Criteria (Codes, Std., Spec., Drawings, Etc.)	INSPECTION REQUIREMENTS			Forms / Records / References (3)	Comments
			Inspect	Hold (1)	Notify (2)		
1	PRE-CONSTUCTION						
1.1	Contractor's Quality Control Plan, Site Health & Safety Plan and Permits	Quality Control 01 45 00, Safety Requirements 01 35 26, Permits & Fees 00 31 46	D-L4	D-L4		Plans and Permits	Plans have been submitted by Contractor and approved by the District/PQACT. All pemits have been obtained to begin work.
1.2	Preconstruction Submittals	Submittals 01 33 00 31 52 10	D-L4, ER-L4	D-L4, ER-L4		Transmittal 01 45 00.3.10.1. & Appen. C, Submittals 01 45 00.3.10.1. & Appen. C, Submittal Register	All preconstruction submittals for this DFOW shall be submitted by the Contractor and Approved by the District/PQACT.
1.3	Request For Information (RFIs)	Quality Control 01 45 00	D-L4, ER-L4	D-L4, ER-L4		Request for Information & Log 01 45 00.3.10.1 & Appen. C	All RFIs for this DFOW shall be answered in order to clear up any questions before work begins.
1.4	Work Plans	Quality Control 01 45 00	D-L4, ER-L4	D-L4, ER-L4		Plans	All work plans for this DFOW shall be submitted by the Contractor and approved by the District/PQACT.
1.5	Activity Hazard Analysis (AHA)	Safety Requirements 01 35 26	D-L4, ER-L4	D-L4, ER-L4		AHA 01 45 00.3.10.1 & Appen. C	The AHA for this DFOW have been submitted by the Contractor.
1.6	Previous Work Deficiencies & Non-Conformances of previous DFOW	Quality Control 01 45 00	CQC-L5, SDQC-L5, D-L5, ER-L5, MCT-L5	D-L4, ER-L4		Deficiency Logs and NCN Logs 01 45 00.3.10.1 & Appen. C	All deficiencies and non-conformances shall be corrected of previous work in order to avoid covering deficiencies.
1.7	Final Follow-up Control Phase Inspection of previous DFOW	Quality Control 01 45 00	CQC-L5, SDQC-L5, D-L5, ER-L5, MCT-L5	D-L4, ER-L4	48 Hours	Final Follow-up Control Phase Inspection Checklist & Punch-Out	Final Follow-up Control Phase Inspection checklist & punch out items shall be completed of previous work.
1.8	Preparatory Control Phase Inspection	Quality Control 01 45 00	CQC-L5, SDQC-L5, D-L5, ER-L5, MCT-L5	D-L4, ER-L4	48 Hours	Preparatory Control Phase Inspection Worksheet 01 45 00.3.10.1 & Appen. C	Preparatory Control Phase Inspection/Meeing shall be performed successfully without open issues.
2	CONSTRUCTION						
2.1	Initial Control Phase Inspection	01 45 00	CQC-L5, SDQC-L5, D-L5, ER-L5	D-L4, ER-L4	48 Hours	Initial Control Phase Inspection Agenda 01 45 00.1.10.1.13, Initial Control Phase Inspection Checklist	An Initial Control Phase Inspection shall be performed shortly after the DFOW has begun to determine if the DFOW plan is working and if the workmanship of the workers is satisfactory and meets safety standards.
2.2	Cofferdam Installation and Excavation	31 52 10, 3.4	CQC-L1, SDQC-L1, D-L1, ER-L3	D-L1, ER-L1		Daily Quality Control Report/ Daily Activity Log (DQCR) 01 45 00.3.10.1 & Specifications Appendix C	Contractor to perform daily Follow-up Control Phase Inspections and document findings on DQCR.
2.3	Shoring Wall Monitoring	31 52 10, 3.4.6	CQC-L1, SDQC-L1, D-L1, ER-L3	D-L1, ER-L1		Daily Quality Control Report/ Daily Activity Log (DQCR) 01 45 00.3.10.1 & Specifications Appendix C	Contractor to establish horizontal control points on the shoring and perform two baseline surveys followed by once/week until backfilled

3	ACCEPTANCE						
3.1	Final Follow-up Control Phase Inspection	01 45 00	CQC-L5, D-L5, ER-L5,	D-L5, ER-L5	48 Hours	Final Follow-up Control Phase Inspection Checklist & Punch-Out	Final Follow-up Control Phase Inspection checklist & punch out items have been completed.

(1): A HOLD POINT is a mandatory requirement - advance notification and acceptance (verbal/written) is required prior to continuing work.

(2): A NOTIFY POINT requires advance notification prior to performing the activity.

(3): The DISTRICT/PQACT inspection form / checklist is to be completed by the Contractor and member of the District/PQACT prior to the start of work. The inspection form/ checklist shall show no incompletions.

LEVEL 1 = CONTINUOUS INSPECTION OF ACTIVITIES, LEVEL 2 = MONITOR CRITICAL ACTIVITIES AND WITNESS TESTING, LEVEL 3 = RANDOM INSPECTION AND/OR AT COMPLETION OF WORK, LEVEL 4 = REVIEW OF PRECONSTRUCTION DOCUMENTATION, LEVEL 5 - REVIEW OF FINAL DOCUMENTS

CQC = CONTRACTOR QUALITY CONTROL SDQC = SPECIALIZED DISCIPLINE D = DISTRICT/PQACT ER = ENGINEER OF RECORD MCT = MANUFACTURER CERTIFICATION/TESTING

Approved By District/PQACT QA Manager: *DRoy Moseley* ***Date:*** *26July2018*

INSPECTION / TEST PLAN (ITP)
C-43 WEST BASIN STORAGE RESERVOIR
CONTRACT NUMBER: CN XXXXXXXXXX
CIVIL WORKS

Location: Hendry County, FL
Date Prepared:
Revision:
Contractor: **Prepared By:**

PRESSURE RELIEF SYSTEM
Spec. Section: 35 41 21

Item No.	Attribute / Activity Description	Acceptance Criteria (Codes, Std., Spec., Drawings, Etc.)	INSPECTION REQUIREMENTS			Forms / Records / References (3)	Comments
			Inspect	Hold (1)	Notify (2)		
1	PRE-CONSTRUCTION						
1.1	Contractor's Quality Control Plan, Site Health & Safety Plan and Permits	Quality Control 01 45 00, Safety Requirements 01 35 26, Permits & Fees 00 31 46	D-L4	D-L4		Plans and Permits	Plans have been submitted by Contractor and approved by the District/PQACT. All pemits have been obtained to begin work.
1.2	Preconstruction Submittals	Submittals 01 33 00 35 41 21	D-L4, ER-L4	D-L4, ER-L4		Transmittal 01 45 00.3.10.1. & Appen. C, Submittals 01 45 00.3.10.1. & Appen. C, Submittal Register	All preconstruction submittals for this DFOW shall be submitted by the Contractor and Approved by the District/PQACT.
1.3	Request For Information (RFIs)	Quality Control 01 45 00	D-L4, ER-L4	D-L4, ER-L4		Request for Information & Log 01 45 00.3.10.1 & Appen. C	All RFIs for this DFOW shall be answered in order to clear up any questions before work begins.
1.4	Work Plans	Quality Control 01 45 00	D-L4, ER-L4	D-L4, ER-L4		Plans	All work plans for this DFOW shall be submitted by the Contractor and approved by the District/PQACT.
1.5	Activity Hazard Analysis (AHA)	Safety Requirements 01 35 26	D-L4, ER-L4	D-L4, ER-L4		AHA 01 45 00.3.10.1 & Appen. C	The AHA for this DFOW have been submitted by the Contractor.
1.6	Previous Work Deficiencies & Non-Conformances of previous DFOW	Quality Control 01 45 00	CQC-L5, SDQC-L5, D-L5, ER-L5, MCT-L5	D-L4, ER-L4		Deficiency Logs and NCN Logs 01 45 00.3.10.1 & Appen. C	All deficiencies and non-conformances shall be corrected of previous work in order to avoid covering deficiencies.
1.7	Final Follow-up Control Phase Inspection of previous DFOW	Quality Control 01 45 00	CQC-L5, SDQC-L5, D-L5, ER-L5, MCT-L5	D-L4, ER-L4	48 Hours	Final Follow-up Control Phase Inspection Checklist & Punch-Out	Final Follow-up Control Phase Inspection checklist & punch out items shall be completed of previous work.
1.8	Preparatory Control Phase Inspection	Quality Control 01 45 00	CQC-L5, SDQC-L5, D-L5, ER-L5, MCT-L5	D-L4, ER-L4	48 Hours	Preparatory Control Phase Inspection Worksheet 01 45 00.3.10.1 & Appen. C	Preparatory Control Phase Inspection/Meeing shall be performed successfully without open issues.
2	CONSTRUCTION						
2.1	Initial Control Phase Inspection	01 45 00, 3.7.2	CQC-L5, SDQC-L5, D-L5, ER-L5,	D-L5, ER-L5	provide agenda > 48 hours prior to meeting	Initial Control Phase Inspection Checklist 01 45 00.3.10.1, & Specifications Appendix C	An Initial Control Phase Inspection shall be performed shortly after the DFOW has begun to determine if the DFOW plan is working and if the workmanship of the
2.2	Daily Follow-up Control Phase Inspections	01 45 00, 3.7.3	CQC-L1	N/A	N/A	Daily Quality Control Report/ Daily Activity Log (DQCR) 01 45 00.3.10.1 & Specifications Appendix C	Contractor to perform daily Follow-up Control Phase Inspections and document findings on DQCR.
2.3	PREPARATION	35 41 21, 3.1.1	CQC-L1, SQDC-L1, D-L1, ER-L1	D-L1, ER-L1		Daily Quality Control Report/ Daily Activity Log (DQCR) 01 45 00.3.10.1 & Specifications Appendix C	Prior to beginning the work, the Intake Canal work area shall be excavated to the grade consistent with the bottom of the Rip Rap section, the Townsend Canal Bench shall be excavated to +8 feet, and the area southeast of the S-476 Pumping Station shall be excavated to elevation +15 feet. All these areas shall be fully dewatered to enable dry construction activities.
2.4	PREPARATION	35 41 21, 3.1.2	CQC-L1, SQDC-L1, D-L1, ER-L1	D-L1, ER-L1		Daily Quality Control Report/ Daily Activity Log (DQCR) 01 45 00.3.10.1 & Specifications Appendix C	Contractor shall layout alignment of and locations of Sand Relief Columns in accordance with locations shown on the Drawings.
2.5	Set Casing	35 41 21, 3.2.1	CQC-L1, SQDC-L1, D-L1, ER-L1	D-L1, ER-L1		Daily Quality Control Report/ Daily Activity Log (DQCR) 01 45 00.3.10.1 & Specifications Appendix C	Contractor shall drive, spin, vibrate or otherwise install temporary steel casings to the tip elevation of Sand Relief Columns shown on the Drawings.
2.6	Set Casing	35 41 21, 3.2.1	CQC-L1, SQDC-L1, D-L1, ER-L1	D-L1, ER-L1		Daily Quality Control Report/ Daily Activity Log (DQCR) 01 45 00.3.10.1 & Specifications Appendix C	Casing length shall provide for at least 4 feet of stick up above ground surface for safety purposes.

2.7	Set Casing	35 41 21, 3.2.1	CQC-L1, SQDC-L1, D-L1, ER-L1	D-L1, ER-L1		Daily Quality Control Report/ Daily Activity Log (DQCR) 01 45 00.3.10.1 & Specifications Appendix C	The casings are to be installed with an out of plumbness of not more than 2 percent.
2.8	Excavation	35 41 21, 3.2.2	CQC-L1, SQDC-L1, D-L1, ER-L1	D-L1, ER-L1		Daily Quality Control Report/ Daily Activity Log (DQCR) 01 45 00.3.10.1 & Specifications Appendix C	Excavate to the elevation shown on the drawing for each Sand Relief Column.
2.9	Excavation	35 41 21, 3.2.2	CQC-L1, SQDC-L1, D-L1, ER-L1	D-L1, ER-L1		Daily Quality Control Report/ Daily Activity Log (DQCR) 01 45 00.3.10.1 & Specifications Appendix C	Contractor shall probe bottom of each excavation at four equally spaced locations around the perimeter of casing and once in the center to verify that the design tip elevation has been reached. A maximum tolerance of 0.5 feet shall be considered acceptable.
2.10	Excavation	35 41 21, 3.2.2	CQC-L1, SQDC-L1, D-L1, ER-L1	D-L1, ER-L1		Daily Quality Control Report/ Daily Activity Log (DQCR) 01 45 00.3.10.1 & Specifications Appendix C	Water shall be introduced to the casings to maintain hydrostatic head above the piezometric heads in the dewatered strata in the vicinity of the tip elevation of the columns.
2.11	Backfill	35 41 21, 3.2.3	CQC-L1, SQDC-L1, D-L1, ER-L1	D-L1, ER-L1		Daily Quality Control Report/ Daily Activity Log (DQCR) 01 45 00.3.10.1 & Specifications Appendix C	Backfill meeting the requirements of Paragraph SAND RELIEF COLUMN BACKFILL of this specification shall be placed using a tremie pipe that extends to a depth of not more than 10 feet above the excavation bottom or active backfill surface.
2.12	Backfill	35 41 21, 3.2.3	CQC-L1, SQDC-L1, D-L1, ER-L1	D-L1, ER-L1		Daily Quality Control Report/ Daily Activity Log (DQCR) 01 45 00.3.10.1 & Specifications Appendix C	At 10-foot vertical intervals during backfilling, the active backfill surface shall be sounded to verify that the materials are reaching the base of the excavation.
2.13	Backfill	35 41 21, 3.2.3	CQC-L1, SQDC-L1, D-L1, ER-L1	D-L1, ER-L1		Daily Quality Control Report/ Daily Activity Log (DQCR) 01 45 00.3.10.1 & Specifications Appendix C	The volume of materials used to backfill each column shall be measured and recorded by the Contractor.
2.14	Retrieve Casing	35 41 21, 3.2.4	CQC-L1, SQDC-L1, D-L1, ER-L1	D-L1, ER-L1		Daily Quality Control Report/ Daily Activity Log (DQCR) 01 45 00.3.10.1 & Specifications Appendix C	At the conclusion of backfilling each Sand Relief Column, the casing shall be pulled from the excavation.
2.15	Sequence of Installation	35 41 21, 3.2.5	CQC-L1, SQDC-L1, D-L1, ER-L1	D-L1, ER-L1		Daily Quality Control Report/ Daily Activity Log (DQCR) 01 45 00.3.10.1 & Specifications Appendix C	The Contractor shall install Sand Relief Columns at every other location initially, then return to install the in between columns.
2.16	Limits of Work	35 41 21, 3.2.6	CQC-L1, SQDC-L1, D-L1, ER-L1	D-L1, ER-L1		Daily Quality Control Report/ Daily Activity Log (DQCR) 01 45 00.3.10.1 & Specifications Appendix C	Sand Relief Columns are to be installed at the locations shown on the Drawings, including along the centerline of the Intake Canal, and shall overlap at least 10 laterally with the previously placed Bid Package 3 contract sand relief columns.
2.17	Finished Sand Relief Columns	35 41 21, 3.2.7	CQC-L1, SQDC-L1, D-L1, ER-L1	D-L1, ER-L1		Daily Quality Control Report/ Daily Activity Log (DQCR) 01 45 00.3.10.1 & Specifications Appendix C	The area of the Sand Relief Columns shall be finished to match the grade of the bottom of the proposed Stone Rip Rap section.
2.18	Finished Sand Relief Columns	35 41 21, 3.2.7	CQC-L1, SQDC-L1, D-L1, ER-L1	D-L1, ER-L1		Daily Quality Control Report/ Daily Activity Log (DQCR) 01 45 00.3.10.1 & Specifications Appendix C	If fill is needed to reach the grade of the bottom of the Stone Rip Rap section, that fill shall be composed of Sand Relief Column Backfill materials.
2.19	Blanket Drain Outfall	35 41 21, 3.2.8	CQC-L1, SQDC-L1, D-L1, ER-L1	D-L1, ER-L1		Daily Quality Control Report/ Daily Activity Log (DQCR) 01 45 00.3.10.1 & Specifications Appendix C	The Contractor shall excavate for and place the filter sand, PVC Pipe, Blanket Drain, Outfall piping, aggregate stone and filter sand surrounding the drains, and the Stone Rip Rap in accordance with the details shown on the Drawings.
2.20	Area Southeast of S-476	35 41 21, 3.2.9	CQC-L1, SQDC-L1, D-L1, ER-L1	D-L1, ER-L1		Daily Quality Control Report/ Daily Activity Log (DQCR) 01 45 00.3.10.1 & Specifications Appendix C	For the portion of the pressure relief system located southeast of Pump Station S-476, the Contractor shall excavate to provide a working grade elevation of +15 feet, and install sand relief columns to the grades shown on the Drawings.
2.21	Area Southeast of S-476	35 41 21, 3.2.9	CQC-L1, SQDC-L1, D-L1, ER-L1	D-L1, ER-L1		Daily Quality Control Report/ Daily Activity Log (DQCR) 01 45 00.3.10.1 & Specifications Appendix C	The Contractor shall install two rows of steel sheet piling, and excavate between the sheeting to elevation -2 feet for the placement of drainage piping. Once the piping is installed, the excavation shall be backfilled with FDOT filter sand, all as indicated on the Drawings.

3	ACCEPTANCE						
3.1	Deficiencies & Non-Conformances of this DFOW	Quality Control 01 45 00	CQC-5, SDQC-5, D-5, ER-5, MCT-5	D-L5, ER-L4		Deficiency Logs and NCN Logs 01 45 00.3.10.1 & Appendix C	All deficiencies and non-conformances have been corrected of work in order to avoid covering deficiencies.
3.2	Final Follow-up Control Phase Inspection	01 45 00, 3.9.3	CQC-L5, D-L5, ER-L5,	D-L5, ER-L5	provide agenda > 48 hours prior to meeting	Final Follow-up Control Phase Inspection Checklist & Punch-Out 01 45 00.3.10.1 & Specifications Appendix C	Final Follow-up Control Phase Inspection checklist & punch out items have been completed.
3.3	AS-BUILT DETAILS OF INSTALLED PRESSURE RELIEF SYSTEMS	35 41 21, 3.3	CQC-L5, D-L5, ER-L5,	D-L5, ER-L5		Final Follow-up Control Phase Inspection Checklist & Punch-Out 01 45 00.3.10.1 & Specifications Appendix C	The Contractor shall be responsible for preparing and submitting signed and sealed as-built documents as specified.

(1): A HOLD POINT is a mandatory requirement - advance notification and acceptance (verbal/written) is required prior to continuing work.

(2): A NOTIFY POINT requires advance notification prior to performing the activity.

(3): The DISTRICT/PQACT inspection form / checklist is to be completed by the Contractor and member of the District/PQACT prior to the start of work. The inspection form/ checklist shall show no incompletions.

LEVEL 1 = CONTINUOUS INSPECTION OF ACTIVITIES, LEVEL 2 = MONITOR CRITICAL ACTIVITIES AND WITNESS TESTING, LEVEL 3 = RANDOM INSPECTION AND/OR AT COMPLETION OF WORK, LEVEL 4 = REVIEW OF PRECONSTRUCTION DOCUMENTATION, LEVEL 5 - REVIEW OF FINAL DOCUMENTS

CQC = CONTRACTOR QUALITY CONTROL SDQC = SPECIALIZED DISCIPLINE D = DISTRICT/PQACT ER = ENGINEER OF RECORD MCT = MANUFACTURER CERTIFICATION/TESTING

Approved By District/PQACT QA Manager: *D Roy Moseley* ***Date:*** *25July2018*

INSPECTION / TEST PLAN (ITP)
C-43 WEST BASIN STORAGE RESERVOIR
CONTRACT NUMBER: CN XXXXXXXXXX
CIVIL WORKS

Location: Hendry County, FL
Date Prepared:
Revision:
Contractor: **Prepared By:**

SOIL BENTONIE WALL
Spec. Section: 31 56 13.13

Item No.	Attribute / Activity Description	Acceptance Criteria (Codes, Std., Spec., Drawings, Etc.)	INSPECTION REQUIREMENTS			Forms / Records / References (3)	Comments
			Inspect	Hold (1)	Notify (2)		
1	PRE-CONSTRUCTION						
1.1	Contractor's Quality Control Plan, Site Health & Safety Plan and Permits	Quality Control 01 45 00, Safety Requirements 01 35 26, Permits & Fees 00 31 46	D-L4	D-L4		Plans and Permits	Plans have been submitted by Contractor and approved by the District/PQACT. All pemits have been obtained to begin work.
1.2	Preconstruction Submittals	Submittals 01 33 00 02 41 00	D-L4, ER-L4	D-L4, ER-L4		Transmittal 01 45 00.3.10.1. & Appen. C, Submittals 01 45 00.3.10.1. & Appen. C, Submittal Register	All preconstruction submittals for this DFOW shall be submitted by the Contractor and Approved by the District/PQACT.
1.3	Request For Information (RFIs)	Quality Control 01 45 00	D-L4, ER-L4	D-L4, ER-L4		Request for Information & Log 01 45 00.3.10.1 & Appen. C	All RFIs for this DFOW shall be answered in order to clear up any questions before work begins.
1.4	Work Plans	Quality Control 01 45 00	D-L4, ER-L4	D-L4, ER-L4		Plans	All work plans for this DFOW shall be submitted by the Contractor and approved by the District/PQACT.
1.5	Activity Hazard Analysis (AHA)	Safety Requirements 01 35 26	D-L4, ER-L4	D-L4, ER-L4		AHA 01 45 00.3.10.1 & Appen. C	The AHA for this DFOW have been submitted by the Contractor.
1.6	Previous Work Deficiencies & Non-Conformances of previous DFOW	Quality Control 01 45 00	CQC-L5, SDQC-L5, D-L5, ER-L5, MCT-L5	D-L4, ER-L4		Deficiency Logs and NCN Logs 01 45 00.3.10.1 & Appen. C	All deficiencies and non-conformances shall be corrected of previous work in order to avoid covering deficiencies.
1.7	Final Follow-up Control Phase Inspection of previous DFOW	Quality Control 01 45 00	CQC-L5, SDQC-L5, D-L5, ER-L5, MCT-L5	D-L4, ER-L4	48 Hours	Final Follow-up Control Phase Inspection Checklist & Punch-Out	Final Follow-up Control Phase Inspection checklist & punch out items shall be completed of previous work.
1.8	Preparatory Control Phase Inspection	Quality Control 01 45 00	CQC-L5, SDQC-L5, D-L5, ER-L5, MCT-L5	D-L4, ER-L4	48 Hours	Preparatory Control Phase Inspection Worksheet 01 45 00.3.10.1 & Appen. C	Preparatory Control Phase Inspection/Meeing shall be performed successfully without open issues.
2	CONSTRUCTION						
2.1	Initial Control Phase Inspection	01 45 00, 3.7.2	CQC-L5, SDQC-L5, D-L5, ER-L5,	D-L5, ER-L5	provide agenda > 48 hours prior to meeting	Initial Control Phase Inspection Checklist 01 45 00.3.10.1, & Specifications Appendix C	An Initial Control Phase Inspection shall be performed shortly after the DFOW has begun to determine if the DFOW plan is working and if the workmanship of the workers is satisfactory and meets safety standards.
2.2	Daily Follow-up Control Phase Inspections	01 45 00, 3.7.3	CQC-L1	N/A	N/A	Daily Quality Control Report/ Daily Activity Log (DQCR) 01 45 00.3.10.1 & Specifications Appendix C	Contractor to perform daily Follow-up Control Phase Inspections and document findings on DQCR.
2.3	CERTIFICATIONS AND QUALITY CONTROL TESTING - Bentonite	31 56 13.13, 1.6A	CQC-L1, SDQC-L1, D-L1, ER-L1,	D-L1, ER-L1		Daily Quality Control Report/ Daily Activity Log (DQCR) 01 45 00.3.10.1 & Specifications Appendix C	Each truckload of bentonite delivered to the site shall be sampled and tested in accordance with API Spec 13A.
2.4	CERTIFICATIONS AND QUALITY CONTROL TESTING - Bentonite	31 56 13.13, 1.6A	CQC-L1, SDQC-L1, D-L1, ER-L1,	D-L1, ER-L1		Daily Quality Control Report/ Daily Activity Log (DQCR) 01 45 00.3.10.1 & Specifications Appendix C	The Contractor shall provide manufacturer's certificates for each railroad car load of bentonite shipped and used for the project.
2.5	CERTIFICATIONS AND QUALITY CONTROL TESTING - Water	31 56 13.13, 1.6B	CQC-L1, SDQC-L1, D-L1, ER-L1,	D-L1, ER-L1		Daily Quality Control Report/ Daily Activity Log (DQCR) 01 45 00.3.10.1 & Specifications Appendix C	Water to be mixed with the bentonite shall be tested to confirm conformance with mix design water. Tests shall be repeated monthly or if there is an apparent change in water quality. Tests shall conform to the requirements of API RP 13B-1 and API RP 13B-2.
2.6	CERTIFICATIONS AND QUALITY CONTROL TESTING - Fresh Bentonite Slurry	31 56 13.1, 1.6C	CQC-L1, SDQC-L1, D-L1, ER-L1,	D-L1, ER-L1		Daily Quality Control Report/ Daily Activity Log (DQCR) 01 45 00.3.10.1 & Specifications Appendix C	Fresh bentonite slurry shall be sampled and tested from each pond, pit or tank prepared for use in the trench.
2.7	CERTIFICATIONS AND QUALITY CONTROL TESTING - Fresh Bentonite Slurry	31 56 13.13, 1.6C	CQC-L1, SDQC-L1, D-L1, ER-L1,	D-L1, ER-L1		Daily Quality Control Report/ Daily Activity Log (DQCR) 01 45 00.3.10.1 & Specifications Appendix C	Prior to use in the trench and at least twice per shift the slurry shall be tested for viscosity and density, and at least once per shift for pH and filtrate.

2.8	CERTIFICATIONS AND QUALITY CONTROL TESTING - Trench Bentonite Slurry	31 56 13.13, 1.6D	CQC-L1, SDQC-L1, D-L1, ER-L1,	D-L1, ER-L1		Daily Quality Control Report/ Daily Activity Log (DQCR) 01 45 00.3.10.1 & Specifications Appendix C	Trench bentonite slurry shall be sampled within five feet of the top of the trench and within five feet of the bottom of the trench from a zone within 20 feet of the toe of the soil- bentonite backfill slope at least twice per shift for each heading for viscosity, filtration, and density (sand content).
2.9	CERTIFICATIONS AND QUALITY CONTROL TESTING - Soundings	31 56 13.13, 1.6F	CQC-L1, SDQC-L1, D-L1, ER-L1,	D-L1, ER-L1		Daily Quality Control Report/ Daily Activity Log (DQCR) 01 45 00.3.10.1 & Specifications Appendix C	Excavation and soil-bentonite backfill soundings shall be made every 10 feet along the centerline of the excavation as specified in 31 56 13.13, 1.6F
2.10	CERTIFICATIONS AND QUALITY CONTROL TESTING - Backfill Slump	31 56 13.13, 1.6G	CQC-L1, SDQC-L1, D-L1, ER-L1,	D-L1, ER-L1		Daily Quality Control Report/ Daily Activity Log (DQCR) 01 45 00.3.10.1 & Specifications Appendix C	Slump of the SB backfill shall be tested at least twice per shift per heading in accordance with the publications listed in paragraph APPLICABLE PUBLICATIONS.
2.11	CERTIFICATIONS AND QUALITY CONTROL TESTING - Backfill Density	31 56 13.13, 1.6G	CQC-L1, SDQC-L1, D-L1, ER-L1,	D-L1, ER-L1		Daily Quality Control Report/ Daily Activity Log (DQCR) 01 45 00.3.10.1 & Specifications Appendix C	Density of the SB backfill shall be tested at least twice per shift per heading in accordance with the publications listed in paragraph APPLICABLE PUBLICATIONS.
2.12	CERTIFICATIONS AND QUALITY CONTROL TESTING - Backfill Fines Content	31 56 13.13, 1.6G	CQC-L1, SDQC-L1, D-L1, ER-L1,	D-L1, ER-L1		Daily Quality Control Report/ Daily Activity Log (DQCR) 01 45 00.3.10.1 & Specifications Appendix C	Fines content of the SB backfill shall be tested at least once per shift at each heading in accordance with the publications listed in paragraph APPLICABLE PUBLICATIONS.
2.13	EXCAVATION	31 56 13.13, 3.3	CQC-L1, SDQC-L1, D-L1, ER-L1,	D-L1, ER-L1		Daily Quality Control Report/ Daily Activity Log (DQCR) 01 45 00.3.10.1 & Specifications Appendix C	The Contractor shall perform excavation in accordance with the approved Plan.
2.14	TRENCH BACKFILLING	31 56 13.13, 3.4	CQC-L1, SDQC-L1, D-L1, ER-L1,	D-L1, ER-L1		Daily Quality Control Report/ Daily Activity Log (DQCR) 01 45 00.3.10.1 & Specifications Appendix C	The Contractor shall perform trench backfilling in accordance with the approved work plan.
3	**ACCEPTANCE**						
3.1	Deficiencies & Non-Conformances of this DFOW	Quality Control 01 45 00	CQC-5, SDQC-5, D-5, ER-5, MCT-5	D-L5, ER-L4		Deficiency Logs and NCN Logs 01 45 00.3.10.1 & Appendix C	All deficiencies and non-conformances have been corrected of work in order to avoid covering deficiencies.
3.2	Final Follow-up Control Phase Inspection	01 45 00, 3.9.3	CQC-L5, D-L5, ER-L5,	D-L5, ER-L5	provide agenda > 48 hours prior to meeting	Final Follow-up Control Phase Inspection Checklist & Punch-Out 01 45 00.3.10.1 & Specifications Appendix C	Final Follow-up Control Phase Inspection checklist & punch out items have been completed.

(1): A HOLD POINT is a mandatory requirement - advance notification and acceptance (verbal/written) is required prior to continuing work.

(2): A NOTIFY POINT requires advance notification prior to performing the activity.

(3): The DISTRICT/PQACT inspection form / checklist is to be completed by the Contractor and member of the District/PQACT prior to the start of work. The inspection form/ checklist shall show no incompletions.

LEVEL 1 = CONTINUOUS INSPECTION OF ACTIVITIES, LEVEL 2 = MONITOR CRITICAL ACTIVITIES AND WITNESS TESTING, LEVEL 3 = RANDOM INSPECTION AND/OR AT COMPLETION OF WORK, LEVEL 4 = REVIEW OF PRECONSTRUCTION DOCUMENTATION, LEVEL 5 - REVIEW OF FINAL DOCUMENTS

CQC = CONTRACTOR QUALITY CONTROL SDQC = SPECIALIZED DISCIPLINE D = DISTRICT/PQACT ER = ENGINEER OF RECORD MCT = MANUFACTURER CERTIFICATION/TESTING

Approved By District/PQACT QA Manager: *DRoy Moseley* ***Date:*** *25July2018*

INSPECTION / TEST PLAN (ITP)
C-43 WEST BASIN STORAGE RESERVOIR
CONTRACT NUMBER: CN XXXXXXXXXX
CIVIL WORKS

Location: Hendry County, FL
Date Prepared:
Revision:
Contractor: **Prepared By:**

SOIL CEMENT SLOPE PROTECTION
Spec. Section: 31 25 13

Item No.	Attribute / Activity Description	Acceptance Criteria (Codes, Std., Spec., Drawings, Etc.)	INSPECTION REQUIREMENTS			Forms / Records / References (3)	Comments
			Inspect	Hold (1)	Notify (2)		
1	PRE-CONSTRUCTION						
1.1	Contractor's Quality Control Plan, Site Health & Safety Plan and Permits	Quality Control 01 45 00, Safety Requirements 01 35 26, Permits & Fees 00 31 46	D-L4	D-L4		Plans and Permits	Plans have been submitted by Contractor and approved by the District/PQACT. All pemits have been obtained to begin work.
1.2	Preconstruction Submittals	Submittals 01 33 00 31 25 13	D-L4, ER-L4	D-L4, ER-L4		Transmittal 01 45 00.3.10.1. & Appen. C, Submittals 01 45 00.3.10.1. & Appen. C, Submittal Register	All preconstruction submittals for this DFOW shall be submitted by the Contractor and Approved by the District/PQACT.
1.3	Request For Information (RFIs)	Quality Control 01 45 00	D-L4, ER-L4	D-L4, ER-L4		Request for Information & Log 01 45 00.3.10.1 & Appen. C	All RFIs for this DFOW shall be answered in order to clear up any questions before work begins.
1.4	Work Plans	Quality Control 01 45 00	D-L4, ER-L4	D-L4, ER-L4		Plans	All work plans for this DFOW shall be submitted by the Contractor and approved by the District/PQACT.
1.5	Activity Hazard Analysis (AHA)	Safety Requirements 01 35 26	D-L4, ER-L4	D-L4, ER-L4		AHA 01 45 00.3.10.1 & Appen. C	The AHA for this DFOW have been submitted by the Contractor.
1.6	Previous Work Deficiencies & Non-Conformances of previous DFOW	Quality Control 01 45 00	CQC-L5, SDQC-L5, D-L5, ER-L5, MCT-L5	D-L4, ER-L4		Deficiency Logs and NCN Logs 01 45 00.3.10.1 & Appen. C	All deficiencies and non-conformances shall be corrected of previous work in order to avoid covering deficiencies.
1.7	Final Follow-up Control Phase Inspection of previous DFOW	Quality Control 01 45 00	CQC-L5, SDQC-L5, D-L5, ER-L5, MCT-L5	D-L4, ER-L4	48 Hours	Final Follow-up Control Phase Inspection Checklist & Punch-Out	Final Follow-up Control Phase Inspection checklist & punch out items shall be completed of previous work.
1.8	Preparatory Control Phase Inspection	Quality Control 01 45 00	CQC-L5, SDQC-L5, D-L5, ER-L5, MCT-L5	D-L4, ER-L4	48 Hours	Preparatory Control Phase Inspection Worksheet 01 45 00.3.10.1 & Appen. C	Preparatory Control Phase Inspection/Meeing shall be performed successfully without open issues.
2	CONSTRUCTION						
2.1	Initial Control Phase Inspection	01 45 00, 3.7.2	CQC-L5, SDQC-L5, D-L5, ER-L5,	D-L5, ER-L5	provide agenda > 48 hours prior to meeting	Initial Control Phase Inspection Checklist 01 45 00.3.10.1, & Specifications Appendix C	An Initial Control Phase Inspection shall be performed shortly after the DFOW has begun to determine if the DFOW plan is working and if the workmanship of the workers is satisfactory and meets safety standards.
2.2	Daily Follow-up Control Phase Inspections	01 45 00, 3.7.3	CQC-L1	N/A	N/A	Daily Quality Control Report/ Daily Activity Log (DQCR) 01 45 00.3.10.1 & Specifications Appendix C	Contractor to perform daily Follow-up Control Phase Inspections and document findings on DQCR.
2.3	ACCESS TO PLANT AND EQUIPMENT	31 25 13, 1.8	D-L1, ER-L1			Daily Quality Control Report/ Daily Activity Log (DQCR) 01 45 00.3.10.1 & Specifications Appendix C	The District shall have access at all times to all parts of the mixing plant(s) operations for checking adequacy of equipment in use; for inspecting operation of the plant; and for verifying weights, proportions and character of materials.
2.4	Aggregates - Source of Materials	31 25 13, 2.1.3.1a	D-L1, ER-L1			Daily Quality Control Report/ Daily Activity Log (DQCR) 01 45 00.3.10.1 & Specifications Appendix C	District shall sample stockpiled material to confirm material is suitable.
2.5	Soil-Cement Gradation	31 25 13, 2.1.3.2a	CQC-L1, SDQC-L1, D-L1, ER-L1	D-L1, ER-L1		Daily Quality Control Report/ Daily Activity Log (DQCR) 01 45 00.3.10.1 & Specifications Appendix C	Soil aggregate for use in soil-cement construction, when tested in accordance with ASTM D422, shall conform to the gradation indicated in the table and shall be free of any deleterious materials.
2.6	Soil aggregate for soil-cement	31 25 13, 2.1.3.2b	CQC-L1, SDQC-L1, D-L1, ER-L1	D-L1, ER-L1		Daily Quality Control Report/ Daily Activity Log (DQCR) 01 45 00.3.10.1 & Specifications Appendix C	Soil aggregate for soil-cement shall not contain clay/silt lumps, and have a maximum organic content of 1 percent.

2.7	MIX DESIGN PROCEDURE	31 25 13, 3.1	CQC-L1, SDQC-L1, D-L1, ER-L1	D-L1, ER-L1		Daily Quality Control Report/ Daily Activity Log (DQCR) 01 45 00.3.10.1 & Specifications Appendix C	See section for mix design procedures
2.8	Inspection and Tests	31 25 13, 3.15.1	CQC-L1, SDQC-L1, D-L1, ER-L1	D-L1, ER-L1		Daily Quality Control Report/ Daily Activity Log (DQCR) 01 45 00.3.10.1 & Specifications Appendix C	The Contractor shall be responsible for all quality control (QC), inspections and testing associated with the work. Based upon the results of the QC inspections and tests, the Contractor shall take actions necessary to correct any items that are not in compliance with these specifications.
2.9	Inspection and Tests	31 25 13, 3.15.2	CQC-L1, SDQC-L1, D-L1, ER-L1	D-L1, ER-L1		Daily Quality Control Report/ Daily Activity Log (DQCR) 01 45 00.3.10.1 & Specifications Appendix C	The District with assistance and cooperation from the Contractor will perform independent quality assurance (QA) inspection and testing.
2.10	Inspection Details and Frequency of Testing - Calibration of Mixing Plant(s)	31 25 13, 3.15.2	CQC-L1, SDQC-L1, D-L1, ER-L1	D-L1, ER-L1		Daily Quality Control Report/ Daily Activity Log (DQCR) 01 45 00.3.10.1 & Specifications Appendix C	Whenever it is found that either the weighing or the batching accuracy does not comply with specification requirements, the plant shall be shut down until necessary adjustments or repairs have been made. Discrepancies in recording shall be corrected immediately.
2.11	Inspection Details and Frequency of Testing - Continuous-Mixing Plants	31 25 13, 3.15.2	CQC-L1, SDQC-L1, D-L1, ER-L1	D-L1, ER-L1		Daily Quality Control Report/ Daily Activity Log (DQCR) 01 45 00.3.10.1 & Specifications Appendix C	Accuracy of proportioning of the continuousmixing plant shall be checked by the Contractor in the presence of the District for the cementitious material every 2 shifts, and for each aggregate at the beginning of construction and after every 5 shifts. The accuracy of proportioning shall be checked by simultaneously securing timed samples of the cementitious materials and the aggregate as they are fed to the mixer and weighing each as appropriate.
2.12	Inspection Details and Frequency of Testing - Preparation for Placing	31 25 13, 3.15.2	CQC-L1, SDQC-L1, D-L1, ER-L1	D-L1, ER-L1		Daily Quality Control Report/ Daily Activity Log (DQCR) 01 45 00.3.10.1 & Specifications Appendix C	The District will inspect construction joints prior to each lift of soil-cement placement. The Contractor shall obtain approval from the District prior to placing soil-cement at the start of each shift and at previously placed joints.
2.13	Inspection Details and Frequency of Testing - Inspection During Placing	31 25 13, 3.15.2	CQC-L1, SDQC-L1, D-L1, ER-L1	D-L1, ER-L1		Daily Quality Control Report/ Daily Activity Log (DQCR) 01 45 00.3.10.1 & Specifications Appendix C	The Contractor shall be responsible for measuring and recording soil-cement temperature, ambient temperature, weather conditions, time of placement, and method and location of placement.
2.14	Field Density Testing - Calibration Blocks	31 25 13, 3.15.2	CQC-L1, SDQC-L1, D-L1, ER-L1	D-L1, ER-L1		Daily Quality Control Report/ Daily Activity Log (DQCR) 01 45 00.3.10.1 & Specifications Appendix C	Three calibration blocks for the Nuclear Density Gauge shall be fabricated by the Contractor with soil-cement materials and proportions representative of those to be used during construction. The blocks shall be used each day before placement begins to calibrate the full depth readings of the nuclear density gauges used by the Contractor. See 31 25 13, 3.15.2 Field Density Testing a.
2.15	Field Density Testing - Calibration Blocks	31 25 13, 3.15.2	CQC-L1, SDQC-L1, D-L1, ER-L1	D-L1, ER-L1		Daily Quality Control Report/ Daily Activity Log (DQCR) 01 45 00.3.10.1 & Specifications Appendix C	The blocks shall be compacted to at least 98 percent of the maximum dry density, which will be determined by the Contractor in accordance with ASTM D558. See 31 25 13, 3.15.2 Field Density Testing b.
2.16	Field Density Testing - Field Density and Moisture Testing	31 25 13, 3.15.2	CQC-L1, SDQC-L1, D-L1, ER-L1	D-L1, ER-L1		Daily Quality Control Report/ Daily Activity Log (DQCR) 01 45 00.3.10.1 & Specifications Appendix C	Field Density and Moisture Testing: Field density test shall be performed by the Contractor on the soil-cement in accordance with ASTM D2937 or D6938 as soon as possible, but within 30 minutes, after the completion of vibratory rolling. See 31 25 13, 3.15.2 Field Density Testing c.
2.17	Field Density Testing - Frequency of Field Density and Moisture Testing	31 25 13, 3.15.2	CQC-L1, SDQC-L1, D-L1, ER-L1	D-L1, ER-L1		Daily Quality Control Report/ Daily Activity Log (DQCR) 01 45 00.3.10.1 & Specifications Appendix C	Field density tests shall be performed at a frequency of one test per 50 cubic yards of soil-cement placed.
2.18	Field Density Testing - Frequency of Field Density and Moisture Testing- other	31 25 13, 3.15.2	CQC-L1, SDQC-L1, D-L1, ER-L1	D-L1, ER-L1		Daily Quality Control Report/ Daily Activity Log (DQCR) 01 45 00.3.10.1 & Specifications Appendix C	Frequency of other QC related testing shall be as follows: i. Aggregate Gradation Testing - Daily ii. Heat of Neutralization of Soil-Cement - Daily iii. Moisture Content of Aggregate - Daily

3	ACCEPTANCE						
3.1	Final Follow-up Control Phase Inspection	01 45 00, 3.9.3	CQC-L5, D-L5, ER-L5,	D-L5, ER-L5	provide agenda > 48 hours prior to	Final Follow-up Control Phase Inspection Checklist & Punch-Out 01 45 00.3.10.1 &	Final Follow-up Control Phase Inspection checklist & punch out items have been completed.

(1): A HOLD POINT is a mandatory requirement - advance notification and acceptance (verbal/written) is required prior to continuing work.

(2): A NOTIFY POINT requires advance notification prior to performing the activity.

(3): The DISTRICT/PQACT inspection form / checklist is to be completed by the Contractor and member of the District/PQACT prior to the start of work. The inspection form/ checklist shall show no incompletions.

LEVEL 1 = CONTINUOUS INSPECTION OF ACTIVITIES, LEVEL 2 = MONITOR CRITICAL ACTIVITIES AND WITNESS TESTING, LEVEL 3 = RANDOM INSPECTION AND/OR AT COMPLETION OF WORK, LEVEL 4 = REVIEW OF PRECONSTRUCTION DOCUMENTATION, LEVEL 5 - REVIEW OF FINAL DOCUMENTS

CQC = CONTRACTOR QUALITY CONTROL SDQC = SPECIALIZED DISCIPLINE D = DISTRICT/PQACT ER = ENGINEER OF RECORD MCT = MANUFACTURER CERTIFICATION/TESTING

Approved By District/PQACT QA Manager: *DRoy Moseley* ***Date:*** *26July2018*

INSPECTION / TEST PLAN (ITP)
C-43 WEST BASIN STORAGE RESERVOIR
CONTRACT NUMBER: CN XXXXXXXXXX

CIVIL WORKS

Location: Hendry County, FL

Date Prepared:

Revision:

Contractor: **Prepared By:**

BLANKET DRAINS, CHIMNEY DRAINS, TOE DRAINS & SLOPE PROTECTION UNDERDRAINS
Spec. Section: 33 46 13

Item No.	Attribute / Activity Description	Acceptance Criteria (Codes, Std., Spec., Drawings, Etc.)	INSPECTION REQUIREMENTS			Forms / Records / References (3)	Comments
			Inspect	Hold (1)	Notify (2)		
1	PRE-CONSTRUCTION						
1.1	Contractor's Quality Control Plan, Site Health & Safety Plan and Permits	Quality Control 01 45 00, Safety Requirements 01 35 26, Permits & Fees 00 31 46	D-L4	D-L4		Plans and Permits	Plans have been submitted by Contractor and approved by the District/PQACT. All pemits have been obtained to begin work.
1.2	Preconstruction Submittals	Submittals 01 33 00 33 46 13	D-L4, ER-L4	D-L4, ER-L4		Transmittal 01 45 00.3.10.1. & Appen. C, Submittals 01 45 00.3.10.1. & Appen. C, Submittal Register	All preconstruction submittals for this DFOW shall be submitted by the Contractor and Approved by the District/PQACT.
1.3	Request For Information (RFIs)	Quality Control 01 45 00	D-L4, ER-L4	D-L4, ER-L4		Request for Information & Log 01 45 00.3.10.1 & Appen. C	All RFIs for this DFOW shall be answered in order to clear up any questions before work begins.
1.4	Work Plans	Quality Control 01 45 00	D-L4, ER-L4	D-L4, ER-L4		Plans	All work plans for this DFOW shall be submitted by the Contractor and approved by the District/PQACT.
1.5	Activity Hazard Analysis (AHA)	Safety Requirements 01 35 26	D-L4, ER-L4	D-L4, ER-L4		AHA 01 45 00.3.10.1 & Appen. C	The AHA for this DFOW have been submitted by the Contractor.
1.6	Previous Work Deficiencies & Non-Conformances of previous DFOW	Quality Control 01 45 00	CQC-L5, SDQC-L5, D-L5, ER-L5, MCT-L5	D-L4, ER-L4		Deficiency Logs and NCN Logs 01 45 00.3.10.1 & Appen. C	All deficiencies and non-conformances shall be corrected of previous work in order to avoid covering deficiencies.
1.7	Final Follow-up Control Phase Inspection of previous DFOW	Quality Control 01 45 00	CQC-L5, SDQC-L5, D-L5, ER-L5, MCT-L5	D-L4, ER-L4	48 Hours	Final Follow-up Control Phase Inspection Checklist & Punch-Out	Final Follow-up Control Phase Inspection checklist & punch out items shall be completed of previous work.
1.8	Preparatory Control Phase Inspection	Quality Control 01 45 00	CQC-L5, SDQC-L5, D-L5, ER-L5, MCT-L5	D-L4, ER-L4	48 Hours	Preparatory Control Phase Inspection Worksheet 01 45 00.3.10.1 & Appen. C	Preparatory Control Phase Inspection/Meeing shall be performed successfully without open issues.
2	CONSTRUCTION						
2.1	Initial Control Phase Inspection	01 45 00, 3.7.2	CQC-L5, SDQC-L5, D-L5, ER-L5,	D-L5, ER-L5	provide agenda > 48 hours prior to meeting	Initial Control Phase Inspection Checklist 01 45 00.3.10.1, & Specifications Appendix C	An Initial Control Phase Inspection shall be performed shortly after the DFOW has begun to determine if the DFOW plan is working and if the workmanship of the workers is satisfactory and meets safety standards.
2.2	Daily Follow-up Control Phase Inspections	01 45 00, 3.7.3	CQC-L1	N/A	N/A	Daily Quality Control Report/ Daily Activity Log (DQCR) 01 45 00.3.10.1 & Specifications Appendix C	Contractor to perform daily Follow-up Control Phase Inspections and document findings on DQCR.
2.3	QUALITY CONTROL INSPECTION AND TESTING	33 46 13, 3.4	CQC-L1, SDQC-L1, D-L1, ER-L1,	D-L1, ER-L1		Daily Quality Control Report/ Daily Activity Log (DQCR) 01 45 00.3.10.1 & Specifications Appendix C	The District will regularly inspect the pipe and fittings diameter, and filter materials for compliance with applicable ASTM standards, slot width and spacing, quality of workmanship of the slots, and composition of the filter materials.
2.4	QUALITY CONTROL INSPECTION AND TESTING	33 46 13, 3.4	CQC-L1, SDQC-L1, D-L1, ER-L1,	D-L1, ER-L1		Daily Quality Control Report/ Daily Activity Log (DQCR) 01 45 00.3.10.1 & Specifications Appendix C	The DISTRICT will observe the installation of the pipe, joints and fittings for compliance with this specification.
2.5	QUALITY CONTROL INSPECTION AND TESTING	33 46 13, 3.4	CQC-L1, SDQC-L1, D-L1, ER-L1,	D-L1, ER-L1		Daily Quality Control Report/ Daily Activity Log (DQCR) 01 45 00.3.10.1 & Specifications Appendix C	The Contractor shall sample and test gradation of filter materials at a frequency that provides at least one gradation per week per material type per installation crew.

3	ACCEPTANCE						
3.1	Deficiencies & Non-Conformances of this DFOW	Quality Control 01 45 00	CQC-5, SDQC-5, D-5, ER-5, MCT-5	D-L5, ER-L4		Deficiency Logs and NCN Logs 01 45 00.3.10.1 & Appendix C	All deficiencies and non-conformances have been corrected of work in order to avoid covering deficiencies.
3.2	Final Follow-up Control Phase Inspection	01 45 00, 3.9.3	CQC-L5, D-L5, ER-L5,	D-L5, ER-L5	provide agenda > 48 hours prior to meeting	Final Follow-up Control Phase Inspection Checklist & Punch-Out 01 45 00.3.10.1 & Specifications Appendix C	Final Follow-up Control Phase Inspection checklist & punch out items have been completed.

(1): A HOLD POINT is a mandatory requirement - advance notification and acceptance (verbal/written) is required prior to continuing work.

(2): A NOTIFY POINT requires advance notification prior to performing the activity.

(3): The DISTRICT/PQACT inspection form / checklist is to be completed by the Contractor and member of the District/PQACT prior to the start of work. The inspection form/ checklist shall show no incompletions.

LEVEL 1 = CONTINUOUS INSPECTION OF ACTIVITIES, LEVEL 2 = MONITOR CRITICAL ACTIVITIES AND WITNESS TESTING, LEVEL 3 = RANDOM INSPECTION AND/OR AT COMPLETION OF WORK, LEVEL 4 = REVIEW OF PRECONSTRUCTION DOCUMENTATION, LEVEL 5 - REVIEW OF FINAL DOCUMENTS

CQC = CONTRACTOR QUALITY CONTROL SDQC = SPECIALIZED DISCIPLINE D = DISTRICT/PQACT ER = ENGINEER OF RECORD MCT = MANUFACTURER CERTIFICATION/TESTING

Approved By District/PQACT QA Manager: *DRoy Moseley* ***Date:*** *26July2018*

INSPECTION / TEST PLAN (ITP)
C-43 WEST BASIN STORAGE RESERVOIR
CONTRACT NUMBER: CN XXXXXXXXXX

CIVIL WORKS

Location: Hendry County, FL

Date Prepared:

Revision:

Contractor: **Prepared By:**

PERMANENT GEOTECHNICAL INSTRUMENTATION
Spec. Section: 31 09 00

Item No.	Attribute / Activity Description	Acceptance Criteria (Codes, Std., Spec., Drawings, Etc.)	INSPECTION REQUIREMENTS			Forms / Records / References (3)	Comments
			Inspect	Hold (1)	Notify (2)		
1	PRE-CONSTRUCTION						
1.1	Contractor's Quality Control Plan, Site Health & Safety Plan and Permits	Quality Control 01 45 00, Safety Requirements 01 35 26, Permits & Fees 00 31 46	D-L4	D-L4		Plans and Permits	Plans have been submitted by Contractor and approved by the District/PQACT. All pemits have been obtained to begin work.
1.2	Preconstruction Submittals	Submittals 01 33 00 31 09 00	D-L4, ER-L4	D-L4, ER-L4		Transmittal 01 45 00.3.10.1. & Appen. C, Submittals 01 45 00.3.10.1. & Appen. C, Submittal Register	All preconstruction submittals for this DFOW shall be submitted by the Contractor and Approved by the District/PQACT.
1.3	Request For Information (RFIs)	Quality Control 01 45 00	D-L4, ER-L4	D-L4, ER-L4		Request for Information & Log 01 45 00.3.10.1 & Appen. C	All RFIs for this DFOW shall be answered in order to clear up any questions before work begins.
1.4	Work Plans	Quality Control 01 45 00	D-L4, ER-L4	D-L4, ER-L4		Plans	All work plans for this DFOW shall be submitted by the Contractor and approved by the District/PQACT.
1.5	Activity Hazard Analysis (AHA)	Safety Requirements 01 35 26	D-L4, ER-L4	D-L4, ER-L4		AHA 01 45 00.3.10.1 & Appen. C	The AHA for this DFOW have been submitted by the Contractor.
1.6	Previous Work Deficiencies & Non-Conformances of previous DFOW	Quality Control 01 45 00	CQC-L5, SDQC-L5, D-L5, ER-L5, MCT-L5	D-L4, ER-L4		Deficiency Logs and NCN Logs 01 45 00.3.10.1 & Appen. C	All deficiencies and non-conformances shall be corrected of previous work in order to avoid covering deficiencies.
1.7	Final Follow-up Control Phase Inspection of previous DFOW	Quality Control 01 45 00	CQC-L5, SDQC-L5, D-L5, ER-L5, MCT-L5	D-L4, ER-L4	48 Hours	Final Follow-up Control Phase Inspection Checklist & Punch-Out	Final Follow-up Control Phase Inspection checklist & punch out items shall be completed of previous work.
1.8	Preparatory Control Phase Inspection	Quality Control 01 45 00	CQC-L5, SDQC-L5, D-L5, ER-L5, MCT-L5	D-L4, ER-L4	48 Hours	Preparatory Control Phase Inspection Worksheet 01 45 00.3.10.1 & Appen. C	Preparatory Control Phase Inspection/Meeing shall be performed successfully without open issues.
2	CONSTRUCTION						
2.1	Initial Control Phase Inspection	01 45 00, 3.7.2	CQC-L5, SDQC-L5, D-L5, ER-L5,	D-L5, ER-L5	provide agenda > 48 hours prior to meeting	Initial Control Phase Inspection Checklist 01 45 00.3.10.1, & Specifications Appendix C	An Initial Control Phase Inspection shall be performed shortly after the DFOW has begun to determine if the DFOW plan is working and if the workmanship of the workers is satisfactory and meets safety standards.
2.2	Daily Follow-up Control Phase Inspections	01 45 00, 3.7.3	CQC-L1	N/A	N/A	Daily Quality Control Report/ Daily Activity Log (DQCR) 01 45 00.3.10.1 & Specifications Appendix C	Contractor to perform daily Follow-up Control Phase Inspections and document findings on DQCR.
2.3	Piezometer Installation	31 09 00, 3.1	CQC-1, SDQC-1, D-1, ER-1	D-L1, ER-L1	N/A	Daily Quality Control Report/ Daily Activity Log (DQCR) 01 45 00.3.10.1 & Specifications Appendix C	Installation shall be performed as specified in 31 09 00, 3.1
2.4	Settlement Plates	31 09 00, 3.3	CQC-1, SDQC-1, D-1, ER-1	D-L1, ER-L1	N/A	Daily Quality Control Report/ Daily Activity Log (DQCR) 01 45 00.3.10.1 & Specifications Appendix C	Settlement Plates shall adhere to 31 09 00, 3.3.
2.6	Permanent Piezometer	31 09 00,3.4	CQC-1, SDQC-1, D-1, ER-1	D-L1, ER-L1	N/A	Daily Quality Control Report/ Daily Activity Log (DQCR) 01 45 00.3.10.1 & Specifications Appendix C	Permanent Piezometers shall adhere to 31 09 00, 3.4.

3	ACCEPTANCE						
3.1	Deficiencies & Non-Conformances of this DFOW	Quality Control 01 45 00	CQC-5, SDQC-5, D-5, ER-5	D-L5, ER-L4		Deficiency Logs and NCN Logs 01 45 00.3.10.1 & Appendix C	All deficiencies and non-conformances have been corrected of work in order to avoid covering deficiencies.
3.2	Final Follow-up Control Phase Inspection	01 45 00, 3.9.3	CQC-L5, D-L5, ER-L5,	D-L5, ER-L5	provide agenda > 48 hours prior to meeting	Final Follow-up Control Phase Inspection Checklist & Punch-Out 01 45 00.3.10.1 & Specifications Appendix C	Final Follow-up Control Phase Inspection checklist & punch out items have been completed.
3.3	Survey Monuments	31 09 00, 3.5	CQC-1, SDQC-1, D-1, ER-1	D-L1, ER-L1		Final Follow-up Control Phase Inspection Checklist & Punch-Out 01 45 00.3.10.1 & Specifications Appendix C	Contractor shall install Survey Monuments in accordance with the details shown and at the locations shown on the Drawings.
3.4	Warranty	31 09 00, 1.9	CQC-L5, D-L5, ER-L5,	D-L5, ER-L5		Final Follow-up Control Phase Inspection Checklist & Punch-Out 01 45 00.3.10.1 & Specifications Appendix C	Vibrating Wire Piezometers, cables, and Data Loggers shall be warrantied for not less than years.

(1): A HOLD POINT is a mandatory requirement - advance notification and acceptance (verbal/written) is required prior to continuing work.

(2): A NOTIFY POINT requires advance notification prior to performing the activity.

(3): The DISTRICT/PQACT inspection form / checklist is to be completed by the Contractor and member of the District/PQACT prior to the start of work. The inspection form/ checklist shall show no incompletions.

LEVEL 1 = CONTINUOUS INSPECTION OF ACTIVITIES, LEVEL 2 = MONITOR CRITICAL ACTIVITIES AND WITNESS TESTING, LEVEL 3 = RANDOM INSPECTION AND/OR AT COMPLETION OF WORK, LEVEL 4 = REVIEW OF PRECONSTRUCTION DOCUMENTATION, LEVEL 5 - REVIEW OF FINAL DOCUMENTS

CQC = CONTRACTOR QUALITY CONTROL SDQC = SPECIALIZED DISCIPLINE D = DISTRICT/PQACT ER = ENGINEER OF RECORD MCT = MANUFACTURER CERTIFICATION/TESTING

Approved By District/PQACT QA Manager: *D Roy Moseley* ***Date:*** *25July2018*

INSPECTION / TEST PLAN (ITP)
C-43 WEST BASIN STORAGE RESERVOIR
CONTRACT NUMBER: CN XXXXXXXXXX
CIVIL WORKS

Location: Hendry County, FL
Date Prepared:
Revision:
Contractor: **Prepared By:**

GRASSING
Spec. Section: 32 92 19, 35 42 34

Item No.		Acceptance Criteria (Codes, Std., Spec., Drawings, Etc.)	INSPECTION REQUIREMENTS			Forms / Records / References (3)	Comments
			Inspect	Hold (1)	Notify (2)		
1	PRE-CONSTRUCTION						
1.1	Contractor's Quality Control Plan, Site Health & Safety Plan and Permits	Quality Control 01 45 00, Safety Requirements 01 35 26, Permits & Fees 00 31 46	D-L4	D-L4		Plans and Permits	Plans have been submitted by Contractor and approved by the District/PQACT. All pemits have been obtained to begin work.
1.2	Preconstruction Submittals	Submittals 01 33 00 32 92 19, 35 42 34	D-L4, ER-L4	D-L4, ER-L4		Transmittal 01 45 00.3.10.1. & Appen. C, Submittals 01 45 00.3.10.1. & Appen. C, Submittal Register	All preconstruction submittals for this DFOW shall be submitted by the Contractor and Approved by the District/PQACT.
1.3	Request For Information (RFIs)	Quality Control 01 45 00	D-L4, ER-L4	D-L4, ER-L4		Request for Information & Log 01 45 00.3.10.1 & Appen. C	All RFIs for this DFOW shall be answered in order to clear up any questions before work begins.
1.4	Work Plans	Quality Control 01 45 00	D-L4, ER-L4	D-L4, ER-L4		Plans	All work plans for this DFOW shall be submitted by the Contractor and approved by the District/PQACT.
1.5	Activity Hazard Analysis (AHA)	Safety Requirements 01 35 26	D-L4, ER-L4	D-L4, ER-L4		AHA 01 45 00.3.10.1 & Appen. C	The AHA for this DFOW have been submitted by the Contractor.
1.6	Previous Work Deficiencies & Non-Conformances of previous DFOW	Quality Control 01 45 00	CQC-L5, SDQC-L5, D-L5, ER-L5, MCT-L5	D-L4, ER-L4		Deficiency Logs and NCN Logs 01 45 00.3.10.1 & Appen. C	All deficiencies and non-conformances shall be corrected of previous work in order to avoid covering deficiencies.
1.7	Final Follow-up Control Phase Inspection of previous DFOW	Quality Control 01 45 00	CQC-L5, SDQC-L5, D-L5, ER-L5, MCT-L5	D-L4, ER-L4	48 Hours	Final Follow-up Control Phase Inspection Checklist & Punch-Out	Final Follow-up Control Phase Inspection checklist & punch out items shall be completed of previous work.
1.8	Preparatory Control Phase Inspection	Quality Control 01 45 00	CQC-L5, SDQC-L5, D-L5, ER-L5, MCT-L5	D-L4, ER-L4	48 Hours	Preparatory Control Phase Inspection Worksheet 01 45 00.3.10.1 & Appen. C	Preparatory Control Phase Inspection/Meeing shall be performed successfully without open issues.
2	CONSTRUCTION						
2.1	Initial Control Phase Inspection	01 45 00	CQC-L5, SDQC-L5, D-L5, ER-L5	D-L4, ER-L4	provide agenda > 48 Hours prior to	Initial Control Phase Inspection Agenda 01 45 00.1.10.1.13, Initial Control Phase Inspection	An Initial Control Phase Inspection shall be performed shortly after the DFOW has begun to determine if the
2.2	Daily Follow-up Control Phase Inspections	01 45 00	CQC-L1			Daily Quality Control Report/ Daily Activity Log (DQCR) 01 45 00.3.10.1 & Appen. C	Contractor to perform daily Follow-up Control Phase Inspections and document findings on DQCR.
2.3	District Inspections - final grading of the slopes	35 42 34, 1.6.4	CQC-L1, SDQC-L1, D-L1, ER-L1	D-L1, ER-L1		Daily Quality Control Report/ Daily Activity Log (DQCR) 01 45 00.3.10.1 & Appen. C	The District shall inspect the final grading of the slopes for which the Contractor proposes to install geotextiles and HPTRM to confirm that it meets the requirements of Section 3.1.
2.4	District Inspections - final grading of the slopes	35 42 34, 3.1	CQC-L1, SDQC-L1, D-L1, ER-L1	D-L1, ER-L1		Daily Quality Control Report/ Daily Activity Log (DQCR) 01 45 00.3.10.1 & Appen. C	The Contractor shall grade the surface on which the Geotextile and HPTRM is to be placed to the neat lines and grades as shown on the drawings. The surface shall be smooth and free of loose rocks, clods, holes, depressions, projections, muddy conditions, and standing or flowing water. Any irregularities shall be removed to insure continuous, intimate contact of the geotextile with the surface.
2.5	District Inspections - top anchor trench	35 42 34, 1.6.4	CQC-L1, SDQC-L1, D-L1, ER-L1	D-L1, ER-L1		Daily Quality Control Report/ Daily Activity Log (DQCR) 01 45 00.3.10.1 & Appen. C	The District shall inspect the top anchor trench to ensure that the proper geometry is achieved and that pins are provided at the design interval per Section 2.3 prior to backfilling the top anchor trench.

2.6	District Inspections - Pull out tests	35 42 34, 1.6.4	CQC-L1, SDQC-L1, D-L1, ER-L1	D-L1, ER-L1		Daily Quality Control Report/ Daily Activity Log (DQCR) 01 45 00.3.10.1 & Appen. C	The District shall conduct random pull out tests of the earth percussion anchors. The earth percussion anchors shall have a pullout resistance of 150 lbs and shall be tested at random locations identified by the District in accordance with ASTM D4435.
2.7	District Inspections - Pull out tests	35 42 34, 1.6.4	CQC-L1, SDQC-L1, D-L1, ER-L1	D-L1, ER-L1		Daily Quality Control Report/ Daily Activity Log (DQCR) 01 45 00.3.10.1 & Appen. C	The Contractor shall replace all failed percussion anchors at no additional cost to the District. Replacement anchors shall be installed to a depth sufficient to meet minimum required pullout resistance.
2.8	District Inspections - Surface irregularities or damage	35 42 34, 1.6.4	CQC-L1, SDQC-L1, D-L1, ER-L1	D-L1, ER-L1		Daily Quality Control Report/ Daily Activity Log (DQCR) 01 45 00.3.10.1 & Appen. C	Prior to the installation of grassing on the HPTRM, the District shall inspect that there are no surface irregularities or damage that could present a potential failure in the system.
2.9	District Inspections - Surface irregularities or damage	35 42 34, 1.6.4	CQC-L1, SDQC-L1, D-L1, ER-L1	D-L1, ER-L1		Daily Quality Control Report/ Daily Activity Log (DQCR) 01 45 00.3.10.1 & Appen. C	Prior to the installation of grassing on the HPTRM, the District shall inspect that all pins and earth percussion anchors are installed per Section 3.2.
2.10	District Inspections - Surface irregularities or damage	35 42 34, 1.6.4	CQC-L1, SDQC-L1, D-L1, ER-L1	D-L1, ER-L1		Daily Quality Control Report/ Daily Activity Log (DQCR) 01 45 00.3.10.1 & Appen. C	Prior to the installation of grassing on the HPTRM, the District shall inspect that all excess tendons from installed earth percussion anchors are removed.
2.11	Anchor Load Tests	35 42 34, 1.6.4	CQC-L1, SDQC-L1, D-L1, ER-L1	D-L1, ER-L1		Daily Quality Control Report/ Daily Activity Log (DQCR) 01 45 00.3.10.1 & Appen. C	At each wave wall opening where the HPTRM is installed from the crest of the dam to the toe of the dam perform a minimum of 4 pullout tests (approximately 1 per 400 sf).
2.12	Anchor Load Tests	35 42 34, 1.6.4	CQC-L1, SDQC-L1, D-L1, ER-L1	D-L1, ER-L1		Daily Quality Control Report/ Daily Activity Log (DQCR) 01 45 00.3.10.1 & Appen. C	At wave wall openings where the HPTRM does not reach the toe of the dam perform a minimum of 21 pullout tests per 400 sf.
2.13	Amend Topsoil	32 92 19, 3.1.1.1	CQC-L1, SDQC-L1, D-L1, ER-L1	D-L1, ER-L1		Daily Quality Control Report/ Daily Activity Log (DQCR) 01 45 00.3.10.1 & Appen. C	Thoroughly blend the compost with the stockpiled topsoil from the earthwork operations according to 3.1.1.1 table.
2.14	Placing Amended Topsoil	32 92 19, 3.1.1.2	CQC-L1, SDQC-L1, D-L1, ER-L1	D-L1, ER-L1		Daily Quality Control Report/ Daily Activity Log (DQCR) 01 45 00.3.10.1 & Appen. C	Provide 6 inches amended topsoil to meet indicated finish grade. After areas have been brought to indicated finish grade, incorporate fertilizer into soil a minimum depth of 4 inches by disking, harrowing, tilling or other method approved by the District.
2.15	Placing Amended Topsoil	32 92 19, 3.1.1.2	CQC-L1, SDQC-L1, D-L1, ER-L1	D-L1, ER-L1		Daily Quality Control Report/ Daily Activity Log (DQCR) 01 45 00.3.10.1 & Appen. C	Remove debris and stones larger than 3/4 inch in any dimension remaining on the surface after finish grading.
2.16	Fertilizer Application Rates	32 92 19, 3.1.1.3	CQC-L1, SDQC-L1, D-L1, ER-L1	D-L1, ER-L1		Daily Quality Control Report/ Daily Activity Log (DQCR) 01 45 00.3.10.1 & Appen. C	Apply fertilizer in accordance with the Manufacturer's recommendations. Incorporate fertilizer into the soil to a depth of at least two (2) inches by disking, harrowing or raking, except on slopes steeper than two (2) horizontal to one (1) vertical.
2.17	Broadcast and Drop Seeding	32 92 19, 3.2.2.1	CQC-L1, SDQC-L1, D-L1, ER-L1	D-L1, ER-L1		Daily Quality Control Report/ Daily Activity Log (DQCR) 01 45 00.3.10.1 & Appen. C	Seed mix shall be uniformly broadcast at the rate of not less than 45 pounds per acre. Use broadcast or drop seeders. Sow one-half the seed in one direction, and sow remainder at right angles to the first sowing.
2.18	Broadcast and Drop Seeding	32 92 19, 3.2.2.1	CQC-L1, SDQC-L1, D-L1, ER-L1	D-L1, ER-L1		Daily Quality Control Report/ Daily Activity Log (DQCR) 01 45 00.3.10.1 & Appen. C	Cover seed uniformly to a maximum depth of 1/4 inch in clay soils and 1/2 inch in sandy soils by means of spike-tooth harrow, cultipacker, raking or other approved devices.
2.19	Hay or Straw Mulch	32 92 19, 3.2.3.1	CQC-L1, SDQC-L1, D-L1, ER-L1	D-L1, ER-L1		Daily Quality Control Report/ Daily Activity Log (DQCR) 01 45 00.3.10.1 & Appen. C	Hay or straw mulch shall be spread uniformly at the rate of 2 tons per acre, as specified
2.20	Rolling	32 92 19, 3.2.4	CQC-L1, SDQC-L1, D-L1, ER-L1	D-L1, ER-L1		Daily Quality Control Report/ Daily Activity Log (DQCR) 01 45 00.3.10.1 & Appen. C	Immediately after seeding, firm entire area except for slopes in excess of 3 to 1 with a roller not exceeding 90 pounds for each foot of roller width.
2.21	Watering	32 92 19, 3.2.5	CQC-L1, SDQC-L1, D-L1, ER-L1	D-L1, ER-L1		Daily Quality Control Report/ Daily Activity Log (DQCR) 01 45 00.3.10.1 & Appen. C	Start watering areas seeded as required by temperature and wind conditions. Apply water at a rate sufficient to insure thorough wetting of soil to a depth of 2 inches without run off. During the germination process, seed is to be kept actively growing and not allowed to dry out.

3	ACCEPTANCE						
3.1	WARRANTY	32 92 19, 1.8	CQC-L5, D-L5, ER-L5,	D-L5, ER-L5		Transmittal 01 45 00.3.10.1. & Appen. C, Submittals 01 45 00.3.10.1. & Appen. C, D Submittal Register	The warranty shall meet the requirements specified in SECTION 01 61 03 EQUIPMENT AND MATERIALS.
3.2	Final Follow-up Control Phase Inspection	01 45 00	CQC-L5, D-L5, ER-L5,	D-L5, ER-L5	provide agenda > 48 Hours prior to meeting	Final Follow-up Control Phase Inspection Checklist & Punch-Out	Final Follow-up Control Phase Inspection checklist & punch out items have been completed.

(1): A HOLD POINT is a mandatory requirement - advance notification and acceptance (verbal/written) is required prior to continuing work.

(2): A NOTIFY POINT requires advance notification prior to performing the activity.

(3): The DISTRICT/PQACT inspection form / checklist is to be completed by the Contractor and member of the District/PQACT prior to the start of work. The inspection form/ checklist shall show no incompletions.

LEVEL 1 = CONTINUOUS INSPECTION OF ACTIVITIES, LEVEL 2 = MONITOR CRITICAL ACTIVITIES AND WITNESS TESTING, LEVEL 3 = RANDOM INSPECTION AND/OR AT COMPLETION OF WORK, LEVEL 4 = REVIEW OF PRECONSTRUCTION DOCUMENTATION, LEVEL 5 - REVIEW OF FINAL DOCUMENTS

CQC = CONTRACTOR QUALITY CONTROL SDQC = SPECIALIZED DISCIPLINE D = DISTRICT/PQACT ER = ENGINEER OF RECORD MCT = MANUFACTURER CERTIFICATION/TESTING

Approved By District/PQACT QA Manager: *D Roy Moseley* ***Date:*** *27July2018*

INSPECTION / TEST PLAN (ITP)
C-43 WEST BASIN STORAGE RESERVOIR
CONTRACT NUMBER: CN XXXXXXXXXX
CIVIL WORKS

Location: Hendry County, FL
Date Prepared:
Revision:
Contractor: **Prepared By:**

Groundwater Monitoring Wells
Spec. Section: 33 24 13

Item No.	Attribute / Activity Description	Acceptance Criteria (Codes, Std., Spec., Drawings, Etc.)	INSPECTION REQUIREMENTS			Forms / Records / References (3)	Comments
			Inspect	Hold (1)	Notify (2)		
1	PRE-CONSTRUCTION						
1.1	Contractor's Quality Control Plan, Site Health & Safety Plan and Permits	Quality Control 01 45 00, Safety Requirements 01 35 26, Permits & Fees 00 31 46	D-L4	D-L4		Plans and Permits	Plans have been submitted by Contractor and approved by the District/PQACT. All pemits have been obtained to begin work.
1.2	Preconstruction Submittals	Submittals 01 33 00 33 2 13	D-L4, ER-L4	D-L4, ER-L4		Transmittal 01 45 00.3.10.1. & Appen. C, Submittals 01 45 00.3.10.1. & Appen. C, Submittal Register	All preconstruction submittals for this DFOW shall be submitted by the Contractor and Approved by the District/PQACT.
1.3	Request For Information (RFIs)	Quality Control 01 45 00	D-L4, ER-L4	D-L4, ER-L4		Request for Information & Log 01 45 00.3.10.1 & Appen. C	All RFIs for this DFOW shall be answered in order to clear up any questions before work begins.
1.4	Work Plans	Quality Control 01 45 00	D-L4, ER-L4	D-L4, ER-L4		Plans	All work plans for this DFOW shall be submitted by the Contractor and approved by the District/PQACT.
1.5	Activity Hazard Analysis (AHA)	Safety Requirements 01 35 26	D-L4, ER-L4	D-L4, ER-L4		AHA 01 45 00.3.10.1 & Appen. C	The AHA for this DFOW have been submitted by the Contractor.
1.6	Previous Work Deficiencies & Non-Conformances of previous DFOW	Quality Control 01 45 00	CQC-L5, SDQC-L5, D-L5, ER-L5, MCT-L5	D-L4, ER-L4		Deficiency Logs and NCN Logs 01 45 00.3.10.1 & Appen. C	All deficiencies and non-conformances shall be corrected of previous work in order to avoid covering deficiencies.
1.7	Final Follow-up Control Phase Inspection of previous DFOW	Quality Control 01 45 00	CQC-L5, SDQC-L5, D-L5, ER-L5, MCT-L5	D-L4, ER-L4	48 Hours	Final Follow-up Control Phase Inspection Checklist & Punch-Out	Final Follow-up Control Phase Inspection checklist & punch out items shall be completed of previous work.
1.8	Preparatory Control Phase Inspection	Quality Control 01 45 00	CQC-L5, SDQC-L5, D-L5, ER-L5, MCT-L5	D-L4, ER-L4	48 Hours	Preparatory Control Phase Inspection Worksheet 01 45 00.3.10.1 & Appen. C	Preparatory Control Phase Inspection/Meeing shall be performed successfully without open issues.
2	CONSTRUCTION						
2.1	Initial Control Phase Inspection	01 45 00	CQC-L4, SDQC-L4, D-L4, ER-L4	D-L4, ER-L4	provide agenda > 48 Hours prior to meeting	Initial Control Phase Inspection Agenda 01 45 00.1.10.1.13, Initial Control Phase Inspection Checklist	An Initial Control Phase Inspection shall be performed shortly after the DFOW has begun to determine if the DFOW plan is working and if the workmanship of the workers is satisfactory and meets safety standards.
2.2	Daily Follow-up Control Phase Inspections	01 45 00	CQC-L4, SDQC-L4, D-L4, ER-L4	D-L4, ER-L4		Daily Quality Control Report/ Daily Activity Log (DQCR) 01 45 00.3.10.1 & Appen. C	Contractor to perform daily Follow-up Control Phase Inspections and document findings on DQCR.
2.3	PROTECTION OF EXISTING CONDITIONS	33 11 53, 3.1	CQC-L4, SDQC-L4, D-L4, ER-L4	D-L4, ER-L4	prior to starting excavation	Transmittal 01 45 00.3.10.1. & Appen. C, Submittals 01 45 00.3.10.1. & Appen. C, D Submittal Register	Prior to excavation, obtain written approval from the local utility companies to drill at each site, to avoid disturbing buried utilities.
2.4	Water Source	33 11 53, 3.2.3	CQC-L4, SDQC-L4, D-L4, ER-L4	D-L4, ER-L4	prior to it's use on the site	Transmittal 01 45 00.3.10.1. & Appen. C, Submittals 01 45 00.3.10.1. & Appen. C, D Submittal Register	Prior to its use at the site, Contractor shall sample and test the water source, and obtain approval from the District.
2.5	Sampling for Geotechnical Analysis	33 11 53, 3.3.3.1	CQC-L1, SDQC-L1, D-L1, ER-L1	D-L1, ER-1		Daily Quality Control Report/ Daily Activity Log (DQCR) 01 45 00.3.10.1 & Appen. C	Take samples of all materials penetrated by each drilled well/test hole. Perform soil sampling with a steel split tube sampler using standard sampling techniques in accordance with ASTM D1586.
2.6	Sampling for Geotechnical Analysis	33 11 53, 3.3.3.1	CQC-L1, SDQC-L1, D-L1, ER-L1	D-L1, ER-1		Daily Quality Control Report/ Daily Activity Log (DQCR) 01 45 00.3.10.1 & Appen. C	Extract samples from their in-situ environment in as near an intact, minimally disturbed condition as technically practical. Retrieve samples according to ASTM D1586 at least every 2.5 feet from each test hole.

2.7	Sampling for Geotechnical Analysis	33 11 53, 3.3.3.1	CQC-L1, SDQC-L1, D-L1, ER-L1	D-L1, ER-1		Daily Quality Control Report/ Daily Activity Log (DQCR) 01 45 00.3.10.1 & Appen. C	Place drive-sampled materials in airtight containers and label as specified in paragraph SAMPLE CONTAINERS, and deliver to the District designated facility.
2.8	Sampling for Geotechnical Analysis	33 11 53, 3.3.3.1	CQC-L1, SDQC-L1, D-L1, ER-L1	D-L1, ER-1		Daily Quality Control Report/ Daily Activity Log (DQCR) 01 45 00.3.10.1 & Appen. C	Place drive-sampled materials in airtight containers and label as specified in paragraph SAMPLE CONTAINERS, and deliver to the Contractor's on site facility.
2.9	Sampling for Geotechnical Analysis	33 11 53, 3.3.3.1	CQC-L1, SDQC-L1, D-L1, ER-L1	D-L1, ER-1		Daily Quality Control Report/ Daily Activity Log (DQCR) 01 45 00.3.10.1 & Appen. C	Test representative soil samples for grain-size distribution by mechanical means ASTM D422 (sieves down to the No. 200 size according to ASTM C136/C136M), moisture content according to ASTM D2216 and Atterberg limits according to ASTM D4318.
2.10	Sampling for Geotechnical Analysis	33 11 53, 3.3.3.1	CQC-L1, SDQC-L1, D-L1, ER-L1	D-L1, ER-1		Daily Quality Control Report/ Daily Activity Log (DQCR) 01 45 00.3.10.1 & Appen. C	Prepare description and identification of soils in accordance with ASTM D2488, laboratory classification of soils in accordance with ASTM D2487, and perform sampling to allow completion of the documents described in paragraph Borehole Logs.
2.11	Drilling Waste Disposal	33 11 53, 3.3.13	CQC-L1, SDQC-L1, D-L1, ER-L1	D-L1, ER-1		Daily Quality Control Report/ Daily Activity Log (DQCR) 01 45 00.3.10.1 & Appen. C	Dispose of slurry, drill cuttings, rock core; other solid or liquid material bailed, pumped, or otherwise removed from the borehole during drilling, installation, completion, and well development procedures; and fluids from material/equipment decontamination activities in area on the project site approved by the District.
2.12	Surveys	33 11 53, 3.4	CQC-L1, SDQC-L1, D-L1, ER-L1	D-L1, ER-1		Daily Quality Control Report/ Daily Activity Log (DQCR) 01 45 00.3.10.1 & Appen. C	Establish coordinates and elevations for each monitoring well/test hole as specified
2.13	WELL DECOMMISSIONING/ABANDONMENT	33 11 53, 3.4	CQC-L1, SDQC-L1, D-L1, ER-L1	D-L1, ER-1		Daily Quality Control Report/ Daily Activity Log (DQCR) 01 45 00.3.10.1 & Appen. C	Any well disapproved by the District, or any well decommissioned/abandoned by the Contractor for any reason shall be decommissioned/abandoned according to the requirements of the State of Florida, ASTM D5299, and the requirements of these specifications.
2.14	DOCUMENTATION AND QUALITY CONTROL REPORTS: Borehole Logs, Installation Diagrams, Well Development Records, Well Decommissioning/Abandonment Records and Survey Maps and Notes	33 11 53, 3.8	CQC-L4, SDQC-L4, D-L4, ER-L4	D-L4, ER-L4	prior to it's use on the site	Transmittal 01 45 00.3.10.1. & Appen. C, Submittals 01 45 00.3.10.1. & Appen. C, D Submittal Register	Submit reports for well construction and development. Establish and maintain documentation and quality control reports for well construction and development to record the desired information and to assure compliance with contract requirements, including, but not limited to the specifications
3	**ACCEPTANCE**						
3.1	As-built details of the well construction and development, including but not limited to: borehole logs, installation diagrams, well development records, and well decommissioning records	33 24 13, 3.8	CQC-L5, D-L5, ER-L5				
3.2	Final Follow-up Control Phase Inspection	01 45 00	CQC-L5, D-L5, ER-L5	D-L5, ER-L5	provide agenda > 48 Hours prior to meeting	Final Follow-up Control Phase Inspection Checklist & Punch-Out	Final Follow-up Control Phase Inspection checklist & punch out items have been completed.

(1): A HOLD POINT is a mandatory requirement - advance notification and acceptance (verbal/written) is required prior to continuing work.

(2): A NOTIFY POINT requires advance notification prior to performing the activity.

(3): The DISTRICT/PQACT inspection form / checklist is to be completed by the Contractor and member of the District/PQACT prior to the start of work. The inspection form/ checklist shall show no incompletions.

LEVEL 1 = CONTINUOUS INSPECTION OF ACTIVITIES, LEVEL 2 = MONITOR CRITICAL ACTIVITIES AND WITNESS TESTING, LEVEL 3 = RANDOM INSPECTION AND/OR AT COMPLETION OF WORK, LEVEL 4 = REVIEW OF PRECONSTRUCTION DOCUMENTATION, LEVEL 5 - REVIEW OF FINAL DOCUMENTS

CQC = CONTRACTOR QUALITY CONTROL SDQC = SPECIALIZED DISCIPLINE D = DISTRICT/PQACT ER = ENGINEER OF RECORD MCT = MANUFACTURER CERTIFICATION/TESTING

Approved By District/PQACT QA Manager: *D Roy Moseley* ***Date:*** *27July2018*

INSPECTION / TEST PLAN (ITP)
C-43 WEST BASIN STORAGE RESERVOIR
CONTRACT NUMBER: CN XXXXXXXXXX
CIVIL WORKS

Location: Hendry County, FL
Date Prepared:
Revision:
Contractor: **Prepared By:**

ROOF SYSTEM INSTALLATION & MISC. ROOF ACCESSORIES
Spec. Section: 07 61 13, 07 92 00

Item No.	Attribute / Activity Description	Acceptance Criteria (Codes, Std., Spec., Drawings, Etc.)	INSPECTION REQUIREMENTS			Forms / Records / References (3)	Comments
			Inspect	Hold (1)	Notify (2)		
1	PRE-CONSTRUCTION						
1.1	Contractor's Quality Control Plan, Site Health & Safety Plan and Permits	Quality Control 01 45 00, Safety Requirements 01 35 26, Permits & Fees 00 31 46	D-L4	D-L4		Plans and Permits	Plans have been submitted by Contractor and approved by the District/PQACT. All pemits have been obtained to begin work.
1.2	Preconstruction Submittals	Submittals 01 33 00 07 61 13, 07 92 00	D-L4, ER-L4	D-L4, ER-L4		Transmittal 01 45 00.3.10.1. & Appen. C, Submittals 01 45 00.3.10.1. & Appen. C, Submittal Register	All preconstruction submittals for this DFOW shall be submitted by the Contractor and Approved by the District/PQACT.
1.3	Request For Information (RFIs)	Quality Control 01 45 00	D-L4, ER-L4	D-L4, ER-L4		Request for Information & Log 01 45 00.3.10.1 & Appen. C	All RFIs for this DFOW shall be answered in order to clear up any questions before work begins.
1.4	Work Plans	Quality Control 01 45 00	D-L4, ER-L4	D-L4, ER-L4		Plans	All work plans for this DFOW shall be submitted by the Contractor and approved by the District/PQACT.
1.5	Activity Hazard Analysis (AHA)	Safety Requirements 01 35 26	D-L4, ER-L4	D-L4, ER-L4		AHA 01 45 00.3.10.1 & Appen. C	The AHA for this DFOW have been submitted by the Contractor.
1.6	Previous Work Deficiencies & Non-Conformances of previous DFOW	Quality Control 01 45 00	CQC-L5, SDQC-L5, D-L5, ER-L5, MCT-L5	D-L4, ER-L4		Deficiency Logs and NCN Logs 01 45 00.3.10.1 & Appen. C	All deficiencies and non-conformances shall be corrected of previous work in order to avoid covering deficiencies.
1.7	Final Follow-up Control Phase Inspection of previous DFOW	Quality Control 01 45 00	CQC-L5, SDQC-L5, D-L5, ER-L5, MCT-L5	D-L4, ER-L4	48 Hours	Final Follow-up Control Phase Inspection Checklist & Punch-Out	Final Follow-up Control Phase Inspection checklist & punch out items shall be completed of previous work.
1.8	Preparatory Control Phase Inspection	Quality Control 01 45 00	CQC-L5, SDQC-L5, D-L5, ER-L5, MCT-L5	D-L4, ER-L4	48 Hours	Preparatory Control Phase Inspection Worksheet 01 45 00.3.10.1 & Appen. C	Preparatory Control Phase Inspection/Meeing shall be performed successfully without open issues.
1.9	DELIVERY, STORAGE, AND HANDLING	07 61 13 - 1.7	CQC-L1, SDQC-L1, D-L1, ER-L1,	D-L1, ER-L1		Preparatory Control Phase Inspection Worksheet 01 45 00.3.10.1 & Appen. C	Deliver materials to site in an undamaged condition. Store materials off the ground to provide protection against oxidation caused by ground contact.
1.10	DELIVERY, STORAGE, AND HANDLING	07 61 13 - 1.7	CQC-L1, SDQC-L1, D-L1, ER-L1,	D-L1, ER-L1		Preparatory Control Phase Inspection Worksheet 01 45 00.3.10.1 & Appen. C	Store materials protected from exposure to harmful weather conditions and at temperature conditions recommended by manufacturer. Stack prefinished material to prevent twisting, bending, abrasion, scratching and denting. Provide factory installed strippable vinyl film protective coating to panels.
1.11	DELIVERY, STORAGE, AND HANDLING	07 61 13 - 1.7	CQC-L1, SDQC-L1, D-L1, ER-L1,	D-L1, ER-L1		Preparatory Control Phase Inspection Worksheet 01 45 00.3.10.1 & Appen. C	Deliver materials in manufacturer's original packaging with identification labels intact.

1.12	DELIVERY AND STORAGE	07 92 00, 1.6	CQC-L1, SDQC-L1, D-L1, ER-L1,	D-L1, ER-L1		Preparatory Control Phase Inspection Worksheet 01 45 00.3.10.1 & Appen. C	Deliver materials to the jobsite in unopened manufacturers' sealed shipping containers, with brand name, date of manufacture, color, and material designation clearly marked thereon. Label elastomeric sealant containers to identify type, class, grade, and use. Handle and store materials in accordance with manufacturer's printed instructions. Prevent exposure to foreign materials or subjection to sustained temperatures exceeding 90 degrees F or lower than 0 degrees F. Keep materials and containers closed and separated from absorptive materials such as wood and insulation.
2	**CONSTRUCTION**						
2.1	Initial Control Phase Inspection	01 45 00, 3.7.2	CQC-L5, SDQC-L5, D-L5, ER-L5,	D-L5, ER-L5	provide agenda > 48 hours prior to	Initial Control Phase Inspection Checklist 01 45 00.3.10.1, & Specifications Appendix C	An Initial Control Phase Inspection shall be performed shortly after the DFOW has begun to determine if the
2.2	Daily Follow-up Control Phase Inspections	01 45 00, 3.7.3	CQC-L1, SDQC-L1, D-L1, ER-L1,		N/A	Daily Quality Control Report/ Daily Activity Log (DQCR) 01 45 00.3.10.1 & Specifications Appendix C	Contractor to perform daily Follow-up Control Phase Inspections and document findings on DQCR.
2.3	INSPECTION	07 61 13 - 3.1	CQC-L1, SDQC-L1, D-L1, ER-L1,	D-L1, ER-L1		Daily Quality Control Report/ Daily Activity Log (DQCR) 01 45 00.3.10.1 & Specifications Appendix C, EMAIL Notification	Examine surfaces to receive metal panels and notify District in writing of any defects.
2.4	INSPECTION	07 61 13 - 3.1	CQC-L1, SDQC-L1, D-L1, ER-L1,	D-L1, ER-L1		Daily Quality Control Report/ Daily Activity Log (DQCR) 01 45 00.3.10.1 & Specifications Appendix C	Starting of Work by Contractor shall constitute acceptance of Work of others as satisfactory.
2.5	Protection	07 61 13 - 3.2	CQC-L1, SDQC-L1, D-L1, ER-L1,	D-L1, ER-L1		Daily Quality Control Report/ Daily Activity Log (DQCR) 01 45 00.3.10.1 & Specifications Appendix C	Installed Work shall be carefully protected against disfiguration, contamination, or damage by mechanical abuse or contact with other harmful materials. Wherever exposure to damage is critical, provide protective cover or barriers.
2.6	INSTALLATION	07 61 13 - 3.3	CQC-L1, SDQC-L1, D-L1, ER-L1,	D-L1, ER-L1		Daily Quality Control Report/ Daily Activity Log (DQCR) 01 45 00.3.10.1 & Specifications Appendix C	Roof panels shall be set plumb and true to line as indicated on Drawings with Work properly centered and well secured to adjoining construction, in such manner as to be rigid and watertight. Attachment to structure shall be by approved fastening method.
2.7	INSTALLATION	07 61 13 - 3.3	CQC-L1, SDQC-L1, D-L1, ER-L1,	D-L1, ER-L1		Daily Quality Control Report/ Daily Activity Log (DQCR) 01 45 00.3.10.1 & Specifications Appendix C	Erect panels to a tolerance not exceeding 1/4 inch per 20 feet.
2.8	INSTALLATION	07 61 13 - 3.3	CQC-L1, SDQC-L1, D-L1, ER-L1,	D-L1, ER-L1		Daily Quality Control Report/ Daily Activity Log (DQCR) 01 45 00.3.10.1 & Specifications Appendix C	Apply 1 coat of bituminous paint, concealed, on 1 or both surfaces wherever dissimilar metals would otherwise be in contact to eliminate possibility of corrosive or electrolytic action between metals.
2.9	INSTALLATION	07 61 13 - 3.3	CQC-L1, SDQC-L1, D-L1, ER-L1,	D-L1, ER-L1		Daily Quality Control Report/ Daily Activity Log (DQCR) 01 45 00.3.10.1 & Specifications Appendix C	Install sealants at joints and where sheets adjoin other work, as shown or required to achieve wind and watertight condition with Work in accordance with Manufacturer's recommendations.
2.10	FIELD QUALITY CONTROL	07 92 00 - 3.1	CQC-L1, SDQC-L1, D-L1, ER-L1,	D-L1, ER-L1		Daily Quality Control Report/ Daily Activity Log (DQCR) 01 45 00.3.10.1 & Specifications Appendix C	Perform a field adhesion test in accordance with manufacturer's instructions and ASTM C1193, Method A or ASTM C1521, Method A, Tail Procedure. Remove sealants that fail adhesion testing; clean substrates, reapply sealants, and re-test. Test sealants adjacent to failed sealants.
2.11	FIELD QUALITY CONTROL	07 92 00 - 3.1	CQC-5, D-5, ER-5,	D-L5, ER-L5		Transmittal 01 45 00.3.10.1. & Appen. C, Submittals 01 45 00.3.10.1. & Appen. C, Submittal Register	Submit field adhesion test report indicating tests, locations, dates, results, and remedial actions taken.
2.12	Joint Width-To-Depth Ratios	07 92 00 - 3.4.1	CQC-L1, SDQC-L1, D-L1, ER-L1,	D-L1, ER-L1		Daily Quality Control Report/ Daily Activity Log (DQCR) 01 45 00.3.10.1 & Specifications Appendix C	See Acceptable Ratios Table

2.13	Water Test	07 92 00 - 3.5	CQC-L2, SDQC-L2, D-L2, ER-L2	D-L2, ER-L2		Daily Quality Control Report/ Daily Activity Log (DQCR) 01 45 00.3.10.1 & Specifications Appendix C	For applications where the sealant provides a weather barrier, such as the joints between the tilt up panels, test entire joint using a water hose. Position a spray nozzle a maximum of five feet away and spray the joint directly, simulating a driving rain. No leakage into the building shall be observed. If so, repair or reapply joint sealants.
3	**ACCEPTANCE**						
3.1	Warranty STANDING SEAM SHEET METAL ROOFING)	07 61 13, 1.8	CQC-5, D-5, ER-5,	D-L5, ER-L5		Transmittal 01 45 00.3.10.1. & Appen. C, Submittals 01 45 00.3.10.1. & Appen. C, Submittal Register	The warranty shall meet the requirements specified in SECTION 01 61 03 EQUIPMENT AND MATERIALS.
3.2	Deficiencies & Non-Conformances of this DFOW	01 45 00	CQC-5, D-5, ER-5,	D-L5, ER-L5		Deficiency Logs and NCN Logs 01 45 00.3.10.1 & Appen. C	All deficiencies and non-conformances have been corrected of work in order to avoid covering deficiencies.
3.3	Final Follow-up Control Phase Inspection	01 45 00	CQC-5, D-5, ER-5,	D-L5, ER-L5	48 Hours	Final Follow-up Control Phase Inspection Checklist & Punch-Out	Final Follow-up Control Phase Inspection checklist & punch out items have been completed.

(1): A HOLD POINT is a mandatory requirement - advance notification and acceptance (verbal/written) is required prior to continuing work.

(2): A NOTIFY POINT requires advance notification prior to performing the activity.

(3): The DISTRICT/PQACT inspection form / checklist is to be completed by the Contractor and member of the District/PQACT prior to the start of work. The inspection form/ checklist shall show no incompletions.

LEVEL 1 = CONTINUOUS INSPECTION OF ACTIVITIES, LEVEL 2 = MONITOR CRITICAL ACTIVITIES AND WITNESS TESTING, LEVEL 3 = RANDOM INSPECTION AND/OR AT COMPLETION OF WORK, LEVEL 4 = REVIEW OF PRECONSTRUCTION DOCUMENTATION, LEVEL 5 - REVIEW OF FINAL DOCUMENTS

CQC = CONTRACTOR QUALITY CONTROL SDQC = SPECIALIZED DISCIPLINE D = DISTRICT/PQACT ER = ENGINEER OF RECORD MCT = MANUFACTURER CERTIFICATION/TESTING

Approved By District/PQACT QA Manager: *DRoy Moseley* ***Date:*** *28July2018*

INSPECTION / TEST PLAN (ITP)
C-43 WEST BASIN STORAGE RESERVOIR
CONTRACT NUMBER: CN XXXXXXXXXX
CIVIL WORKS

Location: Hendry County, FL
Date Prepared:
Revision:
Contractor: **Prepared By:**

Slab on Grade Concrete
Spec. Section: 03 11 13.00 10; 03 39 00.00 10

Item No.	Attribute / Activity Description	Acceptance Criteria (Codes, Std., Spec., Drawings, Etc.)	INSPECTION REQUIREMENTS			Forms / Records / References (3)	Comments
			Inspect	Hold (1)	Notify (2)		
1	PRE-CONSTRUCTION						
1.1	Contractor's Quality Control Plan, Site Health & Safety Plan and Permits	Quality Control 01 45 00, Safety Requirements 01 35 26, Permits & Fees 00 31 46	D-L4	D-L4		Plans and Permits	Plans have been submitted by Contractor and approved by the District/PQACT. All pemits have been obtained to begin work.
1.2	Preconstruction Submittals	Submittals 01 33 00 03 11 13.00 10, 03 39 00.00 10	D-L4, ER-L4	D-L4, ER-L4		Transmittal 01 45 00.3.10.1. & Appen. C, Submittals 01 45 00.3.10.1. & Appen. C, Submittal Register	All preconstruction submittals for this DFOW shall be submitted by the Contractor and Approved by the District/PQACT.
1.3	Request For Information (RFIs)	Quality Control 01 45 00	D-L4, ER-L4	D-L4, ER-L4		Request for Information & Log 01 45 00.3.10.1 & Appen. C	All RFIs for this DFOW shall be answered in order to clear up any questions before work begins.
1.4	Work Plans	Quality Control 01 45 00	D-L4, ER-L4	D-L4, ER-L4		Plans	All work plans for this DFOW shall be submitted by the Contractor and approved by the District/PQACT.
1.5	Activity Hazard Analysis (AHA)	Safety Requirements 01 35 26	D-L4, ER-L4	D-L4, ER-L4		AHA 01 45 00.3.10.1 & Appen. C	The AHA for this DFOW have been submitted by the Contractor.
1.6	Previous Work Deficiencies & Non-Conformances of previous DFOW	Quality Control 01 45 00	CQC-L5, SDQC-L5, D-L5, ER-L5, MCT-L5	D-L4, ER-L4		Deficiency Logs and NCN Logs 01 45 00.3.10.1 & Appen. C	All deficiencies and non-conformances shall be corrected of previous work in order to avoid covering deficiencies.
1.7	Final Follow-up Control Phase Inspection of previous DFOW	Quality Control 01 45 00	CQC-L5, SDQC-L5, D-L5, ER-L5, MCT-L5	D-L4, ER-L4	48 Hours	Final Follow-up Control Phase Inspection Checklist & Punch-Out	Final Follow-up Control Phase Inspection checklist & punch out items shall be completed of previous work.
1.8	Preparatory Control Phase Inspection	Quality Control 01 45 00	CQC-L5, SDQC-L5, D-L5, ER-L5, MCT-L5	D-L4, ER-L4	48 Hours	Preparatory Control Phase Inspection Worksheet 01 45 00.3.10.1 & Appen. C	Preparatory Control Phase Inspection/Meeing shall be performed successfully without open issues.
2	CONSTRUCTION						
2.1	Initial Control Phase Inspection	01 45 00, 3.7.2	CQC-L5, SDQC-L5, D-L5, ER-L5,	D-L5, ER-L5	provide agenda > 48 hours prior to meeting	Initial Control Phase Inspection Checklist 01 45 00.3.10.1, & Specifications Appendix C	An Initial Control Phase Inspection shall be performed shortly after the DFOW has begun to determine if the DFOW plan is working and if the workmanship of the workers is satisfactory and meets safety standards.
2.2	Daily Follow-up Control Phase Inspections	01 45 00, 3.7.3	CQC-L1, SDQC-L1, D-L1, ER-L1,		N/A	Daily Quality Control Report/ Daily Activity Log (DQCR) 01 45 00.3.10.1 & Specifications Appendix C	Contractor to perform daily Follow-up Control Phase Inspections and document findings on DQCR.
2.3	Forming Systems (Formwork, Form Ties, other)	03 11 13.00 10, 3.2	CQC-L2, D-L2, ER-L2	D-L2, ER-L2	Provide 24 hrs. notice for inspection	Transmittal 01 45 00.3.10.1. & Appen. C, Submittals 01 45 00.3.10.1. & Appen. C, Submittal Register	Inspect forms and embedded items in sufficient time prior to each concrete placement to certify to the District that they are ready to receive concrete. Report the results of each inspection in writing. Submit field inspection reports for concrete forms and embedded items.
2.4	Falsework Inspection	03 11 13.00, 3.2.1	CQC-L2, D-L2, ER-L2	D-L2, ER-L2	Provide 24 hrs. notice for inspection	Daily Quality Control Report/ Daily Activity Log (DQCR) 01 45 00.3.10.1 & Specifications Appendix C	Falsework shall be inspected for conformance with the accepted submittal. No workers will be allowed to use falsework for access and no concrete placement to related forms will be permitted until the falsework is inspected by the Contractor for conformance with the submittals and appropriately tagged.
	Falsework Inspection	03 11 13.00, 3.2.1	CQC-L2, D-L2, ER-L2	D-L2, ER-L2	Provide 24 hrs. notice for inspection	Daily Quality Control Report/ Daily Activity Log (DQCR) 01 45 00.3.10.1 & Specifications Appendix C	No variations or alterations to falsework, as compared to the reference submittal, will be allowed without certification of the variation by the original Professional Engineer.

	Waterstop Joint Inspection	03 11 13.00, 3.2.2	CQC-L2, D-L2, ER-L2	D-L2, ER-L2	Provide 24 hrs. notice for inspection	Daily Quality Control Report/ Daily Activity Log (DQCR) 01 45 00.3.10.1 & Specifications Appendix C	All waterstop field joints shall be subject to rigid inspection, and no such WORK shall be scheduled or started without having made prior arrangements with the DISTRICT for the required inspections. Not less than 24 hours advance notice shall be given for scheduling such inspections.
	Waterstop Joint Criteria	03 11 13.00, 3.2.3	CQC-L2, D-L2, ER-L2	D-L2, ER-L2		Daily Quality Control Report/ Daily Activity Log (DQCR) 01 45 00.3.10.1 & Specifications Appendix C	Field joints in waterstops shall be subject to rigid inspection for misalignment, bubbles, inadequate bond, porosity, cracks, offsets, and other defects, which would reduce the potential resistance of the material to water pressure at any point. Defective joints shall be replaced with material, which passes inspection; faulty material shall be removed from the site and properly disposed of.
	CONCRETE CURING - DELIVERY, STORAGE, AND HANDLING	03 39 00.00 10, 1.3	CQC-L1, D-L1, ER-L1	D-L1, ER-L1		Daily Quality Control Report/ Daily Activity Log (DQCR) 01 45 00.3.10.1 & Specifications Appendix C	Store materials in such a manner as to avoid contamination and deterioration. Materials must be capable of being accurately identified after bundles or containers are opened.
	WATER	03 39 00.00 10, 2.2	CQC-L1, D-L1, ER-L1	D-L1, ER-L1		Daily Quality Control Report/ Daily Activity Log (DQCR) 01 45 00.3.10.1 & Specifications Appendix C	Provide water for curing that is fresh, clean, potable, and free of injurious amounts of oil, acid, salt, or alkali, except that non-potable water may be used if it meets the requirements of ASTM C1602/C1602M.
2.5	CURING AND PROTECTION	03 39 00.00 10, 3.1	CQC-L1, D-L1, ER-L1	D-L1, ER-L1		Daily Quality Control Report/ Daily Activity Log (DQCR) 01 45 00.3.10.1 & Specifications Appendix C	Cure and protect concrete in accordance with ACI 301 Section 5 and as specified. Cure concrete a minimum of seven days.
2.6	General Curing	03 39 00.00 10, 3.1.2	CQC-L1, D-L1, ER-L1	D-L1, ER-L1		Daily Quality Control Report/ Daily Activity Log (DQCR) 01 45 00.3.10.1 & Specifications Appendix C	Keep concrete continuously moist and at a temperature of at least 50 degrees Fahrenheit for minimum of 7 days after placement.
2.7	Sprayed Membrane Curing Compound	03 39 00.00 10, 3.1.3	CQC-L1, D-L1, ER-L1	D-L1, ER-L1		Daily Quality Control Report/ Daily Activity Log (DQCR) 01 45 00.3.10.1 & Specifications Appendix C	Each day forms remain in place count as 1 day of water curing.
2.8	Sprayed Membrane Curing Compound	03 39 00.00 10, 3.1.3	CQC-L1, D-L1, ER-L1	D-L1, ER-L1		Daily Quality Control Report/ Daily Activity Log (DQCR) 01 45 00.3.10.1 & Specifications Appendix C	Flood top of walls with water at least 3 times per day, and keep concrete surfaces moist at all times during 7 day curing period.
2.9	Sprayed Membrane Curing Compound	03 39 00.00 10, 3.1.4	CQC-L1, D-L1, ER-L1	D-L1, ER-L1		Daily Quality Control Report/ Daily Activity Log (DQCR) 01 45 00.3.10.1 & Specifications Appendix C	Apply curing compound to concrete surface after repairing and patching, and within 1 hour after forms are removed. If more than 1 hour elapses after removal of forms, do not use curing compound, but use water curing for full curing period.
	TESTING AND INSPECTION FOR CQC	03 39 00.00 10, 3.2	CQC-L1, D-L1, ER-L1	D-L1, ER-L1		Transmittal 01 45 00.3.10.1. & Appen. C, Submittals 01 45 00.3.10.1. & Appen. C, Submittal Register	Perform the inspection and tests described below and, based upon the results of these inspections and tests, take the action required. Submit certified copies of laboratory test reports, including curing compound proposed for use on this project.
	Moist Curing Inspections	03 39 00.00 10, 3.2.1	CQC-L1, D-L1, ER-L1	D-L1, ER-L1		Daily Quality Control Report/ Daily Activity Log (DQCR) 01 45 00.3.10.1 & Specifications Appendix C	At least once each shift, and not less than twice per day on both work and non-work days, inspect all areas subject to moist curing. Note and record the surface moisture condition.
	Moist Curing Corrective Action	03 39 00.00 10, 3.2.2	CQC-L1, D-L1, ER-L1	D-L1, ER-L1		Daily Quality Control Report/ Daily Activity Log (DQCR) 01 45 00.3.10.1 & Specifications Appendix C	When a daily inspection report lists an area of inadequate curing, take immediate corrective action, and extend the required curing period for those areas by 1 day.
	Membrane Curing Inspection	03 39 00.00 10, 3.2.3	CQC-L1, D-L1, ER-L1	D-L1, ER-L1	Properly mixed	Daily Quality Control Report/ Daily Activity Log (DQCR) 01 45 00.3.10.1 & Specifications Appendix C	Apply no curing compound until the Contractor has verified that the compound is properly mixed and ready for spraying. At the end of each operation, estimate the quantity of compound used by measurement of the container and the area of concrete surface covered, compute the rate of coverage in square feet/gallon, and note whether or not coverage is uniform.

	Membrane Curing Corrective Action	03 39 00.00 10, 3.2.4	CQC-L1, D-L1, ER-L1	D-L1, ER-L1		Daily Quality Control Report/ Daily Activity Log (DQCR) 01 45 00.3.10.1 & Specifications Appendix C	When the coverage rate of the curing compound is less than that specified or when the coverage is not uniform, spray the entire surface again.
2.10	Sheet Curing Inspection	03 39 00.00 10, 3.2.5	CQC-L1, D-L1, ER-L1	D-L1, ER-L1		Daily Quality Control Report/ Daily Activity Log (DQCR) 01 45 00.3.10.1 & Specifications Appendix C	At least once each shift and once per day on non-work days, inspection all areas being cured using impervious sheets. Note and record the condition of the covering and the tightness of the laps and tapes.
2.11	Sheet Curing Corrective Action	03 39 00.00 10, 3.2.6	CQC-L1, D-L1, ER-L1	D-L1, ER-L1		Daily Quality Control Report/ Daily Activity Log (DQCR) 01 45 00.3.10.1 & Specifications Appendix C	When a daily inspection report lists any tears, holes, or laps or joints that are not completely closed, promptly repair the tears and holes or replace the sheets, close the joints, and extend the required curing period for those areas by 1 day.
3	**ACCEPTANCE**						
3.1	Complete as-built surveys and prepare Record drawings	GT 6.12	CQC -L1,D-L1, ER-L3	D-L3, ER-L7		General Term & Conditions	As-built surveys of the constructed pump station, underground utilities, and microwave tower.
3.2	Deficiencies & Non-Conformances of this DFOW	01 45 00	CQC-L5, SDQC-L5, D-L5, ER-L5			Deficiency Logs and NCN Logs 01 45 00.3.10.1 & Append. C	All deficiencies and non-conformances have been corrected of work in order to avoid covering deficiencies.
3.3	Final Follow-up Control Phase Inspection	01 45 00	CQC-L5, D-L5, ER-L5,	D-L5, ER-L5	48 Hours	Final Follow-up Control Phase Inspection Checklist & Punch-Out	Final Follow-up Control Phase Inspection checklist & punch out items have been completed.

(1): A HOLD POINT is a mandatory requirement - advance notification and acceptance (verbal/written) is required prior to continuing work.

(2): A NOTIFY POINT requires advance notification prior to performing the activity.

(3): The DISTRICT/PQACT inspection form / checklist is to be completed by the Contractor and member of the District/PQACT prior to the start of work. The inspection form/ checklist shall show no incompletions.

LEVEL 1 = CONTINUOUS INSPECTION OF ACTIVITIES, LEVEL 2 = MONITOR CRITICAL ACTIVITIES AND WITNESS TESTING, LEVEL 3 = RANDOM INSPECTION AND/OR AT COMPLETION OF WORK, LEVEL 4 = REVIEW OF PRECONSTRUCTION DOCUMENTATION, LEVEL 5 - REVIEW OF FINAL DOCUMENTS

CQC = CONTRACTOR QUALITY CONTROL SDQC = SPECIALIZED DISCIPLINE D = DISTRICT/PQACT ER = ENGINEER OF RECORD MCT = MANUFACTURER CERTIFICATION/TESTING

Approved By District/PQACT QA Manager: *DRoy Moseley* ***Date:*** *28July2018*

INSPECTION / TEST PLAN (ITP)
C-43 WEST BASIN STORAGE RESERVOIR
CONTRACT NUMBER: CN XXXXXXXXXX
CIVIL WORKS

Location: Hendry County, FL
Date Prepared:
Revision:
Contractor: **Prepared By:**

CMU BLOCK INSTALLATION
Spec. Section: 04 20 00

Item No.	Attribute / Activity Description	Acceptance Criteria (Codes, Std., Spec., Drawings, Etc.)	INSPECTION REQUIREMENTS			Forms / Records / References (3)	Comments
			Inspect	Hold (1)	Notify (2)		
1	PRE-CONSTRUCTION						
1.1	Contractor's Quality Control Plan, Site Health & Safety Plan and Permits	Quality Control 01 45 00, Safety Requirements 01 35 26, Permits & Fees 00 31 46	D-L4	D-L4		Plans and Permits	Plans have been submitted by Contractor and approved by the District/PQACT. All pemits have been obtained to begin work.
1.2	Preconstruction Submittals	Submittals 01 33 00 04 20 00	D-L4, ER-L4	D-L4, ER-L4		Transmittal 01 45 00.3.10.1. & Appen. C, Submittals 01 45 00.3.10.1. & Appen. C, Submittal Register	All preconstruction submittals for this DFOW shall be submitted by the Contractor and Approved by the District/PQACT.
1.3	Request For Information (RFIs)	Quality Control 01 45 00	D-L4, ER-L4	D-L4, ER-L4		Request for Information & Log 01 45 00.3.10.1 & Appen. C	All RFIs for this DFOW shall be answered in order to clear up any questions before work begins.
1.4	Work Plans	Quality Control 01 45 00	D-L4, ER-L4	D-L4, ER-L4		Plans	All work plans for this DFOW shall be submitted by the Contractor and approved by the District/PQACT.
1.5	Activity Hazard Analysis (AHA)	Safety Requirements 01 35 26	D-L4, ER-L4	D-L4, ER-L4		AHA 01 45 00.3.10.1 & Appen. C	The AHA for this DFOW have been submitted by the Contractor.
1.6	Previous Work Deficiencies & Non-Conformances of previous DFOW	Quality Control 01 45 00	CQC-L5, SDQC-L5, D-L5, ER-L5, MCT-L5	D-L4, ER-L4		Deficiency Logs and NCN Logs 01 45 00.3.10.1 & Appen. C	All deficiencies and non-conformances shall be corrected of previous work in order to avoid covering deficiencies.
1.7	Final Follow-up Control Phase Inspection of previous DFOW	Quality Control 01 45 00	CQC-L5, SDQC-L5, D-L5, ER-L5, MCT-L5	D-L4, ER-L4	48 Hours	Final Follow-up Control Phase Inspection Checklist & Punch-Out	Final Follow-up Control Phase Inspection checklist & punch out items shall be completed of previous work.
1.8	Preparatory Control Phase Inspection	Quality Control 01 45 00	CQC-L5, SDQC-L5, D-L5, ER-L5, MCT-L5	D-L4, ER-L4	48 Hours	Preparatory Control Phase Inspection Worksheet 01 45 00.3.10.1 & Appen. C	Preparatory Control Phase Inspection/Meeing shall be performed successfully without open issues.
1.9	DELIVERY, STORAGE, AND HANDLING	04 20 00, 1.4	CQC-L1, SDQC-L1, D-L1, ER-L1, MCT-L1	D-L1, ER-L1		Daily Quality Control Report/ Daily Activity Log (DQCR) 01 45 00.3.10.1 & Appen. C	Deliver, store, handle, and protect material to avoid chipping, breakage, and contact with soil or contaminating material. Store and prepare materials in already disturbed areas to minimize project site disturbance and size of project site.
2	CONSTRUCTION						
2.1	Initial Control Phase Inspection	Quality Control 01 45 00, 3.7.2	CQC-L5, SDQC-L5, D-L5, ER-L5,	D-L5, ER-L5	provide agenda > 48 hours prior to	Initial Control Phase Inspection Checklist 01 45 00.3.10.1, & Specifications Appendix C	An Initial Control Phase Inspection shall be performed shortly after the DFOW has begun to determine if the
2.2	Daily Follow-up Control Phase Inspections	Quaity Control 01 45 00	CQC-L1			Daily Quality Control Report/ Daily Activity Log (DQCR) 01 45 00.3.10.1 & Appen. C	Contractor to perform daily Follow-up Control Phase Inspections and document findings on DQCR.
2.3	EXAMINATION	04.20.00, 3.1	CQC-L1, SDQC-L1, D-L1, ER-L1, MCT-L1	D-L1, ER-L1		Daily Quality Control Report/ Daily Activity Log (DQCR) 01 45 00.3.10.1 & Appen. C	Prior to start of work, verify the applicable conditions as set forth in TMS MSJC, inspection.
2.4	Concrete Surfaces	04.20.00, 3.2.3	CQC-L1, SDQC-L1, D-L1, ER-L1, MCT-L1	D-L1, ER-L1		Daily Quality Control Report/ Daily Activity Log (DQCR) 01 45 00.3.10.1 & Appen. C	Where masonry is to be placed, clean concrete of laitance, dust, dirt, oil, organic matter, or other foreign materials and slightly roughen to provide a surface texture with a depth of at least 1/8 inch.
2.5	Bracing	04.20.00, 3.2.5	CQC-L1, SDQC-L1, D-L1, ER-L1, MCT-L1	D-L1, ER-L1		Daily Quality Control Report/ Daily Activity Log (DQCR) 01 45 00.3.10.1 & Appen. C	Do not remove bracing in less than 10 days.
2.6	Tolerances	04.20.00, 3.5.4	CQC-L1, SDQC-L1, D-L1, ER-L1, MCT-L1	D-L1, ER-L1		Daily Quality Control Report/ Daily Activity Log (DQCR) 01 45 00.3.10.1 & Appen. C	Lay masonry plumb, true to line, with courses level within the tolerances of TMS MSJC, Article 3.3 F.

2.7	Field Testing of Mortar	04.20.00, 3.6.1	CQC-L1, SDQC-L1, D-L1, ER-L1, MCT-L1	D-L1, ER-L1		Daily Quality Control Report/ Daily Activity Log (DQCR) 01 45 00.3.10.1 & Appen. C	Perform mortar testing at the following frequency: one time per day. For each required mortar test, provide a minimum of three mortar samples. Perform initial mortar testing prior to construction for comparison purposes during construction.
2.8	Field Testing of Mortar	04.20.00, 3.6.1	CQC-L1, SDQC-L1, D-L1, ER-L1, MCT-L1	D-L1, ER-L1		Daily Quality Control Report/ Daily Activity Log (DQCR) 01 45 00.3.10.1 & Appen. C	Prepare and test mortar samples for mortar aggregate ratio in accordance with ASTM C780 Annex A7.
2.9	Field Testing of Grout	04.20.00, 3.6.1.2	CQC-L1, SDQC-L1, D-L1, ER-L1, MCT-L1	D-L1, ER-L1		Daily Quality Control Report/ Daily Activity Log (DQCR) 01 45 00.3.10.1 & Appen. C	Perform grout testing at the following frequency: one time per day. For each required grout property to be evaluated, provide a minimum of three specimens.
2.10	Field Testing of Grout	04.20.00, 3.6.1.2	CQC-L1, SDQC-L1, D-L1, ER-L1, MCT-L1	D-L1, ER-L1		Daily Quality Control Report/ Daily Activity Log (DQCR) 01 45 00.3.10.1 & Appen. C	Sample and test conventional and self-consolidating grout for compressive strength and temperature in accordance with ASTM C1019.
2.11	Field Testing of Grout	04.20.00, 3.6.1.2	CQC-L1, SDQC-L1, D-L1, ER-L1, MCT-L1	D-L1, ER-L1		Daily Quality Control Report/ Daily Activity Log (DQCR) 01 45 00.3.10.1 & Appen. C	Evaluate slump in conventional grout in accordance with ASTM C1019.
2.12	Field Testing of Grout	04.20.00, 3.6.1.2	CQC-L1, SDQC-L1, D-L1, ER-L1, MCT-L1	D-L1, ER-L1		Daily Quality Control Report/ Daily Activity Log (DQCR) 01 45 00.3.10.1 & Appen. C	Evaluate slump flow and visual stability index of self-consolidating grout in accordance with ASTM C1611/C1611M.
2.13	CLOSE-OUT TAKE-BACK PROGRAM	04.20.00, 3.8	CQC-L1, SDQC-L1, D-L1, ER-L1, MCT-L1	D-L1, ER-L1		Daily Quality Control Report/ Daily Activity Log (DQCR) 01 45 00.3.10.1 & Appen. C	Collect information from manufacturer for take-back program options. Set aside masonry units, full and partial to be returned to manufacturer for recycling into new product. When such a service is not available, seek local recyclers to reclaim the materials.
2.14	CLOSE-OUT TAKE-BACK PROGRAM	04.20.00, 3.8	CQC-L5, SDQC-L5, D-L5, ER-L5,	D-L5, ER-L5		Transmittal 01 45 00.3.10.1. & Appen. C, Submittals 01 45 00.3.10.1. & Appen. C, Submittal Register	Submit documentation that includes contact information, summary of procedures, and the limitations and conditions applicable to the project. Indicate manufacturer's commitment to reclaim materials for recycling and/or reuse.
2.15	PROTECTION	04.20.00, 3.9	CQC-L1, SDQC-L1, D-L1, ER-L1, MCT-L1	D-L1, ER-L1		Daily Quality Control Report/ Daily Activity Log (DQCR) 01 45 00.3.10.1 & Appen. C	Protect facing materials against staining as specified.
3	**ACCEPTANCE**						
3.1	Deficiencies & Non-Conformances of this DFOW	Quality Control 01 45 00	CQC-5, SDQC-5, D-5, ER-5, MCT-5	D-L4, ER-L4		Deficiency Logs and NCN Logs 01 45 00.3.10.1 & Appen. C	All deficiencies and non-conformances shall be corrected of work in order to avoid covering deficiencies.
3.2	WARRANTY	04 20 00, 1.6	CQC-L5, SDQC-L5, D-L5, ER-L5,	D-L5, ER-L5		Transmittal 01 45 00.3.10.1. & Appen. C, Submittals 01 45 00.3.10.1. & Appen. C, Submittal Register	The warranty shall meet the requirements specified in SECTION 01 61 03 EQUIPMENT AND MATERIALS.
3.3	Final Follow-up Control Phase Inspection	Quality Control 01 45 00	CQC-5, SDQC-5, D-5, ER-5, MCT-5	D-L4, ER-L4	48 Hours	Final Follow-up Control Phase Inspection Checklist & Punch-Out	Final Follow-up Control Phase Inspection checklist & punch out itemsshall be completed.

(1): A HOLD POINT is a mandatory requirement - advance notification and acceptance (verbal/written) is required prior to continuing work.
(2): A NOTIFY POINT requires advance notification prior to performing the activity.
(3): The DISTRICT/PQACT inspection form / checklist is to be completed by the Contractor and member of the District/PQACT prior to the start of work. The inspection form/ checklist shall show no incompletions.

LEVEL 1 = CONTINUOUS INSPECTION OF ACTIVITIES, LEVEL 2 = MONITOR CRITICAL ACTIVITIES AND WITNESS TESTING, LEVEL 3 = RANDOM INSPECTION AND/OR AT COMPLETION OF WORK, LEVEL 4 = REVIEW OF PRECONSTRUCTION DOCUMENTATION, LEVEL 5 - REVIEW OF FINAL DOCUMENTS

CQC = CONTRACTOR QUALITY CONTROL SDQC = SPECIALIZED DISCIPLINE D = DISTRICT/PQACT ER = ENGINEER OF RECORD MCT = MANUFACTURER CERTIFICATION/TESTING

Approved By District/PQACT QA Manager: *D Roy Moseley* ***Date:*** *30July2018*

INSPECTION / TEST PLAN (ITP)
C-43 WEST BASIN STORAGE RESERVOIR
CONTRACT NUMBER: CN XXXXXXXXXX
CIVIL WORKS

Location: Hendry County, FL
Date Prepared:
Revision:
Contractor: **Prepared By:**

INSTALLATION OF SHEETPILE WINGWALLS
Spec. Section: 31 41 16, 05 12 00

Item No.	Attribute / Activity Description	Acceptance Criteria (Codes, Std., Spec., Drawings, Etc.)	INSPECTION REQUIREMENTS			Forms / Records / References (3)	Comments
			Inspect	Hold (1)	Notify (2)		
1	PRE-CONSTRUCTION						
1.1	Contractor's Quality Control Plan, Site Health & Safety Plan and Permits	Quality Control 01 45 00, Safety Requirements 01 35 26, Permits & Fees 00 31 46	D-L4	D-L4		Plans and Permits	Plans have been submitted by Contractor and approved by the District/PQACT. All pemits have been obtained to begin work.
1.2	Preconstruction Submittals	Submittals 01 33 00 31 41 16, 05 12 00	D-L4, ER-L4	D-L4, ER-L4		Transmittal 01 45 00.3.10.1. & Appen. C, Submittals 01 45 00.3.10.1. & Appen. C, Submittal Register	All preconstruction submittals for this DFOW shall be submitted by the Contractor and Approved by the District/PQACT.
1.3	Request For Information (RFIs)	Quality Control 01 45 00	D-L4, ER-L4	D-L4, ER-L4		Request for Information & Log 01 45 00.3.10.1 & Appen. C	All RFIs for this DFOW shall be answered in order to clear up any questions before work begins.
1.4	Work Plans	Quality Control 01 45 00	D-L4, ER-L4	D-L4, ER-L4		Plans	All work plans for this DFOW shall be submitted by the Contractor and approved by the District/PQACT.
1.5	Activity Hazard Analysis (AHA)	Safety Requirements 01 35 26	D-L4, ER-L4	D-L4, ER-L4		AHA 01 45 00.3.10.1 & Appen. C	The AHA for this DFOW have been submitted by the Contractor.
1.6	Previous Work Deficiencies & Non-Conformances of previous DFOW	Quality Control 01 45 00	CQC-L5, SDQC-L5, D-L5, ER-L5, MCT-L5	D-L4, ER-L4		Deficiency Logs and NCN Logs 01 45 00.3.10.1 & Appen. C	All deficiencies and non-conformances shall be corrected of previous work in order to avoid covering deficiencies.
1.7	Final Follow-up Control Phase Inspection of previous DFOW	Quality Control 01 45 00	CQC-L5, SDQC-L5, D-L5, ER-L5, MCT-L5	D-L4, ER-L4	48 Hours	Final Follow-up Control Phase Inspection Checklist & Punch-Out	Final Follow-up Control Phase Inspection checklist & punch out items shall be completed of previous work.
1.8	Preparatory Control Phase Inspection	Quality Control 01 45 00	CQC-L5, SDQC-L5, D-L5, ER-L5, MCT-L5	D-L4, ER-L4	48 Hours	Preparatory Control Phase Inspection Worksheet 01 45 00.3.10.1 & Appen. C	Preparatory Control Phase Inspection/Meeing shall be performed successfully without open issues.
1.9	DELIVERY, STORAGE, AND HANDLING	31 41 16, 1.4	CQC-L1, SQDC-L1, D-L1, ER-L1			Daily Quality Control Report/ Daily Activity Log (DQCR) 01 45 00.3.10.1 & Specifications Appendix C	Materials delivered to the site shall be new and undamaged and shall be accompanied by certified test reports. Provide the Manufacturer's logo and mill identification mark on the sheet piling as required by the referenced specifications. Store and handle sheet piling in the manner recommended by the Manufacturer to prevent permanent deflection, distortion or damage to the interlocks; as a minimum, support on level blocks or racks spaced not more than 10 feet apart and not more than 2 feet from the ends. Storage of sheet piling should also facilitate required inspection activities and prevent damage to coatings and corrosion prior to installation.
2	CONSTRUCTION						
2.1	Initial Control Phase Inspection	01 45 00, 3.7.2	CQC-L5, SDQC-L5, D-L5, ER-L5,	D-L5, ER-L5	provide agenda > 48 hours prior to meeting	Initial Control Phase Inspection Checklist 01 45 00.3.10.1, & Specifications Appendix C	An Initial Control Phase Inspection shall be performed shortly after the DFOW has begun to determine if the DFOW plan is working and if the workmanship of the workers is satisfactory and meets safety standards.
2.2	Daily Follow-up Control Phase Inspections	01 45 00, 3.7.3	CQC-L1, SDQC-L1, D-L1, ER-L1,		N/A	Daily Quality Control Report/ Daily Activity Log (DQCR) 01 45 00.3.10.1 & Specifications Appendix C	Contractor to perform daily Follow-up Control Phase Inspections and document findings on DQCR.
2.3	Placing	31 41 16, 3.2.2.1	CQC-L1, SDQC-L1, D-L1, ER-L1,	D-L1, ER-L1		Daily Quality Control Report/ Daily Activity Log (DQCR) 01 45 00.3.10.1 & Specifications Appendix C	Any excavation required within the area where sheet pilings are to be installed shall be completed prior to placing sheet pilings. Pilings properly placed and driven shall be interlocked throughout their length with adjacent pilings to form a continuous diaphragm throughout the length or run of piling wall.
2.4	Driving	31 41 16, 3.2.2.2	CQC-L5, SDQC-L5, D-L5, ER-L5,	D-L5, ER-L5		Transmittal 01 45 00.3.10.1. & Appen. C, Submittals 01 45 00.3.10.1. & Appen. C, D Submittal Register	Submit records of the completed sheet piling driving operations, including a system of identification which shows the disposition of approved piling in the Work, driving equipment performance data, piling penetration rate data, piling dimensions and top and bottom elevations of installed piling.
2.5	Cutting-Off and Splicing	31 41 16, 3.2.3	CQC-L1, SDQC-L1, D-L1, ER-L1,	D-L1, ER-L1		Daily Quality Control Report/ Daily Activity Log (DQCR) 01 45 00.3.10.1 & Specifications Appendix C	Pilings driven to refusal or to the point where additional penetration cannot be attained and are extending above the required top elevation in excess of the specified tolerance shall be cut off to the required elevation.
2.6	Inspection of Driven Piling	31 41 16, 3.2.4	CQC-L1, SDQC-L1, D-L1, ER-L1,	D-L1, ER-L1		Daily Quality Control Report/ Daily Activity Log (DQCR) 01 45 00.3.10.1 & Specifications Appendix C	Perform continuous inspection during pile driving. Inspect all piles for compliance with tolerance requirements. Bring any unusual problems which may occur to the attention of the Construction Manager.

2.7	Inspection of Driven Piling	31 41 16, 3.2.4	CQC-L1, SDQC-L1, D-L1, ER-L1,	D-L1, ER-L1		Daily Quality Control Report/ Daily Activity Log (DQCR) 01 45 00.3.10.1 & Specifications Appendix C	Inspect the interlocked joints of driven pilings extending above ground. Pilings found to be out of interlock shall be removed and replaced at the Contractor's expense. Use divers to inspect underwater interlocked joints of cofferdam sheet piling
2.8	Inspection of Driven Piling	31 41 16, 3.2.4	CQC-L1, SDQC-L1, D-L1, ER-L1,	D-L1, ER-L1		Daily Quality Control Report/ Daily Activity Log (DQCR) 01 45 00.3.10.1 & Specifications Appendix C	District divers may also inspect the interlocked joints.
2.9	Inspection of Driven Piling	31 41 16, 3.2.4	CQC-L1, SDQC-L1, D-L1, ER-L1,	D-L1, ER-L1		Daily Quality Control Report/ Daily Activity Log (DQCR) 01 45 00.3.10.1 & Specifications Appendix C	The inspection of cofferdams shall be performed after driving is completed, prior to filling each cell and connecting arc, and within 48 hours after filling each cell and arc.
2.10	Inspection	31 41 16, 3.7.3.2	CQC-L1, SDQC-L1, D-L1, ER-L1,	D-L1, ER-L1		Daily Quality Control Report/ Daily Activity Log (DQCR) 01 45 00.3.10.1 & Specifications Appendix C	Inspection procedures must be in accordance with AISC 360. Confirm and report to the District that the materials meet the project specification and that they are properly stored.
2.11	Inspection	31 41 16, 3.7.3.2	CQC-L1, SDQC-L1, D-L1, ER-L1,	D-L1, ER-L1		Daily Quality Control Report/ Daily Activity Log (DQCR) 01 45 00.3.10.1 & Specifications Appendix C	Confirm that the faying surfaces have been properly prepared before the connections are assembled.
2.12	Inspection	31 41 16, 3.7.3.2	CQC-L1, SDQC-L1, D-L1, ER-L1,	D-L1, ER-L1		Daily Quality Control Report/ Daily Activity Log (DQCR) 01 45 00.3.10.1 & Specifications Appendix C	Observe the specified job site testing and calibration, and confirm that the procedure to be used provides the required tension.
2.13	Inspection	31 41 16, 3.7.3.2	CQC-L1, SDQC-L1, D-L1, ER-L1,	D-L1, ER-L1		Daily Quality Control Report/ Daily Activity Log (DQCR) 01 45 00.3.10.1 & Specifications Appendix C	Monitor the work to ensure the testing procedures are routinely followed on joints that are specified to be fully tensioned.
3	**ACCEPTANCE**						
3.1	Deficiencies & Non-Conformances of this DFOW	Quality Control 01 45 00	CQC-5, SDQC-5, D-5, ER-5, MCT-5	D-L5, ER-L4		Deficiency Logs and NCN Logs 01 45 00.3.10.1 & Appendix C	All deficiencies and non-conformances have been corrected of work in order to avoid covering deficiencies.
3.2	Final Follow-up Control Phase Inspection	01 45 00, 3.9.3	CQC-L5, D-L5, ER-L5,	D-L5, ER-L5	provide agenda > 48 hours prior to meeting	Final Follow-up Control Phase Inspection Checklist & Punch-Out 01 45 00.3.10.1 & Specifications Appendix C	Final Follow-up Control Phase Inspection checklist & punch out items have been completed.

(1): A HOLD POINT is a mandatory requirement - advance notification and acceptance (verbal/written) is required prior to continuing work.

(2): A NOTIFY POINT requires advance notification prior to performing the activity.

(3): The DISTRICT/PQACT inspection form / checklist is to be completed by the Contractor and member of the District/PQACT prior to the start of work. The inspection form/ checklist shall show no incompletions.

LEVEL 5 - REVIEW OF FINAL DOCUMENTS

CQC = CONTRACTOR QUALITY CONTROL SDQC = SPECIALIZED DISCIPLINE D = DISTRICT/PQACT ER = ENGINEER OF RECORD MCT = MANUFACTURER CERTIFICATION/TESTING

Approved By District/PQACT QA Manager: *DRoy Moseley* ***Date:*** *28July2018*

INSPECTION / TEST PLAN (ITP)
C-43 WEST BASIN STORAGE RESERVOIR
CONTRACT NUMBER: CN XXXXXXXXXX
CIVIL WORKS

Location: Hendry County, FL
Date Prepared:
Revision:
Contractor: **Prepared By:**

PRECAST CONCRETE PILING
Spec. Section: 31 62 13.20

Item No.	Attribute / Activity Description	Acceptance Criteria (Codes, Std., Spec., Drawings, Etc.)	INSPECTION REQUIREMENTS			Forms / Records / References (3)	Comments
			Inspect	Hold (1)	Notify (2)		
1	PRE-CONSTRUCTION						
1.1	Contractor's Quality Control Plan, Site Health & Safety Plan and Permits	Quality Control 01 45 00, Safety Requirements 01 35 26, Permits & Fees 00 31 46	D-L4	D-L4		Plans and Permits	Plans have been submitted by Contractor and approved by the District/PQACT. All pemits have been obtained to begin work.
1.2	Preconstruction Submittals	Submittals 01 33 00 31 62 13.20	D-L4, ER-L4	D-L4, ER-L4		Transmittal 01 45 00.3.10.1. & Appen. C, Submittals 01 45 00.3.10.1. & Appen. C, Submittal Register	All preconstruction submittals for this DFOW shall be submitted by the Contractor and Approved by the District/PQACT.
1.3	Request For Information (RFIs)	Quality Control 01 45 00	D-L4, ER-L4	D-L4, ER-L4		Request for Information & Log 01 45 00.3.10.1 & Appen. C	All RFIs for this DFOW shall be answered in order to clear up any questions before work begins.
1.4	Work Plans	Quality Control 01 45 00	D-L4, ER-L4	D-L4, ER-L4		Plans	All work plans for this DFOW shall be submitted by the Contractor and approved by the District/PQACT.
1.5	Activity Hazard Analysis (AHA)	Safety Requirements 01 35 26	D-L4, ER-L4	D-L4, ER-L4		AHA 01 45 00.3.10.1 & Appen. C	The AHA for this DFOW have been submitted by the Contractor.
1.6	Previous Work Deficiencies & Non-Conformances of previous DFOW	Quality Control 01 45 00	CQC-L5, SDQC-L5, D-L5, ER-L5, MCT-L5	D-L4, ER-L4		Deficiency Logs and NCN Logs 01 45 00.3.10.1 & Appen. C	All deficiencies and non-conformances shall be corrected of previous work in order to avoid covering
1.7	Final Follow-up Control Phase Inspection of previous DFOW	Quality Control 01 45 00	CQC-L5, SDQC-L5, D-L5, ER-L5, MCT-L5	D-L4, ER-L4	48 Hours	Final Follow-up Control Phase Inspection Checklist & Punch-Out	Final Follow-up Control Phase Inspection checklist & punch out items shall be completed of previous work.
1.8	Preparatory Control Phase Inspection	Quality Control 01 45 00	CQC-L5, SDQC-L5, D-L5, ER-L5, MCT-L5	D-L4, ER-L4	48 Hours	Preparatory Control Phase Inspection Worksheet 01 45 00.3.10.1 & Appen. C	Preparatory Control Phase Inspection/Meeing shall be performed successfully without open issues.
1.9	Order List	31 61 13.20, 3.2.2	CQC-L4, SDQC-L4, D-L4, ER-L4	D-L4, ER-L4		Transmittal 01 45 00.3.10.1. & Appen. C, Submittals 01 45 00.3.10.1. & Appen. C, Submittal Register	The Contractor shall submit to the Construction Manager for approval, an itemized list for piles prior to placing the order with the supplier, as specified.
1.10	Wave Equation Analysis of Pile Drivability	31 61 13.20 - 3.2.1	CQC-L4, SDQC-L4, D-L4, ER-L4	D-L4, ER-L4	Prior to driving any pile	Transmittal 01 45 00.3.10.1. & Appen. C, Submittals 01 45 00.3.10.1. & Appen. C, Submittal Register	Prior to driving any pile, the Contractor shall submit a pile Wave Equation Analysis, performed by his Geotechnical Consultant, for each size pile and distinct subsurface profile condition.
1.11	Driving Piles Notification	31 61 13.20 - 3.3.1	CQC-L4, SDQC-L4, D-L4, ER-L4	D-L4, ER-L4	10 days prior to driving of piles	Transmittal 01 45 00.3.10.1. & Appen. C, Submittals 01 45 00.3.10.1. & Appen. C, Submittal Register	Notify Construction Manager 10 days prior to driving of piles .
1.12	Driving Piles	31 61 13.20 - 3.2.1	CQC-L1, SDQC-L1, D-L1, ER-L1	D-L1, ER-L1		Daily Quality Control Report/ Daily Activity Log (DQCR) 01 45 00.3.10.1 & Specifications Appendix C	Piles may be driven when the specified 28-day concrete strength has been achieved but not less than 7 days after casting.
2	CONSTRUCTION						
2.1	Initial Control Phase Inspection	01 45 00, 3.7.2	CQC-L5, SDQC-L5, D-L5, ER-L5,	D-L5, ER-L5	provide agenda > 48 hours prior to meeting	Initial Control Phase Inspection Checklist 01 45 00.3.10.1, & Specifications Appendix C	An Initial Control Phase Inspection shall be performed shortly after the DFOW has begun to determine if the DFOW plan is working and if the workmanship of the workers is satisfactory and meets safety standards.
2.2	Daily Follow-up Control Phase Inspections	01 45 00, 3.7.3	CQC-L1	N/A	N/A	Daily Quality Control Report/ Daily Activity Log (DQCR) 01 45 00.3.10.1 & Specifications Appendix C	Contractor to perform daily Follow-up Control Phase Inspections and document findings on DQCR.
2.3	Pile Hammers	31 61 13.20 - 3.1.1	CQC-L1, SDQC-L1, D-L1, ER-L1	D-L1, ER-L1		Daily Quality Control Report/ Daily Activity Log (DQCR) 01 45 00.3.10.1 & Specifications Appendix C	At final driving, operate pile hammer in accordance with Manufacturer's recommendation for driving either end bearing piles or friction piles.
2.4	Pile Hammers	31 61 13.20 - 3.1.1	CQC-L1, SDQC-L1, D-L1, ER-L1	D-L1, ER-L1		Daily Quality Control Report/ Daily Activity Log (DQCR) 01 45 00.3.10.1 & Specifications Appendix C	At final driving, operate diesel powered hammers at rate recommended by Manufacturer for hard driving. Maintain pressure at steam or air hammer
2.5	Driving Helmets or Caps and Pile Cushions	31 61 13.20 - 3.1.2.1	CQC-L1, SDQC-L1, D-L1, ER-L1	D-L1, ER-L1		Daily Quality Control Report/ Daily Activity Log (DQCR) 01 45 00.3.10.1 & Specifications Appendix C	Use a steel driving helmet or cap including a pile cushion between top of pile and driving helmet or cap to prevent impact damage to pile.

2.6	Hammer Cushion or Capblock	31 61 13.20 - 3.1.2.2	CQC-L1, SDQC-L1, D-L1, ER-L1	D-L1, ER-L1		Daily Quality Control Report/ Daily Activity Log (DQCR) 01 45 00.3.10.1 & Specifications Appendix C	Use a hammer cushion or capblock between driving helmet or cap and hammer ram consisting of a solid hardwood block with grain parallel to the pile axis and enclosed in a close-fitting steel housing.
2.7	Pile Length Markings	31 61 13.20 - 3.2.3	CQC-L1, SDQC-L1, D-L1, ER-L1	D-L1, ER-L1		Daily Quality Control Report/ Daily Activity Log (DQCR) 01 45 00.3.10.1 & Specifications Appendix C	The Contractor shall mark each pile prior to driving with horizontal line at one foot intervals, and the number of feet from pile tip at 5 foot intervals.
2.8	Driving Piles	31 61 13.20 - 3.3.1	CQC-L1, SDQC-L1, D-L1, ER-L1	D-L1, ER-L1		Daily Quality Control Report/ Daily Activity Log (DQCR) 01 45 00.3.10.1 & Specifications Appendix C	The minimum tip elevation for concretepiles used to support the Stilling Well Platform shall be -30 feet NAVD.
2.9	Tolerances in Driving	31 61 13.20 - 3.3.3	CQC-L1, SDQC-L1, D-L1, ER-L1	D-L1, ER-L1		Daily Quality Control Report/ Daily Activity Log (DQCR) 01 45 00.3.10.1 & Specifications Appendix C	Drive piles with a variation of not more than 2 percent from vertical for plumb piles or more than 4 percent from required angle for batter piles. Place butts within 4 inches of location indicated .In addition to specified tolerances, maintain a location to provide a clear distance of at least 5 inches from butt to edge of pile cap. If clear distance cannot be maintained, then notify Construction Manager.
2.10	Build-Ups	31 61 13.20 - 3.3.7	CQC-L1, SDQC-L1, D-L1, ER-L1	D-L1, ER-L1		Daily Quality Control Report/ Daily Activity Log (DQCR) 01 45 00.3.10.1 & Specifications Appendix C	Concrete in build-up shall have a minimum compressive strength of 4500 psi. Build-ups will not be permitted on more than 25 percent of total number of piles.
2.11	Pile Records	31 61 13.20 - 3.4.1	CQC-L4, SDQC-L4, D-L4, ER-L4	D-L4, ER-L4		Daily Quality Control Report/ Daily Activity Log (DQCR) 01 45 00.3.10.1 & Specifications Appendix C	Keep a complete and accurate record of each pile driven as specified
3	**ACCEPTANCE**						
3.1	Deficiencies & Non-Conformances of this DFOW	Quality Control 01 45 00	CQC-5, SDQC-5, D-5, ER-5, MCT-5	D-L5, ER-L4		Deficiency Logs and NCN Logs 01 45 00.3.10.1 & Appendix C	All deficiencies and non-conformances have been corrected of work in order to avoid covering deficiencies.
3.2	Final Follow-up Control Phase Inspection	01 45 00, 3.9.3	CQC-L5, D-L5, ER-L5,	D-L5, ER-L5	provide agenda > 48 hours prior to meeting	Final Follow-up Control Phase Inspection Checklist & Punch-Out 01 45 00.3.10.1 & Specifications Appendix C	Final Follow-up Control Phase Inspection checklist & punch out items have been completed.

(1): A HOLD POINT is a mandatory requirement - advance notification and acceptance (verbal/written) is required prior to continuing work.

(2): A NOTIFY POINT requires advance notification prior to performing the activity.

(3): The DISTRICT/PQACT inspection form / checklist is to be completed by the Contractor and member of the District/PQACT prior to the start of work. The inspection form/ checklist shall show no incompletions.

LEVEL 1 = CONTINUOUS INSPECTION OF ACTIVITIES, LEVEL 2 = MONITOR CRITICAL ACTIVITIES AND WITNESS TESTING, LEVEL 3 = RANDOM INSPECTION AND/OR AT COMPLETION OF WORK, LEVEL 4 = REVIEW OF PRECONSTRUCTION DOCUMENTATION, LEVEL 5 - REVIEW OF FINAL DOCUMENTS

CQC = CONTRACTOR QUALITY CONTROL SDQC = SPECIALIZED DISCIPLINE D = DISTRICT/PQACT ER = ENGINEER OF RECORD MCT = MANUFACTURER CERTIFICATION/TESTING

Approved By District/PQACT QA Manager: *DRoy Moseley* ***Date:*** *31July2018*

INSPECTION / TEST PLAN (ITP)
C-43 WEST BASIN STORAGE RESERVOIR
CONTRACT NUMBER: CN XXXXXXXXXX
CIVIL WORKS

Location: Hendry County, FL
Date Prepared:
Revision:
Contractor: **Prepared By:**

HVAC EQUIPMENT SYSTEM INSTALLATION
Spec. Section: 23 09 13, 23 00 00, 23 05 48.00 40, 23 05 93

Item No.	Attribute / Activity Description	Acceptance Criteria (Codes, Std., Spec., Drawings, Etc.)	INSPECTION REQUIREMENTS			Forms / Records / References (3)	Comments
			Inspect	Hold (1)	Notify (2)		
1	PRE-CONSTUCTION						
1.1	Contractor's Quality Control Plan, Site Health & Safety Plan and Permits	Quality Control 01 45 00, Safety Requirements 01 35 26, Permits & Fees 00 31 46	D-L4	D-L4		Plans and Permits	Plans have been submitted by Contractor and approved by the District/PQACT. All pemits have been obtained to begin work.
1.2	Preconstruction Submittals	Submittals 01 33 00 23 09 13, 23 00 00, 23 05 48.00 40, 23 05 93	D-L4, ER-L4	D-L4, ER-L4		Transmittal 01 45 00.3.10.1. & Appen. C, Submittals 01 45 00.3.10.1. & Appen. C, Submittal Register	All preconstruction submittals for this DFOW shall be submitted by the Contractor and Approved by the District/PQACT.
1.3	Request For Information (RFIs)	Quality Control 01 45 00	D-L4, ER-L4	D-L4, ER-L4		Request for Information & Log 01 45 00.3.10.1 & Appen. C	All RFIs for this DFOW shall be answered in order to clear up any questions before work begins.
1.4	Work Plans	Quality Control 01 45 00	D-L4, ER-L4	D-L4, ER-L4		Plans	All work plans for this DFOW shall be submitted by the Contractor and approved by the District/PQACT.
1.5	Activity Hazard Analysis (AHA)	Safety Requirements 01 35 26	D-L4, ER-L4	D-L4, ER-L4		AHA 01 45 00.3.10.1 & Appen. C	The AHA for this DFOW have been submitted by the Contractor.
1.6	Previous Work Deficiencies & Non-Conformances of previous DFOW	Quality Control 01 45 00	CQC-L5, SDQC-L5, D-L5, ER-L5, MCT-L5	D-L4, ER-L4		Deficiency Logs and NCN Logs 01 45 00.3.10.1 & Appen. C	All deficiencies and non-conformances shall be corrected of previous work in order to avoid covering deficiencies.
1.7	Final Follow-up Control Phase Inspection of previous DFOW	Quality Control 01 45 00	CQC-L5, SDQC-L5, D-L5, ER-L5, MCT-L5	D-L4, ER-L4	48 Hours	Final Follow-up Control Phase Inspection Checklist & Punch-Out	Final Follow-up Control Phase Inspection checklist & punch out items shall be completed of previous work.
1.8	Preparatory Control Phase Inspection	Quality Control 01 45 00	CQC-L5, SDQC-L5, D-L5, ER-L5, MCT-L5	D-L4, ER-L4	48 Hours	Preparatory Control Phase Inspection Worksheet 01 45 00.3.10.1 & Appen. C	Preparatory Control Phase Inspection/Meeing shall be performed successfully without open issues.
1.9	DELIVERY, STORAGE, AND HANDLING	23 09 13, 1.6	CQC-L1, SDQC-L1, D-L1, ER-L1, MCT-L1	D-L1, ER-L1		Daily Quality Control Report/ Daily Activity Log (DQCR) 01 45 00.3.10.1 & Appen. C	The system control products shall be stored and handled per manufacturer's recommendations.
1.10	WARRANTY	23 09 13, 1.8 and 23 05 93, 1.7	CQC-L1, SDQC-L1, D-L1, ER-L1, MCT-L1	D-L1, ER-L1		Daily Quality Control Report/ Daily Activity Log (DQCR) 01 45 00.3.10.1 & Appen. C	The warranty shall meet the requirements specified in SECTION 01 61 03 EQUIPMENT AND MATERIALS.
2	CONSTRUCTION						
2.1	Initial Control Phase Inspection	01 45 00	CQC-L5, SDQC-L5, D-L5, ER-L5, MCT-L5	D-L4, ER-L4	48 Hours	Initial Control Phase Inspection Agenda 01 45 00.1.10.1.13, Initial Control Phase Inspection Checklist	An Initial Control Phase Inspection shall be performed shortly after the DFOW has begun to determine if the DFOW plan is working and if the workmanship of the
2.2	Daily Follow-up Control Phase Inspections	01 45 00	CQC-L1			Daily Quality Control Report/ Daily Activity Log (DQCR) 01 45 00.3.10.1 & Appen. C	Contractor to perform daily Follow-up Control Phase Inspections and document findings on DQCR.
2.3	EXAMINATION	23 09 13, 3.1	CQC-L1, SDQC-L1, D-L1, ER-L1, MCT-L1	D-L1, ER-L1		Daily Quality Control Report/ Daily Activity Log (DQCR) 01 45 00.3.10.1 & Appen. C	Examine and verify that Work is in condition to receive installation specified in this Section. Take measurements and verify dimensions to ascertain fit of installation.
2.4	EXAMINATION	23 09 13, 3.1	CQC-L1, SDQC-L1, D-L1, ER-L1, MCT-L1	D-L1, ER-L1		Daily Quality Control Report/ Daily Activity Log (DQCR) 01 45 00.3.10.1 & Appen. C	Ascertain structural sufficiency to support installation. Ascertain that supports and openings are correctly located; cut new openings where required.
2.5	EXAMINATION	23 09 13, 3.1	CQC-L1, SDQC-L1, D-L1, ER-L1, MCT-L1	D-L1, ER-L1		Transmittal 01 45 00.3.10.1. & Appen. C, Submittals 01 45 00.3.10.1. & Appen. C, Submittal Register	Submit details of proposed cutting and patching.

2.6	FIELD QUALITY CONTROL	23 09 13, 3.4	CQC-L1, SDQC-L1, D-L1, ER-L1, MCT-L1	D-L1, ER-L1		Daily Quality Control Report/ Daily Activity Log (DQCR) 01 45 00.3.10.1 & Appen. C	Test each control system and provide written, signed, and dated test report.
2.7	FIELD QUALITY CONTROL	23 09 13, 3.4	CQC-L1, SDQC-L1, D-L1, ER-L1, MCT-L1	D-L1, ER-L1		Daily Quality Control Report/ Daily Activity Log (DQCR) 01 45 00.3.10.1 & Appen. C	Test individual control components and accessories to comply with the Specifications. Test functions of each control system as a complete system to comply with the Specifications.
2.8	FIELD QUALITY CONTROL	23 09 13, 3.4	CQC-L1, SDQC-L1, D-L1, ER-L1, MCT-L1	D-L1, ER-L1		Daily Quality Control Report/ Daily Activity Log (DQCR) 01 45 00.3.10.1 & Appen. C	Test each control component and system as part of HVAC system testing, adjusting, and balancing as specified in Section 23 05 93 TESTING, ADJUSTING AND BALANCING FOR HVAC.
2.9	EXAMINATION	23 00 00, 3.1	CQC-L1, SDQC-L1, D-L1, ER-L1, MCT-L1	D-L1, ER-L1		Daily Quality Control Report/ Daily Activity Log (DQCR) 01 45 00.3.10.1 & Appen. C	After becoming familiar with all details of the Work, verify all dimensions in the field, and advise the Construction Manager of any discrepancy before performing the Work.
2.10	EQUIPMENT PADS	23 00 00, 3.3	CQC-L1, SDQC-L1, D-L1, ER-L1, MCT-L1	D-L1, ER-L1		Daily Quality Control Report/ Daily Activity Log (DQCR) 01 45 00.3.10.1 & Appen. C	Allow equipment bases and foundations, when constructed of concrete or grout, to cure a minimum of 28 calendar days before being loaded.
2.11	DUCTWORK LEAK TESTS --Section 23 05 93	23 00 00, 3.9	CQC-L2, SDQC-L2, D-L2, ER-L2, MCT-L2	D-L2, ER-L2	48 Hours	Daily Quality Control Report/ Daily Activity Log (DQCR) 01 45 00.3.10.1 & Appen. C	Submit the proposed schedule, at least 2 weeks prior to the start of test. Perform test as specified.
2.12	DAMPER ACCEPTANCE TEST	23 00 00, 3.10	CQC-L2, SDQC-L2, D-L2, ER-L2, MCT-L2	D-L2, ER-L2	48 Hours	Transmittal 01 45 00.3.10.1. & Appen. C, Submittals 01 45 00.3.10.1. & Appen. C, Submittal Register	Submit the proposed schedule, at least 2 weeks prior to the start of test.
2.13	TESTING, ADJUSTING, AND BALANCING --Section 23 05 93	23 00 00, 3.11	CQC-L2, SDQC-L2, D-L2, ER-L2, MCT-L2	D-L2, ER-L2	48 Hours	Daily Quality Control Report/ Daily Activity Log (DQCR) 01 45 00.3.10.1 & Appen. C	Begin testing, adjusting, and balancing only when the air supply and distribution, including controls, has been completed, with the exception of performance tests.
2.14	PERFORMANCE TESTS	23 00 00, 3.12	CQC-L2, SDQC-L2, D-L2, ER-L2, MCT-L2	D-L2, ER-L2	48 Hours	Daily Quality Control Report/ Daily Activity Log (DQCR) 01 45 00.3.10.1 & Appen. C	After testing, adjusting, and balancing is complete as specified, test each system as a whole to see that all items perform as integral parts of the system and temperatures and conditions are evenly controlled throughout the building.
2.15	PERFORMANCE TESTS	23 00 00, 3.12	CQC-L2, SDQC-L2, D-L2, ER-L2, MCT-L2	D-L2, ER-L2	48 Hours	Transmittal 01 45 00.3.10.1. & Appen. C, Submittals 01 45 00.3.10.1. & Appen. C, Submittal Register	Submit test reports for the ductwork leak test, and performance tests in booklet form, upon completion of testing. Document phases of tests performed including initial test summary, repairs/adjustments made, and final test results in the reports.
2.16	QUALITY REQUIREMENTS	23 05 48.00 40, 1.4	CQC-L2, SDQC-L2, D-L2, ER-L2, MCT-L2	D-L2, ER-L2		Daily Quality Control Report/ Daily Activity Log (DQCR) 01 45 00.3.10.1 & Appen. C	Ensure all vibration-control apparatus is the product of a single manufacturing source, where possible. Human exposure levels should be considered using ASA S2.71 and NEBB PROCEDURAL STANDARDS.
2.17	Advance Notice of Pre-Final DALT Field Work Advance Notice of Pre-Final DALT Field Work	23 05 93, 3.2.2	CQC-L2, SDQC-L2, D-L2, ER-L2, MCT-L2	D-L2, ER-L2	prior to the COTR's duct selection field visit	Daily Quality Control Report/ Daily Activity Log (DQCR) 01 45 00.3.10.1 & Appen. C	On completion of the installation of each duct system indicated to be DALT'd, notify the Construction Manager in writing prior to the COTR's duct selection field visit.
2.18	EXECUTION	23 05 93, 3.1	CQC-L2, SDQC-L2, D-L2, ER-L2, MCT-L2	D-L2, ER-L2		Daily Quality Control Report/ Daily Activity Log (DQCR) 01 45 00.3.10.1 & Appen. C	Comply with requirements of this section as specified in Appendix A WORK DESCRIPTIONS OF PARTICIPANTS.
2.19	Instruments, Consumables and Personnel	23 05 93, 3.2.1	CQC-L2, SDQC-L2, D-L2, ER-L2, MCT-L2	D-L2, ER-L2		Daily Quality Control Report/ Daily Activity Log (DQCR) 01 45 00.3.10.1 & Appen. C	Follow the same basic procedure specified below for TAB Field Work, including maintenance and calibration of instruments, accuracy of measurements, preliminary procedures, field work, workmanship and treatment of deficiencies. Calibrate and maintain instruments in accordance with Manufacturer's written procedures.
2.20	DALT Testing	23 05 93, 3.2.4	CQC-L2, SDQC-L2, D-L2, ER-L2, MCT-L2	D-L2, ER-L2		Daily Quality Control Report/ Daily Activity Log (DQCR) 01 45 00.3.10.1 & Appen. C	Perform DALT on the HVAC duct sections of each system as selected by the COTR. Use the duct class, seal class, leakage class and the leak test pressure data indicated on the drawings, to comply with the procedures specified in SMACNA 1972 CD.
2.21	DALT Testing	23 05 93, 3.2.4	CQC-L2, SDQC-L2, D-L2, ER-L2, MCT-L2	D-L2, ER-L2		Daily Quality Control Report/ Daily Activity Log (DQCR) 01 45 00.3.10.1 & Appen. C	In spite of specifications of SMACNA 1972 CD to the contrary, DALT ductwork of construction class of 3-inch water gauge static pressure and below if indicated to be DALT'd.

2.22	DALT Testing	23 05 93, 3.2.4	CQC-L2, SDQC-L2, D-L2, ER-L2, MCT-L2	D-L2, ER-L2		Daily Quality Control Report/ Daily Activity Log (DQCR) 01 45 00.3.10.1 & Appen. C	Complete DALT work on the COTR selected ductwork within 48 hours after the particular ductwork was selected for DALT. Separately conduct DALT work for large duct systems to enable the DALT work to be completed in 48 hours.
2.23	Quality Requirements - COTR DALT Field Acceptance Testing	23 05 93, 3.2.6	CQC-L2, SDQC-L2, D-L2, ER-L2, MCT-L2	D-L2, ER-L2		Daily Quality Control Report/ Daily Activity Log (DQCR) 01 45 00.3.10.1 & Appen. C	In the presence of the COTR and TAB team field leader, verify for accuracy Pre-final DALT Report data selected by the COTR. For each duct system, this acceptance testing shall be conducted on a maximum of 50 percent of the duct sections DALT'd.
2.24	Quality Requirements - COTR DALT Field Acceptance Testing	23 05 93, 3.2.6	CQC-L2, SDQC-L2, D-L2, ER-L2, MCT-L2	D-L2, ER-L2		Daily Quality Control Report/ Daily Activity Log (DQCR) 01 45 00.3.10.1 & Appen. C	Further, if any data on the Pre-final DALT report form for a given duct section is out-of-tolerance, then field acceptance testing shall be conducted on data for one additional duct section, preferably in the same duct system, in the presence of the COTR.
2.25	Additional COTR Field Acceptance Testing	23 05 93, 3.2.7	CQC-L2, SDQC-L2, D-L2, ER-L2, MCT-L2	D-L2, ER-L2		Daily Quality Control Report/ Daily Activity Log (DQCR) 01 45 00.3.10.1 & Appen. C	If any of the duct sections checked for a given system are determined to have a leakage rate measured that exceeds the leakage rate allowed by SMACNA Leak Test Manual for an indicated duct construction class and sealant class, terminate data checking for that section. The associated Pre-final DALT Report data for the given duct system will be disapproved.
2.26	Additional COTR Field Acceptance Testing	23 05 93, 3.2.7	CQC-L2, SDQC-L2, D-L2, ER-L2, MCT-L2	D-L2, ER-L2		Daily Quality Control Report/ Daily Activity Log (DQCR) 01 45 00.3.10.1 & Appen. C	Make the necessary corrections and prepare a revised Pre-final DALT Report. Reschedule a field check of the revised report data with the COTR.
2.27	Certified Final DALT Report	23 05 93, 3.2.8	CQC-L5, D-L5, ER-L5	D-L5, ER-L5		Transmittal 01 45 00.3.10.1. & Appen. C, Submittals 01 45 00.3.10.1. & Appen. C, Submittal Register	On successful completion of all field checks of the Pre final DALT Report data for all systems, the TAB Supervisor is to assemble, review, certify and submit the Final DALT Report to the Construction Manager for approval.
2.28	Certified Final DALT Report	23 05 93, 3.2.8	CQC-L5, D-L5, ER-L5	D-L5, ER-L5		Transmittal 01 45 00.3.10.1. & Appen. C, Submittals 01 45 00.3.10.1. & Appen. C, Submittal Register	On successful completion of all field checks of the Pre-Final DALT Report data for all systems, the TAB Supervisor shall assemble, review, approve, sign and submit the Final DALT Report in compliance with Appendix B REPORTS - DALT and TAB to the Construction Manager for approval.
2.29	Prerequisite for TAB Field Work	23 05 93, 3.2.9	CQC-L2, SDQC-L2, D-L2, ER-L2, MCT-L2	D-L2, ER-L2	prior to the completion and approval	Daily Quality Control Report/ Daily Activity Log (DQCR) 01 45 00.3.10.1 & Appen. C	Do not commence TAB field work prior to the completion and approval, for all systems, of the Final DALT Report.
2.30	TAB Field Work	23 05 93, 3.3.1	CQC-L2, SDQC-L2, D-L2, ER-L2, MCT-L2	D-L2, ER-L2		Daily Quality Control Report/ Daily Activity Log (DQCR) 01 45 00.3.10.1 & Appen. C	Test, adjust, and balance the HVAC systems until measured flow rates (air and water flow) are within plus or minus 5 percent of the design flow rates as specified or indicated on the contract documents.
3	**ACCEPTANCE**						
3.1	Operation and Maintenance Manuals	23 09 13, 3.4.1	CQC-L5, D-L5, ER-L5	D-L5, ER-L5		Transmittal 01 45 00.3.10.1. & Appen. C, Submittals 01 45 00.3.10.1. & Appen. C, Submittal Register	Submit six manuals at least 2 weeks prior to field training. Submit data complying with the requirements specified in Section 01 78 05 OPERATION AND MAINTENANCE INFORMATION. Submit Data Package 3 for the items/units listed under SD-10 Operation and Maintenance Data.
3.2	Operation and Maintenance Training	23 09 13, 3.4.2	CQC-L5, D-L5, ER-L5	D-L5, ER-L5		Transmittal 01 45 00.3.10.1. & Appen. C, Submittals 01 45 00.3.10.1. & Appen. C, Submittal Register	Conduct a training course for the members of the operating staff as designated by the District, as specified.

3.3	COMMISSIONING	23 09 13,	CQC-L5, D-L5, ER-L5	D-L5, ER-L5	During Commisioning	Transmittal 01 45 00.3.10.1. & Appen. C, Submittals 01 45 00.3.10.1. & Appen. C, Submittal Register	As specified in Section 01 91 00 COMMISSIONING and this Section. 2. Manufacturer(each) services for each type of strainer: a. Provide Manufacturer's Certificate of Source Testing. b. Provide Manufacturer's Certificate of Installation and Functionality Compliance. c. Training and other on-site services.
3.4	Operation and Maintenance Manuals	23 00 00, 3.14.1	CQC-L5, D-L5, ER-L5	D-L5, ER-L5		Transmittal 01 45 00.3.10.1. & Appen. C, Submittals 01 45 00.3.10.1. & Appen. C, Submittal Register	Submit six manuals at least 2 weeks prior to field training. Submit data complying with the requirements specified in Section 01 78 05 OPERATION AND MAINTENANCE INFORMATION. Submit Data Package 3 for the items/units listed under SD-10 Operation and Maintenance Data.
3.5	Operation And Maintenance Training	23 00 00, 3.14.2	CQC-L5, D-L5, ER-L5	D-L5, ER-L5		Transmittal 01 45 00.3.10.1. & Appen. C, Submittals 01 45 00.3.10.1. & Appen. C, Submittal Register	Conduct a training course for the members of the operating staff as designated by the District, as specified.
3.6	TESTS, INSPECTIONS, AND VERIFICATIONS	23 05 48.00 40, 2.4	CQC-L5, D-L5, ER-L5	D-L5, ER-L5		Transmittal 01 45 00.3.10.1. & Appen. C, Submittals 01 45 00.3.10.1. & Appen. C, Submittal Register	Submit test reports for testing vibration isolation for each type of isolator and each type of base. Meet referenced standards contained within this section. Include in test reports allowable deflection and measured deflection also meeting referenced standards within this section.
3.7	FIELD QUALITY CONTROL	23 05 48.00 40, 3.2.1	CQC-L5, D-L5, ER-L5	D-L5, ER-L5		Transmittal 01 45 00.3.10.1. & Appen. C, Submittals 01 45 00.3.10.1. & Appen. C, Submittal Register	Ensure vibration-isolation devices are deflection tested. Submit test reports substantiating that all equipment has been isolated as specified and that minimum specified deflections have been met. Make all measurements in the presence of the Construction Manager.
3.8	Prerequisite for Approval	23 05 93, 3.3.8.3	CQC-L5, D-L5, ER-L5	D-L5, ER-L5		Transmittal 01 45 00.3.10.1. & Appen. C, Submittals 01 45 00.3.10.1. & Appen. C, Submittal Register	Compliance with the field acceptance testing requirements of this section is a prerequisite for the final Construction Manager approval of the TAB Report submitted.
3.9	Deficiencies & Non-Conformances of this DFOW	01 45 00	CQC-5, D-5, ER-5,			Deficiency Logs and NCN Logs 01 45 00.3.10.1 & Appen. C	All deficiencies and non-conformances have been corrected of work in order to avoid covering deficiencies.
3.10	Final Follow-up Control Phase Inspection	01 45 00	CQC-L5, D-L5, ER-L5	D-L5, ER-L5	48 Hours	Final Follow-up Control Phase Inspection Checklist & Punch-Out	Final Follow-up Control Phase Inspection checklist & punch out items have been completed.

(1): A HOLD POINT is a mandatory requirement - advance notification and acceptance (verbal/written) is required prior to continuing work.

(2): A NOTIFY POINT requires advance notification prior to performing the activity.

(3): The DISTRICT/PQACT inspection form / checklist is to be completed by the Contractor and member of the District/PQACT prior to the start of work. The inspection form/ checklist shall show no incompletions.

LEVEL 1 = CONTINUOUS INSPECTION OF ACTIVITIES, LEVEL 2 = MONITOR CRITICAL ACTIVITIES AND WITNESS TESTING, LEVEL 3 = RANDOM INSPECTION AND/OR AT COMPLETION OF WORK, LEVEL 4 = REVIEW OF PRECONSTRUCTION DOCUMENTATION, LEVEL 5 - REVIEW OF FINAL DOCUMENTS

CQC = CONTRACTOR QUALITY CONTROL SDQC = SPECIALIZED DISCIPLINE D = DISTRICT/PQACT ER = ENGINEER OF RECORD MCT = MANUFACTURER CERTIFICATION/TESTING

Approved By District/PQACT QA Manager: *DRoy Moseley* ***Date:*** *28July2018*

INSPECTION / TEST PLAN (ITP)
C-43 WEST BASIN STORAGE RESERVOIR
CONTRACT NUMBER: CN XXXXXXXXXXX
CIVIL WORKS

Location: Hendry County, FL
Date Prepared:
Revision:
Contractor: **Prepared By:**

VERTICAL LIFT GATES
Spec. Section: 35 20 16.53, 35 01 70.13, 05 50 14, 40 05 57.23

Item No.	Attribute / Activity Description	Acceptance Criteria (Codes, Std., Spec., Drawings, Etc.)	INSPECTION REQUIREMENTS			Forms / Records / References (3)	Comments
			Inspect	Hold (1)	Notify (2)		
1	PRE-CONSTRUCTION						
1.1	Preparatory Control Phase Inspection	01 45 00	CQC-L4, SQDC-L4, D-L4, ER-L4	D-L4, ER-L4	provide agenda > 48 hours prior to meeting	Preparatory Control Phase Inspection Worksheet 01 45 00.3.10.1 & Attachment C	Preparatory Control Phase Inspection/Meeting has been performed successfully without open issues.
1.2	VERTICAL LIFT GATES - All Pre-Construction Submittals	35 20 16.53, 35 01 70.13, 05 50 14, 40 05 57.23	CQC-L4, SQDC-L4, D-L4, ER-L4			Transmittal 01 45 00.3.10.1. & Appen. C, Submittals 01 45 00.3.10.1. & Appen. C, D Submittal Register	All Pre-Construction submittals for this DFOW shall be submitted by the Contractor and approved by the District/PQACT prior to the commencement of the Work
1.3	WIRE ROPE FOR GATE OPERATING DEVICES - Inspection on Delivery	35 01 70.13 - 1.5.2	CQC-L1, SQDC-L1, D-L1, ER-L1	D-L1, ER-L1		Preparatory Control Phase Inspection Worksheet 01 45 00.3.10.1 & Attachment C	Upon delivery to the work or storage area, inspect the wire ropes in the presence of the District. Inspect the wire rope for dings, kinks or other damage. Unreel the wire ropes from spool to spool to allow complete inspection of the wire ropes over their entire length. Perform the unreeling/reeling operation, and furnish extra spools or any other equipment required.
1.4	WIRE ROPE FOR GATE OPERATING DEVICES - Inspection on Delivery	35 01 70.13 - 1.5.2	CQC-L1, SQDC-L1, D-L1, ER-L1	D-L1, ER-L1		Preparatory Control Phase Inspection Worksheet 01 45 00.3.10.1 & Attachment C	Upon completion of the inspection, furnish the Contracting Officer with a written report of the results.
1.5	Storage	35 01 70.13 - 1.5.3	CQC-L1, SQDC-L1, D-L1, ER-L1	D-L1, ER-L1		Preparatory Control Phase Inspection Worksheet 01 45 00.3.10.1 & Attachment C	After delivery, store the wire ropes in well ventilated enclosures in the storage area and protect from the elements.
1.6	ROLLER GATES - DELIVERY, STORAGE, AND HANDLING	35 20 16.53, 1.6	CQC-L1, SQDC-L1, D-L1, ER-L1	D-L1, ER-L1		Preparatory Control Phase Inspection Worksheet 01 45 00.3.10.1 & Attachment C	Perform delivery, handling, and storage of materials and fabricated items conforming to the requirements specified and in Section 05 50 14 STRUCTURAL METAL FABRICATIONS.
1.7	ROLLER GATES - DELIVERY, STORAGE, AND HANDLING	35 20 16.53,	CQC-L1, SQDC-L1, D-L1, ER-L1	D-L1, ER-L1		Preparatory Control Phase Inspection Worksheet 01 45 00.3.10.1 & Attachment C	Unload materials and equipment delivered to the site by the District. Verify the condition and quantity of the items delivered by the District and acknowledge receipt and condition thereof in writing. If delivered items are damaged or a shortage is determined, notify of such in writing within 24 hours after delivery.
1.8	Shop Assembly and Tests	35 20 16.53, 2.4.9.3	D-L3, ER-L3			Transmittal 01 45 00.3.10.1. & Appen. C, Submittals 01 45 00.3.10.1. & Appen. C, D Submittal Register	All shop assemblies and tests will be witnessed by the District, unless specifically waived in writing. Copies of all shop test/inspection records shall be furnished to the District.
1.9	Operating Machinery	35 20 16.53, 3.1.4	CQC-L1, SQDC-L1, D-L1, ER-L1	D-L1, ER-L1		Preparatory Control Phase Inspection Worksheet 01 45 00.3.10.1 & Attachment C	Operating machinery and components shall be aligned to within 0.030 inch of the reference point.
1.10	ELECTRIC ACTUATORS - WARRANTY	40 05 57.23 - 1.6	CQC-L5, SDQC-L5, D-L5, ER-L5,	D-L5, ER-L5		Transmittal 01 45 00.3.10.1. & Appen. C, Submittals 01 45 00.3.10.1. & Appen. C, D Submittal Register	The warranty shall meet the requirements specified in Section 01 61 03 EQUIPMENT AND MATERIALS
2	CONSTRUCTION						
2.1	Initial Control Phase Inspection	01 45 00, 3.7.2	CQC-L5, SDQC-L5, D-L5, ER-L5,	D-L5, ER-L5	provide agenda > 48 hours prior to meeting	Initial Control Phase Inspection Checklist 01 45 00.3.10.1, & Specifications Appendix C	An Initial Control Phase Inspection shall be performed shortly after the DFOW has begun to determine if the DFOW plan is working and if the workmanship of the workers is satisfactory and meets safety standards.
2.2	Daily Follow-up Control Phase Inspections	01 45 00, 3.7.3	CQC-L1	N/A	N/A	Daily Quality Control Report/ Daily Activity Log (DQCR) 01 45 00.3.10.1 & Specifications Appendix C	Contractor to perform daily Follow-up Control Phase Inspections and document findings on DQCR.
2.3	VERTICAL LIFT GATES - WORKMANSHIP	05 50 14 -	CQC-L1, SDQC-L1, D-L1, ER-L1	D-L1, ER-L1		Daily Quality Control Report/ Daily Activity Log (DQCR) 01 45 00.3.10.1 & Specifications Appendix C	Workmanship must be of the highest grade and in accordance with the best modern practices to conform to the specifications for the item of work being furnished.

2.4	Production Welding	05 50 14 - 3.2.2	CQC-L5, SDQC-L5, D-L5, ER-L5,	D-L5, ER-L5		Daily Quality Control Report/ Daily Activity Log (DQCR) 01 45 00.3.10.1 & Specifications Appendix C	Perform production welding conforming to the requirements of AWS D1.1/D1.1M or AWS D1.2/D1.2M, as applicable.
2.5	Production Welding	05 50 14 - 3.2.2	CQC-L5, SDQC-L5, D-L5, ER-L5,	D-L5, ER-L5		Daily Quality Control Report/ Daily Activity Log (DQCR) 01 45 00.3.10.1 & Specifications Appendix C	Studs, on which pre-production testing is to be performed, must be welded in the same general position as required on production items (flat, vertical, overhead or sloping).
2.6	Production Welding	05 50 14 - 3.2.2	CQC-L5, SDQC-L5, D-L5, ER-L5,	D-L5, ER-L5		Daily Quality Control Report/ Daily Activity Log (DQCR) 01 45 00.3.10.1 & Specifications Appendix C	Test and production stud welding will be subjected to visual examination or inspection.
2.7	Production Welding	05 50 14 - 3.2.2	CQC-L5, SDQC-L5, D-L5, ER-L5,	D-L5, ER-L5		Daily Quality Control Report/ Daily Activity Log (DQCR) 01 45 00.3.10.1 & Specifications Appendix C	If the reduction of the length of studs becomes less than normal as they are welded, stop welding immediately and do not resume until the cause has been corrected.
2.8	Machined Surfaces	05 50 14 - 3.3.1	CQC-L1, SDQC-L1, D-L1, ER-L1	D-L1, ER-L1		Daily Quality Control Report/ Daily Activity Log (DQCR) 01 45 00.3.10.1 & Specifications Appendix C	Paint finished surfaces of metals which will be exposed after installation, except corrosion resisting steel or nonferrous metals as specified in Section 09 06 90
2.9	Lubrication After Assembly	05 50 14 - 3.3.2	CQC-L1, SDQC-L1, D-L1, ER-L1	D-L1, ER-L1		Daily Quality Control Report/ Daily Activity Log (DQCR) 01 45 00.3.10.1 & Specifications Appendix C	After assembly fill all lubricating systems with the appropriate lubricant and apply additional lubricant at intervals as required to maintain the equipment in satisfactory condition until acceptance of the work.
2.10	QA Inspections	35 01 70.13 - 3.1.1	D-L2, ER-L2	D-L2, ER-L2		Preparatory Control Phase Inspection Worksheet 01 45 00.3.10.1 & Attachment C	Up to two representatives of the District will be present to witness the various manufacturing processes for the wire rope. At a minimum, a site visit will be made to witness the tension test, and the wire rope will be
2.11	Verify Dimensions	35 01 70.13 - 3.1.2	CQC-L1, SDQC-L1, D-L1, ER-L1	D-L1, ER-L1		Daily Quality Control Report/ Daily Activity Log (DQCR) 01 45 00.3.10.1 & Specifications Appendix C	After becoming familiar with the details of the work, verify dimensions in the field, and immediately advise the DISTRICT of any discrepancies before performing any work.
2.12	CLEAN DRUMS AND SHEAVES	35 01 70.13 - 3.3	CQC-L1, SDQC-L1, D-L1, ER-L1	D-L1, ER-L1		Daily Quality Control Report/ Daily Activity Log (DQCR) 01 45 00.3.10.1 & Specifications Appendix C	Clean all drum and sheave grooves with a power wire brush, and inspect them for wear, abrasion, corrosion or other roughness and verify their dimensions are suitable for the new wire rope. Immediately advise the DISTRICT of any problems.
2.13	FIELD TENSIONING MULTI-LINE HOISTS	35 01 70.13 - 3.6	CQC-L5, SDQC-L5, D-L5, ER-L5,	D-L5, ER-L5		Daily Quality Control Report/ Daily Activity Log (DQCR) 01 45 00.3.10.1 & Specifications Appendix C	Adjust the wire rope tension of multi-line hoists to ensure that they share load equally. Submit the proposed field tensioning method in the work plan.
2.14	FIELD TENSIONING MULTI-LINE HOISTS	35 01 70.13 - 3.6	CQC-L1, SDQC-L1, D-L1, ER-L1	D-L1, ER-L1		Daily Quality Control Report/ Daily Activity Log (DQCR) 01 45 00.3.10.1 & Specifications Appendix C	For each multi-line hoist rope drum, final tension values for each rope must be no more than plus or minus 5 percent from the average of the individual rope tension values.
2.15	FIELD TENSIONING MULTI-LINE HOISTS	35 01 70.13 - 3.6	CQC-L1, SDQC-L1, D-L1, ER-L1	D-L1, ER-L1		Daily Quality Control Report/ Daily Activity Log (DQCR) 01 45 00.3.10.1 & Specifications Appendix C	For two multi-line hoists on a gate, the total wire rope load on each hoist is computed by summing the measured tension values for all wire ropes on a hoist. The total wire rope load on each hoist must be within a range less than or equal to 0.5 percent of the average of the two total wire rope loads.
2.16	FIELD TENSIONING MULTI-LINE HOISTS	35 01 70.13 - 3.6	CQC-L1, SDQC-L1, D-L1, ER-L1	D-L1, ER-L1		Daily Quality Control Report/ Daily Activity Log (DQCR) 01 45 00.3.10.1 & Specifications Appendix C	Measure and adjust wire rope tensions while keeping the gate properly positioned and aligned. After "break-in/testing" test the ropes to determine if they share load equally, and if not, re-tension.
2.17	BREAK-IN/TESTING	35 01 70.13 - 3.7	CQC-L1, SDQC-L1, D-L1, ER-L1	D-L1, ER-L1		Daily Quality Control Report/ Daily Activity Log (DQCR) 01 45 00.3.10.1 & Specifications Appendix C	After installation is complete, run the gate-operating device through four complete cycles, fully open to fully closed.
2.18	ACCEPTANCE TRIAL OPERATION AND TEST	35 20 16.53, 3.3	D-L3, ER-L3			Daily Quality Control Report/ Daily Activity Log (DQCR) 01 45 00.3.10.1 & Specifications Appendix C	After the gate assembly has been installed, including operating machinery, the District will examine the complete system for final acceptance. Operation and test results shall be furnished to the District.
2.19	ACCEPTANCE TRIAL OPERATION AND TEST	35 20 16.53, 3.3	D-L3, ER-L3			Daily Quality Control Report/ Daily Activity Log (DQCR) 01 45 00.3.10.1 & Specifications Appendix C	The second trial operation and testing of the gate assembly shall be conducted with the reservoir normal operating pool hydrostatic pressure.
2.20	ELECTRIC ACTUATORS - EQUIPMENT TESTS	40 05 57.23 - 3.1	D-L3, ER-L3	D-L3, ER-L3		Manufacturer's certified REPORT - Transmittal 01 45 00.3.10.1. & Appen. C, Submittals 01 45 00.3.10.1. & Appen. C, D Submittal Register	Perform equipment tests during and after start-up to determine if equipment is performing as specified

3	ACCEPTANCE						
3.1	Deficiencies & Non-Conformances of this DFOW	Quality Control 01 45 00	CQC-5, SDQC-5, D-5, ER-5, MCT-5	D-L5, ER-L4		Deficiency Logs and NCN Logs 01 45 00.3.10.1 & Appendix C	All deficiencies and non-conformances have been corrected of work in order to avoid covering deficiencies.
3.2	Final Follow-up Control Phase Inspection	01 45 00, 3.9.3	CQC-L5, D-L5, ER-L5,	D-L5, ER-L5	provide agenda > 48 hours prior to meeting	Final Follow-up Control Phase Inspection Checklist & Punch-Out 01 45 00.3.10.1 & Specifications Appendix C	Final Follow-up Control Phase Inspection checklist & punch out items have been completed.
3.3	OPERATION AND MAINTENANCE MANUALS	35 20 16.53, 3.5	CQC-L5, D-L5, ER-L5,	D-L5, ER-L5		Transmittal 01 45 00.3.10.1. & Appen. C, Submittals 01 45 00.3.10.1. & Appen. C, D Submittal Register	Detailed operating and maintenance instructions, which shall include reduced-size copies of applicable drawings, applicable parts lists, parts lists, and catalogs covering all equipment furnished and which may be needed or useful in operation, maintenance, repairs, dismantling or assembling or assembling, shall be submitted.
3.4	AS-BUILT DRAWINGS	35 20 16.53, 3.6	CQC-L5, D-L5, ER-L5,	D-L5, ER-L5		Transmittal 01 45 00.3.10.1. & Appen. C, Submittals 01 45 00.3.10.1. & Appen. C, D Submittal Register	As-built Drawings shall be included with all field modifications.
3.5	SCHEDULE	35 20 16.53, 3.7	CQC-L5, D-L5, ER-L5,	D-L5, ER-L5		Transmittal 01 45 00.3.10.1. & Appen. C, Submittals 01 45 00.3.10.1. & Appen. C, D Submittal Register	The Contractor shall deliver the indicated items within the number of days or as otherwise indicated in the SPECIFIED schedule.

(1): A HOLD POINT is a mandatory requirement - advance notification and acceptance (verbal/written) is required prior to continuing work.

(2): A NOTIFY POINT requires advance notification prior to performing the activity.

(3): The DISTRICT/PQACT inspection form / checklist is to be completed by the Contractor and member of the District/PQACT prior to the start of work. The inspection form/ checklist shall show no incompletions.

LEVEL 1 = CONTINUOUS INSPECTION OF ACTIVITIES, LEVEL 2 = MONITOR CRITICAL ACTIVITIES AND WITNESS TESTING, LEVEL 3 = RANDOM INSPECTION AND/OR AT COMPLETION OF WORK, LEVEL 4 = REVIEW OF PRECONSTRUCTION DOCUMENTATION, LEVEL 5 - REVIEW OF FINAL DOCUMENTS

CQC = CONTRACTOR QUALITY CONTROL SDQC = SPECIALIZED DISCIPLINE D = DISTRICT/PQACT ER = ENGINEER OF RECORD MCT = MANUFACTURER CERTIFICATION/TESTING

Approved By District/PQACT QA Manager: *DRoy Moseley* ***Date:*** *29July2018*

INSPECTION / TEST PLAN (ITP)
C-43 WEST BASIN STORAGE RESERVOIR
CONTRACT NUMBER: CN XXXXXXXXXXX

CIVIL WORKS

Location: Hendry County, FL

Date Prepared:

Revision:

Contractor: **Prepared By:**

DISCHARGE PIPING
Spec. Section: 40 05 22, 40 17 30.00 40

Item No.	Attribute / Activity Description	Acceptance Criteria (Codes, Std., Spec., Drawings, Etc.)	INSPECTION REQUIREMENTS			Forms / Records / References (3)	Comments
			Inspect	Hold (1)	Notify (2)		
1	PRE-CONSTRUCTION						
1.1	Contractor's Quality Control Plan, Site Health & Safety Plan and Permits	Quality Control 01 45 00, Safety Requirements 01 35 26, Permits & Fees 00 31 46	D-L4	D-L4		Plans and Permits	Plans have been submitted by Contractor and approved by the District/PQACT. All pemits have been obtained to begin work.
1.2	Preconstruction Submittals	Submittals 01 33 00 40 05 22, 40 17 30.00 40	D-L4, ER-L4	D-L4, ER-L4		Transmittal 01 45 00.3.10.1. & Appen. C, Submittals 01 45 00.3.10.1. & Appen. C, Submittal Register	All preconstruction submittals for this DFOW shall be submitted by the Contractor and Approved by the District/PQACT.
1.3	Request For Information (RFIs)	Quality Control 01 45 00	D-L4, ER-L4	D-L4, ER-L4		Request for Information & Log 01 45 00.3.10.1 & Appen. C	All RFIs for this DFOW shall be answered in order to clear up any questions before work begins.
1.4	Work Plans	Quality Control 01 45 00	D-L4, ER-L4	D-L4, ER-L4		Plans	All work plans for this DFOW shall be submitted by the Contractor and approved by the District/PQACT.
1.5	Activity Hazard Analysis (AHA)	Safety Requirements 01 35 26	D-L4, ER-L4	D-L4, ER-L4		AHA 01 45 00.3.10.1 & Appen. C	The AHA for this DFOW have been submitted by the Contractor.
1.6	Previous Work Deficiencies & Non-Conformances of previous DFOW	Quality Control 01 45 00	CQC-L5, SDQC-L5, D-L5, ER-L5, MCT-L5	D-L4, ER-L4		Deficiency Logs and NCN Logs 01 45 00.3.10.1 & Appen. C	All deficiencies and non-conformances shall be corrected of previous work in order to avoid covering deficiencies.
1.7	Final Follow-up Control Phase Inspection of previous DFOW	Quality Control 01 45 00	CQC-L5, SDQC-L5, D-L5, ER-L5, MCT-L5	D-L4, ER-L4	48 Hours	Final Follow-up Control Phase Inspection Checklist & Punch-Out	Final Follow-up Control Phase Inspection checklist & punch out items shall be completed of previous work.
1.8	Preparatory Control Phase Inspection	Quality Control 01 45 00	CQC-L5, SDQC-L5, D-L5, ER-L5, MCT-L5	D-L4, ER-L4	48 Hours	Preparatory Control Phase Inspection Worksheet 01 45 00.3.10.1 & Appen. C	Preparatory Control Phase Inspection/Meeing shall be performed successfully without open issues.
2	CONSTRUCTION						
2.1	Initial Control Phase Inspection	01 45 00, 3.7.2	CQC-L5, SDQC-L5, D-L5, ER-L5,	D-L5, ER-L5	provide agenda > 48 hours prior to meeting	Initial Control Phase Inspection Checklist 01 45 00.3.10.1, & Specifications Appendix C	An Initial Control Phase Inspection shall be performed shortly after the DFOW has begun to determine if the DFOW plan is working and if the workmanship of the workers is satisfactory and meets safety standards.
2.2	Daily Follow-up Control Phase Inspections	01 45 00, 3.7.3	CQC-L1	N/A	N/A	Daily Quality Control Report/ Daily Activity Log (DQCR) 01 45 00.3.10.1 & Specifications Appendix C	Contractor to perform daily Follow-up Control Phase Inspections and document findings on DQCR.
2.3	Pipe Installation	40 05 22, 3.1	CQC-L1, D-L1, ER-L1,	D-L1, ER-L1		Daily Quality Control Report/ Daily Activity Log (DQCR) 01 45 00.3.10.1 & Specifications Appendix C	Pipe larger than 24" shall be joined in the trench. Pipe less than 24" can be joined prior to placement in the trench provided proper care is taken during placement to ensure the soundness of the joined sections.
2.4	Pipe Installation	40 05 22, 3.1	CQC-L1, D-L1, ER-L1,	D-L1, ER-L1		Daily Quality Control Report/ Daily Activity Log (DQCR) 01 45 00.3.10.1 & Specifications Appendix C	All pipe joints shall be lap welded slip joints unless indicated otherwise.
2.5	Pipe Installation	40 05 22, 3.1	CQC-L1, D-L1, ER-L1,	D-L1, ER-L1		Daily Quality Control Report/ Daily Activity Log (DQCR) 01 45 00.3.10.1 & Specifications Appendix C	Flanged joints where specified shall be made with gaskets and bolting materials and shall be made according to Manufacturer's recommendations and the requirements of AWWA M11. All bolts shall be tightened using procedures and recommended torque rates described in AWWA C604.
2.6	Nondestructive Testing (NDT)	40 17 30.00 40, 3.2.1.1	CQC-L4, D-L4, ER-L4,	D-L4, ER-L4		Daily Quality Control Report/ Daily Activity Log (DQCR) 01 45 00.3.10.1 & Specifications Appendix C	Perform fabrication and erection inspections prior to assembly, during assembly, during welding and after welding to ensure that materials and workmanship meet the requirements of the contract documents.
2.7	Nondestructive Testing (NDT)	40 17 30.00 40, 3.2.1.1	CQC-L4, D-L4, ER-L4,	D-L4, ER-L4		Transmittal 01 45 00.3.10.1. & Appen. C, Submittals 01 45 00.3.10.1. & Appen. C, D Submittal Register	Submit radiographs to the District. Verify each specified radiograph as specified.

2.8	Pressure Vessels - Test Method	40 17 30.00 40, 3.2.1.2	CQC-L4, D-L4, ER-L4,	D-L4, ER-L4		Daily Quality Control Report/ Daily Activity Log (DQCR) 01 45 00.3.10.1 & Specifications Appendix C	Perform all nondestructive testing in accordance with the requirements of ASME BPVC SEC V.
2.9	Pressure Vessels - Acceptance Requirements	40 17 30.00 40, 3.2.1.2	CQC-L4, D-L4, ER-L4,	D-L4, ER-L4		Daily Quality Control Report/ Daily Activity Log (DQCR) 01 45 00.3.10.1 & Specifications Appendix C	Ensure acceptance requirements are in accordance with ASME BPVC SEC V.
2.10	Piping - Test Method	40 17 30.00 40, 3.2.1.3	CQC-L4, D-L4, ER-L4,	D-L4, ER-L4		Transmittal 01 45 00.3.10.1. & Appen. C, Submittals 01 45 00.3.10.1. & Appen. C, D Submittal Register	Perform NDT of all piping systems, except plumbing systems, in accordance with the requirements of ASME BPVC SEC V.
3	**ACCEPTANCE**						
3.1	Final Follow-up Control Phase Inspection	01 45 00, 3.9.3	CQC-L5, D-L5, ER-L5,	D-L5, ER-L5	provide agenda > 48 hours prior to meeting	Final Follow-up Control Phase Inspection Checklist & Punch-Out 01 45 00.3.10.1 & Specifications Appendix C	Final Follow-up Control Phase Inspection checklist & punch out items have been completed.
3.2	WARRANTY	40 05 22, 1.6	CQC-L5, D-L5, ER-L5,	D-L5, ER-L5		Transmittal 01 45 00.3.10.1. & Appen. C, Submittals 01 45 00.3.10.1. & Appen. C, D Submittal Register	The warranty shall meet the requirements specified in SECTION 01 61 03 EQUIPMENT AND MATERIALS.

(1): A HOLD POINT is a mandatory requirement - advance notification and acceptance (verbal/written) is required prior to continuing work.

(2): A NOTIFY POINT requires advance notification prior to performing the activity.

(3): The DISTRICT/PQACT inspection form / checklist is to be completed by the Contractor and member of the District/PQACT prior to the start of work. The inspection form/ checklist shall show no incompletions.

LEVEL 1 = CONTINUOUS INSPECTION OF ACTIVITIES, LEVEL 2 = MONITOR CRITICAL ACTIVITIES AND WITNESS TESTING, LEVEL 3 = RANDOM INSPECTION AND/OR AT COMPLETION OF WORK, LEVEL 4 = REVIEW OF PRECONSTRUCTION DOCUMENTATION, LEVEL 5 - REVIEW OF FINAL DOCUMENTS

CQC = CONTRACTOR QUALITY CONTROL SDQC = SPECIALIZED DISCIPLINE D = DISTRICT/PQACT ER = ENGINEER OF RECORD MCT = MANUFACTURER CERTIFICATION/TESTING

Approved By District/PQACT QA Manager: *DRoy Moseley* ***Date:*** *27July2018*

INSPECTION / TEST PLAN (ITP)
C-43 WEST BASIN STORAGE RESERVOIR
CONTRACT NUMBER: CN XXXXXXXXXX

CIVIL WORKS

Location: Hendry County, FL

Date Prepared:

Revision:

Contractor: **Prepared By:**

VERTICAL AXIAL FLOW PUMP
Spec. Section: 35 45 02

Item No.	Attribute / Activity Description	Acceptance Criteria (Codes, Std., Spec., Drawings, Etc.)	INSPECTION REQUIREMENTS			Forms / Records / References (3)	Comments
			Inspect	Hold (1)	Notify (2)		
1	PRE-CONSTRUCTION						
1.1	Contractor's Quality Control Plan, Site Health & Safety Plan and Permits	Quality Control 01 45 00, Safety Requirements 01 35 26, Permits & Fees 00 31 46	D-L4	D-L4		Plans and Permits	Plans have been submitted by Contractor and approved by the District/PQACT. All pemits have been obtained to begin work.
1.2	Preconstruction Submittals	Submittals 01 33 00 35 45 01	D-L4, ER-L4	D-L4, ER-L4		Transmittal 01 45 00.3.10.1. & Appen. C, Submittals 01 45 00.3.10.1. & Appen. C, Submittal Register	All preconstruction submittals for this DFOW shall be submitted by the Contractor and Approved by the District/PQACT.
1.3	Request For Information (RFIs)	Quality Control 01 45 00	D-L4, ER-L4	D-L4, ER-L4		Request for Information & Log 01 45 00.3.10.1 & Appen. C	All RFIs for this DFOW shall be answered in order to clear up any questions before work begins.
1.4	Work Plans	Quality Control 01 45 00	D-L4, ER-L4	D-L4, ER-L4		Plans	All work plans for this DFOW shall be submitted by the Contractor and approved by the District/PQACT.
1.5	Activity Hazard Analysis (AHA)	Safety Requirements 01 35 26	D-L4, ER-L4	D-L4, ER-L4		AHA 01 45 00.3.10.1 & Appen. C	The AHA for this DFOW have been submitted by the Contractor.
1.6	Previous Work Deficiencies & Non-Conformances of previous DFOW	Quality Control 01 45 00	CQC-L5, SDQC-L5, D-L5, ER-L5, MCT-L5	D-L4, ER-L4		Deficiency Logs and NCN Logs 01 45 00.3.10.1 & Appen. C	All deficiencies and non-conformances shall be corrected of previous work in order to avoid covering deficiencies.
1.7	Final Follow-up Control Phase Inspection of previous DFOW	Quality Control 01 45 00	CQC-L5, SDQC-L5, D-L5, ER-L5, MCT-L5	D-L4, ER-L4	48 Hours	Final Follow-up Control Phase Inspection Checklist & Punch-Out	Final Follow-up Control Phase Inspection checklist & punch out items shall be completed of previous work.
1.8	Preparatory Control Phase Inspection	Quality Control 01 45 00	CQC-L5, SDQC-L5, D-L5, ER-L5, MCT-L5	D-L4, ER-L4	48 Hours	Preparatory Control Phase Inspection Worksheet 01 45 00.3.10.1 & Appen. C	Preparatory Control Phase Inspection/Meeing shall be performed successfully without open issues.
1.9	TEST AND INSPECTION COORDINATION AND NOTIFICATION	35 45 02, 1.9	CQC-L2, SQDC-L2, D-L2, ER-L2	D-L2, ER-L2	Contractor shall provide a minimum of two (2) weeks advance notice	Daily Quality Control Report/ Daily Activity Log (DQCR) 01 45 00.3.10.1 & Specifications Appendix C	The Contractor shall provide a minimum of two (2) weeks advance notice to the District of the date of witness tests or other inspections as specified or indicated herein. The Contractor shall be responsible for ensuring all tests and inspections are coordinated with the Manufacturer and all other appropriate subcontractors or trades people.
2	CONSTRUCTION						
2.1	Initial Control Phase Inspection	01 45 00, 3.7.2	CQC-L5, SDQC-L5, D-L5, ER-L5,	D-L5, ER-L5	provide agenda > 48 hours prior to meeting	Initial Control Phase Inspection Checklist 01 45 00.3.10.1, & Specifications Appendix C	An Initial Control Phase Inspection shall be performed shortly after the DFOW has begun to determine if the DFOW plan is working and if the workmanship of the workers is satisfactory and meets safety standards.
2.2	Daily Follow-up Control Phase Inspections	01 45 00, 3.7.3	CQC-L1	N/A	N/A	Daily Quality Control Report/ Daily Activity Log (DQCR) 01 45 00.3.10.1 & Specifications Appendix C	Contractor to perform daily Follow-up Control Phase Inspections and document findings on DQCR.
2.3	Factory Performance Test	35 45 02, 3.1	CQC-L2, SDQC-L2, D-L2, ER-L2	D-L2, ER-L2	Contractor shall provide the District with a minimum of five (5) days notice in advance of testing	Transmittal 01 45 00.3.10.1. & Appen. C, Submittals 01 45 00.3.10.1. & Appen. C, D Submittal Register, Daily Quality Control Report/ Daily Activity Log (DQCR) 01 45 00.3.10.1 & Specifications Appendix C	The pump Manufacturer shall conduct a factory performance test to demonstrate the pump complies with the specified performance. The test shall be in accordance to ANSI/HI 2.6.5, Vertical Pump Test, unless otherwise specified.
2.4	FACTORY INSPECTIONS	35 45 02, 3.2	CQC-L2, SDQC-L2, D-L2, ER-L2	D-L2, ER-L2		Transmittal 01 45 00.3.10.1. & Appen. C, Submittals 01 45 00.3.10.1. & Appen. C, D Submittal Register, Daily Quality Control Report/ Daily Activity Log (DQCR) 01 45 00.3.10.1 & Specifications Appendix C	The District with the Contractor may make periodic visits to the Manufacturer's plant to inspect the fabrication and assembly of the pump. The Manufacturer shall have available for review detailed fabrication and assembly drawings for manufacture of the entire pump.

2.5	FACTORY ASSEMBLY	35 45 02, 3.3	CQC-L2, SDQC-L2, D-L2, ER-L2	D-L2, ER-L2		Transmittal 01 45 00.3.10.1. & Appen. C, Submittals 01 45 00.3.10.1. & Appen. C, D Submittal Register, Daily Quality Control Report/ Daily Activity Log (DQCR) 01 45 00.3.10.1 & Specifications Appendix C	Pumps shall be completely shop assembled (in the vertical position) and aligned prior to shipping. Tolerances shall not exceed those specified or shown in the Manufacturer's drawings. Rotating elements shall be checked for binding. The District with the Contractor shall witness the shop assembly unless otherwise stated.
2.6	STORAGE	35 45 02, 3.4	CQC-L1	D-L1, ER-L1		Daily Quality Control Report/ Daily Activity Log (DQCR) 01 45 00.3.10.1 & Specifications Appendix C	All on-site and off-site storage provisions are subject to approval.
2.7	INSTALLATION	35 45 02, 3.5	CQC-L2, SDQC-L2, D-L2, ER-L2, MCT-2	D-L2, ER-L2		Daily Quality Control Report/ Daily Activity Log (DQCR) 01 45 00.3.10.1 & Specifications Appendix C	Installation, start-up, and testing of all equipment and associated construction shall conform to Manufacturer's recommendations and the installation and erection manual.
2.8	FIELD OPERATING TEST	35 45 01, 3.6	CQC-L2, SDQC-L2, D-L2, ER-L2, MCT-2	D-L2, ER-L2		Daily Quality Control Report/ Daily Activity Log (DQCR) 01 45 00.3.10.1 & Specifications Appendix C	All field operating and equipment tests shall be performed by the Contractor and in the presence of the District. The Manufacturer's field representative shall be present during all operating tests.
3	**ACCEPTANCE**						
3.1	Final Follow-up Control Phase Inspection	01 45 00, 3.9.3	CQC-L5, D-L5, ER-L5,	D-L5, ER-L5	provide agenda > 48 hours prior to meeting	Final Follow-up Control Phase Inspection Checklist & Punch-Out 01 45 00.3.10.1 & Specifications Appendix C	Final Follow-up Control Phase Inspection checklist & punch out items have been completed.
3.2	OPERATION AND MAINTENANCE MANUAL	35 45 02, 1.14	CQC-L4, SQDC-L4, D-L4, ER-L4	D-L4, ER-L4		Transmittal 01 45 00.3.10.1. & Appen. C, Submittals 01 45 00.3.10.1. & Appen. C, D Submittal Register	The Contractor shall submit operation and maintenance manuals containing complete information on operation, lubrication, adjustment, routine and special maintenance, disassembly, repair, re-assembly and trouble diagnosis of the pump and its auxiliary units.
3.3	WARRANTY	35 45 02, 1.15	CQC-L4, SQDC-L4, D-L4, ER-L4	D-L4, ER-L4		Transmittal 01 45 00.3.10.1. & Appen. C, Submittals 01 45 00.3.10.1. & Appen. C, D Submittal Register	The warranty shall meet the requirements specified in SECTION 01 61 03 EQUIPMENT AND MATERIALS
3.4	Sixty (60) Day Check	35 45 02, 3.7A	CQC-L2, SDQC-L2, D-L2, ER-L2, MCT-2	D-L2, ER-L2		Daily Quality Control Report/ Daily Activity Log (DQCR) 01 45 00.3.10.1 & Specifications Appendix C	Recheck pumps for vibration in accordance with SECTION 01 43 27 EQUIPMENT VIBRATION TESTING LASER ALIGNMENT after the equipment has been placed in operation for approximately 60 days. All vibration checks shall be performed by an independent qualified testing consultant with all costs borne by the District.
3.5	Warranty Period	35 45 02, 3.7B	CQC-L2, SDQC-L2, D-L2, ER-L2, MCT-2	D-L2, ER-L2		Daily Quality Control Report/ Daily Activity Log (DQCR) 01 45 00.3.10.1 & Specifications Appendix C	The District may make regular vibration measurements of the pump units throughout the warranty period in accordance with SECTION 01 43 27 EQUIPMENT VIBRATION TESTING AND LASER ALIGNMENT.

(1): A HOLD POINT is a mandatory requirement - advance notification and acceptance (verbal/written) is required prior to continuing work.

(2): A NOTIFY POINT requires advance notification prior to performing the activity.

(3): The DISTRICT/PQACT inspection form / checklist is to be completed by the Contractor and member of the District/PQACT prior to the start of work. The inspection form/ checklist shall show no incompletions.

LEVEL 1 = CONTINUOUS INSPECTION OF ACTIVITIES, LEVEL 2 = MONITOR CRITICAL ACTIVITIES AND WITNESS TESTING, LEVEL 3 = RANDOM INSPECTION AND/OR AT COMPLETION OF WORK, LEVEL 4 = REVIEW OF PRECONSTRUCTION DOCUMENTATION, LEVEL 5 - REVIEW OF FINAL DOCUMENTS

CQC = CONTRACTOR QUALITY CONTROL SDQC = SPECIALIZED DISCIPLINE D = DISTRICT/PQACT ER = ENGINEER OF RECORD MCT = MANUFACTURER CERTIFICATION/TESTING

Approved By District/PQACT QA Manager: ***Date:***

INSPECTION / TEST PLAN (ITP)
C-43 WEST BASIN STORAGE RESERVOIR
CONTRACT NUMBER: CN XXXXXXXXXX

CIVIL WORKS

Location: Hendry County, FL

Date Prepared:

Revision:

Contractor: **Prepared By:**

LPG FUEL TANK MONITORING
Spec. Section: 23 14 00

Item No.	Attribute / Activity Description	Acceptance Criteria (Codes, Std., Spec., Drawings, Etc.)	INSPECTION REQUIREMENTS			Forms / Records / References (3)	Comments
			Inspect	Hold (1)	Notify (2)		
1	PRE-CONSTRUCTION						
1.1	Contractor's Quality Control Plan, Site Health & Safety Plan and Permits	Quality Control 01 45 00, Safety Requirements 01 35 26, Permits & Fees 00 31 46	D-L4	D-L4		Plans and Permits	Plans have been submitted by Contractor and approved by the District/PQACT. All pemits have been obtained to begin work.
1.2	Preconstruction Submittals	Submittals 01 33 00 23 14 00	D-L4, ER-L4	D-L4, ER-L4		Transmittal 01 45 00.3.10.1. & Appen. C, Submittals 01 45 00.3.10.1. & Appen. C, Submittal Register	All preconstruction submittals for this DFOW shall be submitted by the Contractor and Approved by the District/PQACT.
1.3	Request For Information (RFIs)	Quality Control 01 45 00	D-L4, ER-L4	D-L4, ER-L4		Request for Information & Log 01 45 00.3.10.1 & Appen. C	All RFIs for this DFOW shall be answered in order to clear up any questions before work begins.
1.4	Work Plans	Quality Control 01 45 00	D-L4, ER-L4	D-L4, ER-L4		Plans	All work plans for this DFOW shall be submitted by the Contractor and approved by the District/PQACT.
1.5	Activity Hazard Analysis (AHA)	Safety Requirements 01 35 26	D-L4, ER-L4	D-L4, ER-L4		AHA 01 45 00.3.10.1 & Appen. C	The AHA for this DFOW have been submitted by the Contractor.
1.6	Previous Work Deficiencies & Non-Conformances of previous DFOW	Quality Control 01 45 00	CQC-L5, SDQC-L5, D-L5, ER-L5, MCT-L5	D-L4, ER-L4		Deficiency Logs and NCN Logs 01 45 00.3.10.1 & Appen. C	All deficiencies and non-conformances shall be corrected of previous work in order to avoid covering deficiencies.
1.7	Final Follow-up Control Phase Inspection of previous DFOW	Quality Control 01 45 00	CQC-L5, SDQC-L5, D-L5, ER-L5, MCT-L5	D-L4, ER-L4	48 Hours	Final Follow-up Control Phase Inspection Checklist & Punch-Out	Final Follow-up Control Phase Inspection checklist & punch out items shall be completed of previous work.
1.8	Preparatory Control Phase Inspection	Quality Control 01 45 00	CQC-L5, SDQC-L5, D-L5, ER-L5, MCT-L5	D-L4, ER-L4	48 Hours	Preparatory Control Phase Inspection Worksheet 01 45 00.3.10.1 & Appen. C	Preparatory Control Phase Inspection/Meeing shall be performed successfully without open issues.
2	CONSTRUCTION						
2.1	Initial Control Phase Inspection	01 45 00, 3.7.2	CQC-L5, SDQC-L5, D-L5, ER-L5,	D-L5, ER-L5	provide agenda > 48 hours prior to meeting	Initial Control Phase Inspection Checklist 01 45 00.3.10.1, & Specifications Appendix C	An Initial Control Phase Inspection shall be performed shortly after the DFOW has begun to determine if the DFOW plan is working and if the workmanship of the workers is satisfactory and meets safety standards.
2.2	Daily Follow-up Control Phase Inspections	01 45 00,3.7.3	CQC-L1	N/A	N/A	Daily Quality Control Report/ Daily Activity Log (DQCR) 01 45 00.3.10.1 & Specifications Appendix C	Contractor to perform daily Follow-up Control Phase Inspections and document findings on DQCR.
2.3	INSPECTION	23 14 00, 1.4	CQC-L4, SQDC-L4, D-L4, ER-L4	D-L4, ER-L4		Daily Quality Control Report/ Daily Activity Log (DQCR) 01 45 00.3.10.1 & Specifications Appendix C	Examine the substrates and conditions under which the monitoring system is to be installed and notify the District, in writing, of conditions detrimental to the proper and timely completion of the Work. Do not proceed with the Work until unsatisfactory conditions have been corrected.
2.4	INSTALLATION AND TESTING	23 14 00, 1.4	CQC-L4, SQDC-L4, D-L4, ER-L4	D-L4, ER-L4		Daily Quality Control Report/ Daily Activity Log (DQCR) 01 45 00.3.10.1 & Specifications Appendix C	Install equipment complete with necessary hardware in accordance with the Drawings, Manufacturer's instructions, and as specified.
3	ACCEPTANCE						
3.1	Final Follow-up Control Phase Inspection	01 45 00, 3.9.3	CQC-L5, D-L5, ER-L5,	D-L5, ER-L5	provide agenda > 48 hours prior to meeting	Final Follow-up Control Phase Inspection Checklist & Punch-Out 01 45 00.3.10.1 & Specifications Appendix C	Final Follow-up Control Phase Inspection checklist & punch out items have been completed.
3.2	WARRANTY	23 14 00, 1.4	CQC-L5, D-L5, ER-L5,	D-L5, ER-L5		Transmittal 01 45 00.3.10.1. & Appen. C, Submittals 01 45 00.3.10.1. & Appen. C, D Submittal Register	The warranty shall meet the requirements specified in SECTION 01 61 03 EQUIPMENT AND MATERIALS.

3.3	OPERATION AND MAINTENANCE MANUALS	23 14 00, 3.3	CQC-L5, D-L5, ER-L5,	D-L5, ER-L5			The Contractor shall submit, prior to Contract Close-out, the system's maintenance and operation manuals. All manuals shall be reviewed by the District for approval. Any manual rejected by the District shall be revised and resubmitted by accordingly.

(1): A HOLD POINT is a mandatory requirement - advance notification and acceptance (verbal/written) is required prior to continuing work.

(2): A NOTIFY POINT requires advance notification prior to performing the activity.

(3): The DISTRICT/PQACT inspection form / checklist is to be completed by the Contractor and member of the District/PQACT prior to the start of work. The inspection form/ checklist shall show no incompletions.

LEVEL 1 = CONTINUOUS INSPECTION OF ACTIVITIES, LEVEL 2 = MONITOR CRITICAL ACTIVITIES AND WITNESS TESTING, LEVEL 3 = RANDOM INSPECTION AND/OR AT COMPLETION OF WORK, LEVEL 4 = REVIEW OF PRECONSTRUCTION DOCUMENTATION, LEVEL 5 - REVIEW OF FINAL DOCUMENTS

CQC = CONTRACTOR QUALITY CONTROL SDQC = SPECIALIZED DISCIPLINE D = DISTRICT/PQACT ER = ENGINEER OF RECORD MCT = MANUFACTURER CERTIFICATION/TESTING

Approved By District/PQACT QA Manager: *DRoy Moseley* ***Date:*** *26July2018*

INSPECTION / TEST PLAN (ITP)
C-43 WEST BASIN STORAGE RESERVOIR
CONTRACT NUMBER: CN XXXXXXXXXX
CIVIL WORKS

Location: Hendry County, FL
Date Prepared:
Revision:
Contractor: **Prepared By:**

INSULATED WIRE & CABLE
Spec. Section: 26 05 19.10 10

Item No.	Attribute / Activity Description	Acceptance Criteria (Codes, Std., Spec., Drawings, Etc.)	INSPECTION REQUIREMENTS			Forms / Records / References (3)	Comments
			Inspect	Hold (1)	Notify (2)		
1	PRE-CONSTRUCTION						
1.1	Contractor's Quality Control Plan, Site Health & Safety Plan and Permits	Quality Control 01 45 00, Safety Requirements 01 35 26, Permits & Fees 00 31 46	D-L4	D-L4		Plans and Permits	Plans have been submitted by Contractor and approved by the District/PQACT. All pemits have been obtained to begin work.
1.2	Preconstruction Submittals	Submittals 01 33 00 26 05 19.10 10	D-L4, ER-L4	D-L4, ER-L4		Transmittal 01 45 00.3.10.1. & Appen. C, Submittals 01 45 00.3.10.1. & Appen. C, Submittal Register	All preconstruction submittals for this DFOW shall be submitted by the Contractor and Approved by the District/PQACT.
1.3	Request For Information (RFIs)	Quality Control 01 45 00	D-L4, ER-L4	D-L4, ER-L4		Request for Information & Log 01 45 00.3.10.1 & Appen. C	All RFIs for this DFOW shall be answered in order to clear up any questions before work begins.
1.4	Work Plans	Quality Control 01 45 00	D-L4, ER-L4	D-L4, ER-L4		Plans	All work plans for this DFOW shall be submitted by the Contractor and approved by the District/PQACT.
1.5	Activity Hazard Analysis (AHA)	Safety Requirements 01 35 26	D-L4, ER-L4	D-L4, ER-L4		AHA 01 45 00.3.10.1 & Appen. C	The AHA for this DFOW have been submitted by the Contractor.
1.6	Previous Work Deficiencies & Non-Conformances of previous DFOW	Quality Control 01 45 00	CQC-L5, SDQC-L5, D-L5, ER-L5, MCT-L5	D-L4, ER-L4		Deficiency Logs and NCN Logs 01 45 00.3.10.1 & Appen. C	All deficiencies and non-conformances shall be corrected of previous work in order to avoid covering deficiencies.
1.7	Final Follow-up Control Phase Inspection of previous DFOW	Quality Control 01 45 00	CQC-L5, SDQC-L5, D-L5, ER-L5, MCT-L5	D-L4, ER-L4	48 Hours	Final Follow-up Control Phase Inspection Checklist & Punch-Out	Final Follow-up Control Phase Inspection checklist & punch out items shall be completed of previous work.
1.8	Preparatory Control Phase Inspection	Quality Control 01 45 00	CQC-L5, SDQC-L5, D-L5, ER-L5, MCT-L5	D-L4, ER-L4	48 Hours	Preparatory Control Phase Inspection Worksheet 01 45 00.3.10.1 & Appen. C	Preparatory Control Phase Inspection/Meeing shall be performed successfully without open issues.
1.9	Cable Data	26 05 19.10 10,3.2.1	D-L4, ER-L4	D-L4, ER-L4		Transmittal 01 45 00.3.10.1. & Appen. C, Submittals 01 45 00.3.10.1. & Appen. C, D Submittal Register	Do not begin any wire and cable fabrication until materials are submitted and approved by the Construction Manager.
2	CONSTRUCTION						
2.1	Initial Control Phase Inspection	01 45 00	CQC-L5, SDQC-L5, D-L5, ER-L5, MCT-L5	D-L4, ER-L4	48 Hours	Initial Control Phase Inspection Agenda 01 45 00.1.10.1.13, Initial Control Phase Inspection	An Initial Control Phase Inspection shall be performed shortly after the DFOW has begun to determine if the
2.2	Independent Tests		CQC-L2, D-L2, ER-L2,	D-L2, ER-L2		Daily Quality Control Report/ Daily Activity Log (DQCR) 01 45 00.3.10.1 & Specifications Appendix C	The District may make visual inspections, continuity or resistance checks, insulation resistance readings, power factor tests, or dc high potential tests at field test values. A cable's failure to pass these tests and inspections, or failure to produce readings consistent with acceptable values for the application, will be grounds for rejection of the cable.

3	ACCEPTANCE						
3.1	Final Follow-up Control Phase Inspection	01 45 00	CQC-L6, D-L6, ER-L6,	D-L6, ER-L6	48 Hours	Final Follow-up Control Phase Inspection Checklist & Punch-Out	Final Follow-up Control Phase Inspection checklist & punch out items have been completed.

(1): A HOLD POINT is a mandatory requirement - advance notification and acceptance (verbal/written) is required prior to continuing work.
(2): A NOTIFY POINT requires advance notification prior to performing the activity.
(3): The DISTRICT/PQACT inspection form / checklist is to be completed by the Contractor and member of the District/PQACT prior to the start of work. The inspection form/ checklist shall show no incompletions.

LEVEL 1 = CONTINUOUS INSPECTION OF ACTIVITIES, LEVEL 2 = MONITOR CRITICAL ACTIVITIES AND WITNESS TESTING, LEVEL 3 = RANDOM INSPECTION AND/OR AT COMPLETION OF WORK, LEVEL 4 = REVIEW OF PRECONSTRUCTION DOCUMENTATION, LEVEL 5 - REVIEW OF FINAL DOCUMENTS

CQC = CONTRACTOR QUALITY CONTROL SDQC = SPECIALIZED DISCIPLINE D = DISTRICT/PQACT ER = ENGINEER OF RECORD MCT = MANUFACTURER CERTIFICATION/TESTING

Approved By District/PQACT QA Manager: *DRoy Moseley* ***Date:*** *26July2018*

INSPECTION / TEST PLAN (ITP)
C-43 WEST BASIN STORAGE RESERVOIR
CONTRACT NUMBER: CN XXXXXXXXXX

CIVIL WORKS

Location: Hendry County, FL

Date Prepared:

Revision:

Contractor: **Prepared By:**

LOW VOLTAGE OVERCURRENT DEVICE
Spec. Section: 26 05 71.00 40

Item No.	Attribute / Activity Description	Acceptance Criteria (Codes, Std., Spec., Drawings, Etc.)	INSPECTION REQUIREMENTS			Forms / Records / References (3)	Comments
			Inspect	Hold (1)	Notify (2)		
1	PRE-CONSTRUCTION						
1.1	Contractor's Quality Control Plan, Site Health & Safety Plan and Permits	Quality Control 01 45 00, Safety Requirements 01 35 26, Permits & Fees 00 31 46	D-L4	D-L4		Plans and Permits	Plans have been submitted by Contractor and approved by the District/PQACT. All pemits have been obtained to begin work.
1.2	Preconstruction Submittals	Submittals 01 33 00 26 05 71.00 40	D-L4, ER-L4	D-L4, ER-L4		Transmittal 01 45 00.3.10.1. & Appen. C, Submittals 01 45 00.3.10.1. & Appen. C, Submittal Register	All preconstruction submittals for this DFOW shall be submitted by the Contractor and Approved by the District/PQACT.
1.3	Request For Information (RFIs)	Quality Control 01 45 00	D-L4, ER-L4	D-L4, ER-L4		Request for Information & Log 01 45 00.3.10.1 & Appen. C	All RFIs for this DFOW shall be answered in order to clear up any questions before work begins.
1.4	Work Plans	Quality Control 01 45 00	D-L4, ER-L4	D-L4, ER-L4		Plans	All work plans for this DFOW shall be submitted by the Contractor and approved by the District/PQACT.
1.5	Activity Hazard Analysis (AHA)	Safety Requirements 01 35 26	D-L4, ER-L4	D-L4, ER-L4		AHA 01 45 00.3.10.1 & Appen. C	The AHA for this DFOW have been submitted by the Contractor.
1.6	Previous Work Deficiencies & Non-Conformances of previous DFOW	Quality Control 01 45 00	CQC-L5, SDQC-L5, D-L5, ER-L5, MCT-L5	D-L4, ER-L4		Deficiency Logs and NCN Logs 01 45 00.3.10.1 & Appen. C	All deficiencies and non-conformances shall be corrected of previous work in order to avoid covering deficiencies.
1.7	Final Follow-up Control Phase Inspection of previous DFOW	Quality Control 01 45 00	CQC-L5, SDQC-L5, D-L5, ER-L5, MCT-L5	D-L4, ER-L4	48 Hours	Final Follow-up Control Phase Inspection Checklist & Punch-Out	Final Follow-up Control Phase Inspection checklist & punch out items shall be completed of previous work.
1.8	Preparatory Control Phase Inspection	Quality Control 01 45 00	CQC-L5, SDQC-L5, D-L5, ER-L5, MCT-L5	D-L4, ER-L4	48 Hours	Preparatory Control Phase Inspection Worksheet 01 45 00.3.10.1 & Appen. C	Preparatory Control Phase Inspection/Meeing shall be performed successfully without open issues.
2	CONSTRUCTION						
2.1	Initial Control Phase Inspection	01 45 00, 3.7.2	CQC-L5, SDQC-L5, D-L5, ER-L5,	D-L5, ER-L5	provide agenda > 48 hours prior to meeting	Initial Control Phase Inspection Checklist 01 45 00.3.10.1, & Specifications Appendix C	An Initial Control Phase Inspection shall be performed shortly after the DFOW has begun to determine if the DFOW plan is working and if the workmanship of the workers is satisfactory and meets safety standards.
2.2	Daily Follow-up Control Phase Inspections	01 45 00, 3.7.3	CQC-L1	N/A	N/A	Daily Quality Control Report/ Daily Activity Log (DQCR) 01 45 00.3.10.1 & Specifications Appendix C	Contractor to perform daily Follow-up Control Phase Inspections and document findings on DQCR.
2.3	FINISH	26 05 71.00 40, 2.9	CQC-L1, SDQC-L1, D-L1, ER-L1,	D-L1, ER-L1	provide agenda > 48 hours prior to meeting	Daily Quality Control Report/ Daily Activity Log (DQCR) 01 45 00.3.10.1 & Specifications Appendix C	Protect metallic materials against corrosion. Provide equipment with the standard finish by the manufacturer when used for most indoor installations.
2.4	INSTALLATION	26 05 71.00 40, 3.1	CQC-L1, SDQC-L1, D-L1, ER-L1,	D-L1, ER-L1	provide agenda > 48 hours prior to meeting	Daily Quality Control Report/ Daily Activity Log (DQCR) 01 45 00.3.10.1 & Specifications Appendix C	Install Control devices and protective devices that are not factory installed in equipment, in accordance with the manufacturer's recommendations.
2.5	INSTALLATION	26 05 71.00 40, 3.1	CQC-L1, SDQC-L1, D-L1, ER-L1,	D-L1, ER-L1	provide agenda > 48 hours prior to meeting	Daily Quality Control Report/ Daily Activity Log (DQCR) 01 45 00.3.10.1 & Specifications Appendix C	Conform to NFPA 70, NEMA ICS 1 and NEMA ICS 2 requirements for installation of control and protective devices.
2.6	INSTALLATION	26 05 71.00 40, 3.1	CQC-L1, SDQC-L1, D-L1, ER-L1,	D-L1, ER-L1	provide agenda > 48 hours prior to meeting	Daily Quality Control Report/ Daily Activity Log (DQCR) 01 45 00.3.10.1 & Specifications Appendix C	Field adjust and operations test the control and protective devices.
2.7	FIELD TESTING	26 05 71.00 40, 3.2	CQC-L1, SDQC-L1, D-L1, ER-L1,	D-L1, ER-L1	provide agenda > 48 hours prior to meeting	Daily Quality Control Report/ Daily Activity Log (DQCR) 01 45 00.3.10.1 & Specifications Appendix C	Demonstrate the operation and controls of protective devices of non-factory installed equipment.
2.8	FIELD TESTING	26 05 71.00 40, 3.2	CQC-L1, SDQC-L1, D-L1, ER-L1,	D-L1, ER-L1	provide agenda > 48 hours prior to meeting	Daily Quality Control Report/ Daily Activity Log (DQCR) 01 45 00.3.10.1 & Specifications Appendix C	Verify tap settings of instrumentation, potential, and current transformers.
2.9	FIELD TESTING	26 05 71.00 40, 3.2	CQC-L1, SDQC-L1, D-L1, ER-L1,	D-L1, ER-L1	provide agenda > 48 hours prior to meeting	Daily Quality Control Report/ Daily Activity Log (DQCR) 01 45 00.3.10.1 & Specifications Appendix C	Field adjust reduced-voltage starting devices to obtain optimum operating conditions. Provide test meters and instrument transformers that conform to ANSI C12.1 and IEEE C57.13.

2.10	FIELD TESTING	26 05 71.00 40, 3.2	CQC-L1, SDQC-L1, D-L1, ER-L1,	D-L1, ER-L1	provide agenda > 48 hours prior to meeting	Daily Quality Control Report/ Daily Activity Log (DQCR) 01 45 00.3.10.1 & Specifications Appendix C	Provide final test reports with a cover letter/sheet clearly marked with the System name, Date, and the words Final Test Reports to the Construction Manager for approval.
3	**ACCEPTANCE**						
3.1	Deficiencies & Non-Conformances of this DFOW	Quality Control 01 45 00	CQC-5, SDQC-5, D-5, ER-5	D-L5, ER-L4		Deficiency Logs and NCN Logs 01 45 00.3.10.1 & Appendix C	All deficiencies and non-conformances have been corrected of work in order to avoid covering deficiencies.
3.2	Final Follow-up Control Phase Inspection	01 45 00, 3.9.3	CQC-L5, D-L5, ER-L5,	D-L5, ER-L5	provide agenda > 48 hours prior to meeting	Final Follow-up Control Phase Inspection Checklist & Punch-Out 01 45 00.3.10.1 & Specifications Appendix C	Final Follow-up Control Phase Inspection checklist & punch out items have been completed.

(1): A HOLD POINT is a mandatory requirement - advance notification and acceptance (verbal/written) is required prior to continuing work.

(2): A NOTIFY POINT requires advance notification prior to performing the activity.

(3): The DISTRICT/PQACT inspection form / checklist is to be completed by the Contractor and member of the District/PQACT prior to the start of work. The inspection form/ checklist shall show no incompletions.

LEVEL 1 = CONTINUOUS INSPECTION OF ACTIVITIES, LEVEL 2 = MONITOR CRITICAL ACTIVITIES AND WITNESS TESTING, LEVEL 3 = RANDOM INSPECTION AND/OR AT COMPLETION OF WORK, LEVEL 4 = REVIEW OF PRECONSTRUCTION DOCUMENTATION, LEVEL 5 - REVIEW OF FINAL DOCUMENTS

CQC = CONTRACTOR QUALITY CONTROL SDQC = SPECIALIZED DISCIPLINE D = DISTRICT/PQACT ER = ENGINEER OF RECORD MCT = MANUFACTURER CERTIFICATION/TESTING

Approved By District/PQACT QA Manager: *D Roy Moseley* ***Date:*** *25July2018*

INSPECTION / TEST PLAN (ITP)
C-43 WEST BASIN STORAGE RESERVOIR
CONTRACT NUMBER: CN XXXXXXXXXX
CIVIL WORKS

Location: Hendry County, FL
Date Prepared:
Revision:
Contractor: **Prepared By:**

UNDERGROUND ELECTRICAL DISTRIBUTION
Spec. Section: 33 71 02

Item No.	Attribute / Activity Description	Acceptance Criteria (Codes, Std., Spec., Drawings, Etc.)	INSPECTION REQUIREMENTS			Forms / Records / References (3)	Comments
			Inspect	Hold (1)	Notify (2)		
1	PRE-CONSTUCTION						
1.1	Contractor's Quality Control Plan, Site Health & Safety Plan and Permits	Quality Control 01 45 00, Safety Requirements 01 35 26, Permits & Fees 00 31 46	D-L4	D-L4		Plans and Permits	Plans have been submitted by Contractor and approved by the District/PQACT. All pemits have been obtained to begin work.
1.2	Preconstruction Submittals	Submittals 01 33 00 33 71 02	D-L4, ER-L4	D-L4, ER-L4		Transmittal 01 45 00.3.10.1. & Appen. C, Submittals 01 45 00.3.10.1. & Appen. C, Submittal Register	All preconstruction submittals for this DFOW shall be submitted by the Contractor and Approved by the District/PQACT.
1.3	Request For Information (RFIs)	Quality Control 01 45 00	D-L4, ER-L4	D-L4, ER-L4		Request for Information & Log 01 45 00.3.10.1 & Appen. C	All RFIs for this DFOW shall be answered in order to clear up any questions before work begins.
1.4	Work Plans	Quality Control 01 45 00	D-L4, ER-L4	D-L4, ER-L4		Plans	All work plans for this DFOW shall be submitted by the Contractor and approved by the District/PQACT.
1.5	Activity Hazard Analysis (AHA)	Safety Requirements 01 35 26	D-L4, ER-L4	D-L4, ER-L4		AHA 01 45 00.3.10.1 & Appen. C	The AHA for this DFOW have been submitted by the Contractor.
1.6	Previous Work Deficiencies & Non-Conformances of previous DFOW	Quality Control 01 45 00	CQC-L5, SDQC-L5, D-L5, ER-L5, MCT-L5	D-L4, ER-L4		Deficiency Logs and NCN Logs 01 45 00.3.10.1 & Appen. C	All deficiencies and non-conformances shall be corrected of previous work in order to avoid covering deficiencies.
1.7	Final Follow-up Control Phase Inspection of previous DFOW	Quality Control 01 45 00	CQC-L5, SDQC-L5, D-L5, ER-L5, MCT-L5	D-L4, ER-L4	48 Hours	Final Follow-up Control Phase Inspection Checklist & Punch-Out	Final Follow-up Control Phase Inspection checklist & punch out items shall be completed of previous work.
1.8	Preparatory Control Phase Inspection	Quality Control 01 45 00	CQC-L5, SDQC-L5, D-L5, ER-L5, MCT-L5	D-L4, ER-L4	48 Hours	Preparatory Control Phase Inspection Worksheet 01 45 00.3.10.1 & Appen. C	Preparatory Control Phase Inspection/Meeing shall be performed successfully without open issues.
2	CONSTRUCTION						
2.1	Initial Control Phase Inspection	01 45 00	CQC-L5, SDQC-L5, D-L5, ER-L5, MCT-L5	D-L4, ER-L4	provide agenda > 48 Hours prior to meeting	Initial Control Phase Inspection Agenda 01 45 00.1.10.1.13, Initial Control Phase Inspection Checklist	An Initial Control Phase Inspection shall be performed shortly after the DFOW has begun to determine if the DFOW plan is working and if the workmanship of the workers is satisfactory and meets safety standards.
2.2	CABLE INSPECTION LOW VOLTAGE	33 71 02, 3.2	CQC-L2, SDQC-L2, D-L2, ER-L2	D-L2, ER-L2		Daily Quality Control Report/ Daily Activity Log (DQCR) 01 45 00.3.10.1 & Appen. C	Inspect each cable reel for correct storage positions, signs of physical damage, and broken end seals prior to installation.
2.3	Field Painting	33 71 02, 3.4.1	CQC-L2, SDQC-L2, D-L2, ER-L2	D-L2, ER-L2		Daily Quality Control Report/ Daily Activity Log (DQCR) 01 45 00.3.10.1 & Appen. C	Cast-iron frames and covers not buried in concrete or masonry must be leaned of mortar, rust, grease, dirt and other deleterious materials, and given a coat of bituminous paint.
2.4	UNDERGROUND CONDUIT AND DUCT SYSTEMS	33 71 02, 3.5	CQC-L2, SDQC-L2, D-L2, ER-L2	D-L2, ER-L2		Daily Quality Control Report/ Daily Activity Log (DQCR) 01 45 00.3.10.1 & Appen. C	Run conduit in straight lines except where a change of direction is necessary and in accordance with 33 71 02, 3.5
2.5	GROUNDING SYSTEMS	33 71 02, 3.6	CQC-L2, SDQC-L2, D-L2, ER-L2	D-L2, ER-L2		Daily Quality Control Report/ Daily Activity Log (DQCR) 01 45 00.3.10.1 & Appen. C	NFPA 70 and IEEE C2, except provide grounding systems with a resistance to solid earth ground not exceeding 25 ohms.

2.6	GROUNDING SYSTEMS	33 71 02, 3.6	CQC-L2, SDQC-L2, D-L2, ER-L2	D-L2, ER-L2		Daily Quality Control Report/ Daily Activity Log (DQCR) 01 45 00.3.10.1 & Appen. C	Install grounding in accordance with 33 71 02, 3.6. Should the resultant (combined) resistance exceed the specified resistance, measured not less than 48 hours after rainfall, notify the Construction Manager immediately.
2.7	EXCAVATING, BACKFILLING, AND COMPACTING	33 71 02, 3.7	CQC-L1, SDQC-L1, D-L1, ER-L1	D-L1, ER-L1		Daily Quality Control Report/ Daily Activity Log (DQCR) 01 45 00.3.10.1 & Appen. C	Provide in accordance with NFPA 70 and Section 31 00 00 EARTHWORK and in accordance with 33 71 02, 3.7
2.8	CAST-IN-PLACE CONCRETE	33 71 02, 3.8	CQC-L1, SDQC-L1, D-L1, ER-L1	D-L1, ER-L1		Daily Quality Control Report/ Daily Activity Log (DQCR) 01 45 00.3.10.1 & Appen. C	Provide concrete in accordance with Section 03 31 01.00 10 CAST-IN-PLACE STRUCTURAL CONCRETE FOR CIVIL WORKS and in accordance with 33 71 02, 3.8.
2.9	Field Acceptance Checks and Tests - Low Voltage Cables, 600-Volt	33 71 02, 3.9.1.1	CQC-L4, SQDC-L4, D-L4, ER-L4	D-L4, ER-L4		Daily Quality Control Report/ Daily Activity Log (DQCR) 01 45 00.3.10.1 & Appen. C	Visual and mechanical inspection & Electrical tests
2.10	Field Acceptance Checks and Tests - Grounding System	33 71 02, 3.9.1.2	CQC-L4, SQDC-L4, D-L4, ER-L4	D-L4, ER-L4		Daily Quality Control Report/ Daily Activity Log (DQCR) 01 45 00.3.10.1 & Appen. C	Visual and mechanical inspection & Electrical tests
2.11	Follow-Up Verification	33 71 02, 3.9.2	CQC-L4, SQDC-L4, D-L4, ER-L4	D-L4, ER-L4		Daily Quality Control Report/ Daily Activity Log (DQCR) 01 45 00.3.10.1 & Appen. C	Upon completion of acceptance checks and tests, show by demonstration in
3	**ACCEPTANCE**						
3.1	Provide as-built drawings and records of underground conduit and duct systems installation						
3.2	Final Follow-up Control Phase Inspection	01 45 00	CQC-L5, D-L5, ER-L5,	D-L5, ER-L5	provide agenda > 48 Hours prior to meeting	Final Follow-up Control Phase Inspection Checklist & Punch-Out	Final Follow-up Control Phase Inspection checklist & punch out items have been completed.

(1): A HOLD POINT is a mandatory requirement - advance notification and acceptance (verbal/written) is required prior to continuing work.

(2): A NOTIFY POINT requires advance notification prior to performing the activity.

(3): The DISTRICT/PQACT inspection form / checklist is to be completed by the Contractor and member of the District/PQACT prior to the start of work. The inspection form/ checklist shall show no incompletions.

LEVEL 1 = CONTINUOUS INSPECTION OF ACTIVITIES, LEVEL 2 = MONITOR CRITICAL ACTIVITIES AND WITNESS TESTING, LEVEL 3 = RANDOM INSPECTION AND/OR AT COMPLETION OF WORK, LEVEL 4 = REVIEW OF PRECONSTRUCTION DOCUMENTATION, LEVEL 5 - REVIEW OF FINAL DOCUMENTS

CQC = CONTRACTOR QUALITY CONTROL SDQC = SPECIALIZED DISCIPLINE D = DISTRICT/PQACT ER = ENGINEER OF RECORD MCT = MANUFACTURER CERTIFICATION/TESTING

Approved By District/PQACT QA Manager: *DRoy Moseley* ***Date:*** *26July2018*

INSPECTION / TEST PLAN (ITP)
C-43 WEST BASIN STORAGE RESERVOIR
CONTRACT NUMBER: CN XXXXXXXXXX
CIVIL WORKS

Location: Hendry County, FL
Date Prepared:
Revision:
Contractor: **Prepared By:**

INTERIOR DISTRIBUTION SYSTEM
Spec. Section: 26 20 00

Item No.	Attribute / Activity Description	Acceptance Criteria (Codes, Std., Spec., Drawings, Etc.)	INSPECTION REQUIREMENTS			Forms / Records / References (3)	Comments
			Inspect	Hold (1)	Notify (2)		
1	PRE-CONSTUCTION						
1.1	Contractor's Quality Control Plan, Site Health & Safety Plan and Permits	Quality Control 01 45 00, Safety Requirements 01 35 26, Permits & Fees 00 31 46	D-L4	D-L4		Plans and Permits	Plans have been submitted by Contractor and approved by the District/PQACT. All pemits have been obtained to begin work.
1.2	Preconstruction Submittals	Submittals 01 33 00 26 20 00	D-L4, ER-L4	D-L4, ER-L4		Transmittal 01 45 00.3.10.1. & Appen. C, Submittals 01 45 00.3.10.1. & Appen. C, Submittal Register	All preconstruction submittals for this DFOW shall be submitted by the Contractor and Approved by the District/PQACT.
1.3	Request For Information (RFIs)	Quality Control 01 45 00	D-L4, ER-L4	D-L4, ER-L4		Request for Information & Log 01 45 00.3.10.1 & Appen. C	All RFIs for this DFOW shall be answered in order to clear up any questions before work begins.
1.4	Work Plans	Quality Control 01 45 00	D-L4, ER-L4	D-L4, ER-L4		Plans	All work plans for this DFOW shall be submitted by the Contractor and approved by the District/PQACT.
1.5	Activity Hazard Analysis (AHA)	Safety Requirements 01 35 26	D-L4, ER-L4	D-L4, ER-L4		AHA 01 45 00.3.10.1 & Appen. C	The AHA for this DFOW have been submitted by the Contractor.
1.6	Previous Work Deficiencies & Non-Conformances of previous DFOW	Quality Control 01 45 00	CQC-L5, SDQC-L5, D-L5, ER-L5, MCT-L5	D-L4, ER-L4		Deficiency Logs and NCN Logs 01 45 00.3.10.1 & Appen. C	All deficiencies and non-conformances shall be corrected of previous work in order to avoid covering deficiencies.
1.7	Final Follow-up Control Phase Inspection of previous DFOW	Quality Control 01 45 00	CQC-L5, SDQC-L5, D-L5, ER-L5, MCT-L5	D-L4, ER-L4	48 Hours	Final Follow-up Control Phase Inspection Checklist & Punch-Out	Final Follow-up Control Phase Inspection checklist & punch out items shall be completed of previous work.
1.8	Preparatory Control Phase Inspection	Quality Control 01 45 00	CQC-L5, SDQC-L5, D-L5, ER-L5, MCT-L5	D-L4, ER-L4	48 Hours	Preparatory Control Phase Inspection Worksheet 01 45 00.3.10.1 & Appen. C	Preparatory Control Phase Inspection/Meeing shall be performed successfully without open issues.
2	CONSTRUCTION						
2.1	Initial Control Phase Inspection	01 45 00	CQC-L5, SDQC-L5, D-L5, ER-L5, MCT-L5	D-L4, ER-L4	48 Hours	Initial Control Phase Inspection Agenda 01 45 00.1.10.1.13, Initial Control Phase Inspection Checklist	
3	ACCEPTANCE						
3.1	300-Volt & 600-Volt Wiring Test	26 20 00	D-L4, ER-L4	D-L4, ER-L4		26 20 00,3.6.2	
3.2	Transformer Test	26 20 00	D-L4, ER-L4	D-L4, ER-L4		26 20 00,3.6.3	
3.3	Ground Fault Receptacle Test	26 20 00	D-L4, ER-L4	D-L4, ER-L4		26 20 00,3.6.4	

3.4	Phase Rotation Test	26 20 00	D-L4, ER-L4	D-L4, ER-L4		26 20 00,3.6.5	
3.5	Final Follow-up Control Phase Inspection	01 45 00	CQC-L6, D-L6, ER-L6,	D-L6, ER-L6	48 Hours	Final Follow-up Control Phase Inspection Checklist & Punch-Out	

(1): A HOLD POINT is a mandatory requirement - advance notification and acceptance (verbal/written) is required prior to continuing work.

(2): A NOTIFY POINT requires advance notification prior to performing the activity.

(3): The DISTRICT/PQACT inspection form / checklist is to be completed by the Contractor and member of the District/PQACT prior to the start of work. The inspection form/ checklist shall show no incompletions.

LEVEL 1 = CONTINUOUS INSPECTION OF ACTIVITIES, LEVEL 2 = MONITOR CRITICAL ACTIVITIES AND WITNESS TESTING, LEVEL 3 = RANDOM INSPECTION AND/OR AT COMPLETION OF WORK, LEVEL 4 = REVIEW OF PRECONSTRUCTION DOCUMENTATION, LEVEL 5 - REVIEW OF FINAL DOCUMENTS

CQC = CONTRACTOR QUALITY CONTROL SDQC = SPECIALIZED DISCIPLINE D = DISTRICT/PQACT ER = ENGINEER OF RECORD MCT = MANUFACTURER CERTIFICATION/TESTING

Approved By District/PQACT QA Manager: *DRoy Moseley* ***Date:*** *28July2018*

INSPECTION / TEST PLAN (ITP)
C-43 WEST BASIN STORAGE RESERVOIR
CONTRACT NUMBER: CN XXXXXXXXXX
CIVIL WORKS

Location: Hendry County, FL
Date Prepared:
Revision:
Contractor: **Prepared By:**

ARC FLASH STUDY - COORDINATED POWER SYSTEM PROTECTION
Spec. Section: 26 28 01.00 10

Item No.	Attribute / Activity Description	Acceptance Criteria (Codes, Std., Spec., Drawings, Etc.)	INSPECTION REQUIREMENTS			Forms / Records / References (3)	Comments
			Inspect	Hold (1)	Notify (2)		
1	PRE-CONSTUCTION						
1.1	Contractor's Quality Control Plan, Site Health & Safety Plan and Permits	Quality Control 01 45 00, Safety Requirements 01 35 26, Permits & Fees 00 31 46	D-L4	D-L4		Plans and Permits	Plans have been submitted by Contractor and approved by the District/PQACT. All pemits have been obtained to begin work.
1.2	Preconstruction Submittals	Submittals 01 33 00 26 28 01.00 10	D-L4, ER-L4	D-L4, ER-L4		Transmittal 01 45 00.3.10.1. & Appen. C, Submittals 01 45 00.3.10.1. & Appen. C, Submittal Register	All preconstruction submittals for this DFOW shall be submitted by the Contractor and Approved by the District/PQACT.
1.3	Request For Information (RFIs)	Quality Control 01 45 00	D-L4, ER-L4	D-L4, ER-L4		Request for Information & Log 01 45 00.3.10.1 & Appen. C	All RFIs for this DFOW shall be answered in order to clear up any questions before work begins.
1.4	Work Plans	Quality Control 01 45 00	D-L4, ER-L4	D-L4, ER-L4		Plans	All work plans for this DFOW shall be submitted by the Contractor and approved by the District/PQACT.
1.5	Activity Hazard Analysis (AHA)	Safety Requirements 01 35 26	D-L4, ER-L4	D-L4, ER-L4		AHA 01 45 00.3.10.1 & Appen. C	The AHA for this DFOW have been submitted by the Contractor.
1.6	Previous Work Deficiencies & Non-Conformances of previous DFOW	Quality Control 01 45 00	CQC-L5, SDQC-L5, D-L5, ER-L5, MCT-L5	D-L4, ER-L4		Deficiency Logs and NCN Logs 01 45 00.3.10.1 & Appen. C	All deficiencies and non-conformances shall be corrected of previous work in order to avoid covering deficiencies.
1.7	Final Follow-up Control Phase Inspection of previous DFOW	Quality Control 01 45 00	CQC-L5, SDQC-L5, D-L5, ER-L5, MCT-L5	D-L4, ER-L4	48 Hours	Final Follow-up Control Phase Inspection Checklist & Punch-Out	Final Follow-up Control Phase Inspection checklist & punch out items shall be completed of previous work.
1.8	Preparatory Control Phase Inspection	Quality Control 01 45 00	CQC-L5, SDQC-L5, D-L5, ER-L5, MCT-L5	D-L4, ER-L4	48 Hours	Preparatory Control Phase Inspection Worksheet 01 45 00.3.10.1 & Appen. C	Preparatory Control Phase Inspection/Meeing shall be performed successfully without open issues.
1.9	FIELD TESTING	26 28 01.00, 3.3	CQC-L4, SQDC-L4, D-L4, ER-L4	D-L4, ER-L4		Submittal	Prior to field tests, submit the proposed test plan consisting of complete field test procedure, tests to be performed, test equipment required, and tolerance limits, and complete testing and verification of the ground fault protection equipment, where used.
2	CONSTRUCTION						
1.1	Initial Control Phase Inspection	Quality Control 01 45 00, 3.7.2	CQC-L4, SDQC-L4, D-L4, ER-L4,	D-L4, ER-L4	provide agenda > 48 hours prior to meeting	Initial Control Phase Inspection Checklist 01 45 00.3.10.1, & Specifications Appendix C	An Initial Control Phase Inspection shall be performed shortly after the DFOW has begun to determine if the DFOW plan is working and if the workmanship of the workers is satisfactory and meets safety standards.
2.2	FIELD TESTING	26 28 01.00 10, 3.3	CQC-L4, SDQC-L4, D-L4, ER-L4,	D-L4, ER-L4		Submittal	Submit performance test reports in booklet form showing all field tests performed to adjust each component and all field tests performed to prove compliance with the specified performance criteria, upon completion and testing of the installed system. Each test report shall indicate the final position of controls.
2.3	General	26 28 01.00 10, 3.3.1	CQC-L2, SDQC-L2, D-L2, ER-L2,	D-L2, ER-L2	> days prior to testing- TBD	Daily Quality Control Report/ Daily Activity Log (DQCR) 01 45 00.3.10.1 & Specifications Appendix C	Perform field testing in the presence of the Construction Manager. Notify the Construction Manager days prior to conducting tests.

2.4	General	26 28 01.00 10, 3.3.1	CQC-L4, SDQC-L4, D-L4, ER-L4,	D-L4, ER-L4	> days prior to testing- TBD	Daily Quality Control Report/ Daily Activity Log (DQCR) 01 45 00.3.10.1 & Specifications Appendix C	Perform all tests and inspections recommended by the manufacturer unless specifically waived by the Construction Manager. Maintain a written record of all tests which includes date, test performed, personnel involved, devices tested, serial number, and name of test equipment, and test results.
2.5	Safety	26 28 01.00 10, 3.3.2	CQC-L4, SDQC-L4, D-L4, ER-L4,	D-L4, ER-L4	> days prior to testing- TBD	Daily Quality Control Report/ Daily Activity Log (DQCR) 01 45 00.3.10.1 & Specifications Appendix C	Provide and use safety devices such as rubber gloves, protective barriers, and danger signs to protect and warn personnel in the test vicinity. Replace any devices or equipment which are damaged due to improper test procedures or handling.
2.6	Molded-Case Circuit Breakers	26 28 01.00 10, 3.3.3	CQC-L4, SDQC-L4, D-L4, ER-L4,	D-L4, ER-L4	> days prior to testing- TBD	Daily Quality Control Report/ Daily Activity Log (DQCR) 01 45 00.3.10.1 & Specifications Appendix C	Circuit breakers shall be visually inspected, operated manually, and connections checked for tightness. Current ratings shall be verified and adjustable settings incorporated in accordance with the coordination study.
2.7	Power Circuit Breakers - General	26 28 01.00 10, 3.3.4.1	CQC-L4, SDQC-L4, D-L4, ER-L4,	D-L4, ER-L4	> days prior to testing- TBD	Daily Quality Control Report/ Daily Activity Log (DQCR) 01 45 00.3.10.1 & Specifications Appendix C	Visually inspect the circuit breaker and operate the circuit breaker manually; adjust and clean primary contacts in accordance with manufacturer's published instructions; check tolerances and clearances; check for proper lubrication; and ensure that all connections are tight.
2.8	Power Circuit Breakers - General	26 28 01.00 10, 3.3.4.1	CQC-L4, SDQC-L4, D-L4, ER-L4,	D-L4, ER-L4	> days prior to testing- TBD	Daily Quality Control Report/ Daily Activity Log (DQCR) 01 45 00.3.10.1 & Specifications Appendix C	For electrically operated circuit breakers, verify operating voltages on closing and tripping coils. Verify fuse ratings in control circuits; electrically operate the breaker, where applicable; and implement settings in accordance with the coordination study.
2.9	Power Circuit Breaker Tests	26 28 01.00 10, 3.3.4.2	CQC-L4, SDQC-L4, D-L4, ER-L4,	D-L4, ER-L4	> days prior to testing- TBD	Daily Quality Control Report/ Daily Activity Log (DQCR) 01 45 00.3.10.1 & Specifications Appendix C	The power circuit breakers shall be tested in accordance with NEMA C37.50.
2.10	Protective Relays	26 28 01.00 10, 3.3.5	CQC-L4, SDQC-L4, D-L4, ER-L4,	D-L4, ER-L4	> days prior to testing- TBD	Submittal	Protective relays shall be visually and mechanically inspected, adjusted, tested, and calibrated in accordance with the manufacturer's published instructions.
2.11	Protective Relays	26 28 01.00 10, 3.3.5	CQC-L4, SDQC-L4, D-L4, ER-L4,	D-L4, ER-L4	> days prior to testing- TBD	Submittal	Submit data including calibration and testing procedures and instructions pertaining to the frequency of calibration, inspection, adjustment, cleaning, and lubrication.
2.12	Protective Relays	26 28 01.00 10, 3.3.5	CQC-L4, SDQC-L4, D-L4, ER-L4,	D-L4, ER-L4	> days prior to testing- TBD	Daily Quality Control Report/ Daily Activity Log (DQCR) 01 45 00.3.10.1 & Specifications Appendix C	Tests shall include pick-up, timing, contact action, restraint, and other aspects necessary to ensure proper calibration and operation.
2.13	Protective Relays	26 28 01.00 10, 3.3.5	CQC-L4, SDQC-L4, D-L4, ER-L4,	D-L4, ER-L4	> days prior to testing- TBD	Daily Quality Control Report/ Daily Activity Log (DQCR) 01 45 00.3.10.1 & Specifications Appendix C	Relay settings shall be implemented in accordance with the coordination study. Relay contacts shall be manually or electrically operated to verify that the proper breakers and alarms initiate.
2.14	Protective Relays	26 28 01.00 10, 3.3.5	CQC-L4, SDQC-L4, D-L4, ER-L4,	D-L4, ER-L4	> days prior to testing- TBD	Submittal	Relaying current transformers shall be field tested in accordance with IEEE C57.13.
3	**ACCEPTANCE**						
3.1	Final Follow-up Control Phase Inspection	01 45 00, 3.9.3	CQC-L5, D-L5, ER-L5,	D-L5, ER-L5	provide agenda > 48 hours prior to	Final Follow-up Control Phase Inspection Checklist & Punch-Out 01 45 00.3.10.1 &	Final Follow-up Control Phase Inspection checklist & punch out items have been completed.
3.2	Warranty	01 61 03 EQUIPMENT AND MATERIALS	CQC-L5, D-L5, ER-L5,	D-L5, ER-L5		Submittal	The warranty shall meet the requirements specified in Section 01 61 03 EQUIPMENT AND MATERIALS.

(1): A HOLD POINT is a mandatory requirement - advance notification and acceptance (verbal/written) is required prior to continuing work.
(2): A NOTIFY POINT requires advance notification prior to performing the activity.
(3): The DISTRICT/PQACT inspection form / checklist is to be completed by the Contractor and member of the District/PQACT prior to the start of work. The inspection form/ checklist shall show no incompletions.

LEVEL 1 = CONTINUOUS INSPECTION OF ACTIVITIES, LEVEL 2 = MONITOR CRITICAL ACTIVITIES AND WITNESS TESTING, LEVEL 3 = RANDOM INSPECTION AND/OR AT COMPLETION OF WORK, LEVEL 4 = REVIEW OF PRECONSTRUCTION DOCUMENTATION, LEVEL 5 - REVIEW OF FINAL DOCUMENTS

CQC = CONTRACTOR QUALITY CONTROL SDQC = SPECIALIZED DISCIPLINE D = DISTRICT/PQACT ER = ENGINEER OF RECORD MCT = MANUFACTURER CERTIFICATION/TESTING

Approved By District/PQACT QA Manager: *DRoy Moseley* ***Date:*** *20July2018*

INSPECTION / TEST PLAN (ITP)
C-43 WEST BASIN STORAGE RESERVOIR
CONTRACT NUMBER: CN XXXXXXXXXX
CIVIL WORKS

Location: Hendry County, FL
Date Prepared:
Revision:
Contractor: **Prepared By:**

AUTOMATIC TRANSFER SWITCHES
Spec. Section: 26 28 21.00 40

Item No.	Attribute / Activity Description	Acceptance Criteria (Codes, Std., Spec., Drawings, Etc.)	INSPECTION REQUIREMENTS			Forms / Records / References (3)	Comments
			Inspect	Hold (1)	Notify (2)		
1	PRE-CONSTUCTION						
1.1	Contractor's Quality Control Plan, Site Health & Safety Plan and Permits	Quality Control 01 45 00, Safety Requirements 01 35 26, Permits & Fees 00 31 46	D-L4	D-L4		Plans and Permits	Plans have been submitted by Contractor and approved by the District/PQACT. All pemits have been obtained to begin work.
1.2	Preconstruction Submittals	Submittals 01 33 00 26 28 21.00 40	D-L4, ER-L4	D-L4, ER-L4		Transmittal 01 45 00.3.10.1. & Appen. C, Submittals 01 45 00.3.10.1. & Appen. C, Submittal Register	All preconstruction submittals for this DFOW shall be submitted by the Contractor and Approved by the District/PQACT.
1.3	Request For Information (RFIs)	Quality Control 01 45 00	D-L4, ER-L4	D-L4, ER-L4		Request for Information & Log 01 45 00.3.10.1 & Appen. C	All RFIs for this DFOW shall be answered in order to clear up any questions before work begins.
1.4	Work Plans	Quality Control 01 45 00	D-L4, ER-L4	D-L4, ER-L4		Plans	All work plans for this DFOW shall be submitted by the Contractor and approved by the District/PQACT.
1.5	Activity Hazard Analysis (AHA)	Safety Requirements 01 35 26	D-L4, ER-L4	D-L4, ER-L4		AHA 01 45 00.3.10.1 & Appen. C	The AHA for this DFOW have been submitted by the Contractor.
1.6	Previous Work Deficiencies & Non-Conformances of previous DFOW	Quality Control 01 45 00	CQC-L5, SDQC-L5, D-L5, ER-L5, MCT-L5	D-L4, ER-L4		Deficiency Logs and NCN Logs 01 45 00.3.10.1 & Appen. C	All deficiencies and non-conformances shall be corrected of previous work in order to avoid covering deficiencies.
1.7	Final Follow-up Control Phase Inspection of previous DFOW	Quality Control 01 45 00	CQC-L5, SDQC-L5, D-L5, ER-L5, MCT-L5	D-L4, ER-L4	48 Hours	Final Follow-up Control Phase Inspection Checklist & Punch-Out	Final Follow-up Control Phase Inspection checklist & punch out items shall be completed of previous work.
1.8	Preparatory Control Phase Inspection	Quality Control 01 45 00	CQC-L5, SDQC-L5, D-L5, ER-L5, MCT-L5	D-L4, ER-L4	48 Hours	Preparatory Control Phase Inspection Worksheet 01 45 00.3.10.1 & Appen. C	Preparatory Control Phase Inspection/Meeing shall be performed successfully without open issues.
2	CONSTRUCTION						
2.1	Initial Control Phase Inspection	01 45 00, 3.7.2	CQC-L5, SDQC-L5, D-L5, ER-L5,	D-L5, ER-L5	provide agenda > 48 hours prior to meeting	Initial Control Phase Inspection Checklist 01 45 00.3.10.1, & Specifications Appendix C	An Initial Control Phase Inspection shall be performed shortly after the DFOW has begun to determine if the DFOW plan is working and if the workmanship of the workers is satisfactory and meets safety standards.
2.2	INSTALLATION - manufacturer's installation instructions	Automatic Transfer Switch 26 28 21.00 40, 3.1	CQC-L1, SDQC-L1, D-L1, ER-L1	D-L1, ER-L1		Daily Quality Control Report/ Daily Activity Log (DQCR) 01 45 00.3.10.1 & Specifications Appendix C	Install automatic transfer switch as indicated, and in accordance with the manufacturer's installation instructions.
2.3	Submit listing of product installations for automatic transfer switches	Automatic Transfer Switch 26 28 21.00 40, 3.1	CQC-L5, SDQC-L5, D-L5, ER-L5,	D-L5, ER-L5		Daily Quality Control Report/ Daily Activity Log (DQCR) 01 45 00.3.10.1 & Specifications Appendix C	Submit listing of product installations for automatic transfer switches showing the manufacturer has successfully manufactured automatic transfer switches of the size specified for a minimum period of 10 years. Include on the list, purchaser, address of installation, service organization, and date of installation.
2.4	FIELD QUALITY CONTROL	Automatic Transfer Switch 26 28 21.00 40, 3.2	CQC-L3, SDQC-L3, D-L3, ER-L3,	D-L3, ER-L3		Daily Quality Control Report/ Daily Activity Log (DQCR) 01 45 00.3.10.1 & Specifications Appendix C	Demonstrate the automatic transfer switch operates in accordance with the specification requirements in conjunction with the normal and emergency power sources.

3	ACCEPTANCE						
3.1	Final Follow-up Control Phase Inspection	01 45 00, 3.9.3	CQC-L5, D-L5, ER-L5,	D-L5, ER-L5	provide agenda > 48 hours prior to meeting	Final Follow-up Control Phase Inspection Checklist & Punch-Out 01 45 00.3.10.1 & Specifications Appendix C	Final Follow-up Control Phase Inspection checklist & punch out items have been completed.
3.2	Warranty	01 61 03 EQUIPMENT AND MATERIALS	CQC-L5, D-L5, ER-L5,	D-L5, ER-L5		Submittal	The warranty shall meet the requirements specified in Section 01 61 03 EQUIPMENT AND MATERIALS.

(1): A HOLD POINT is a mandatory requirement - advance notification and acceptance (verbal/written) is required prior to continuing work.

(2): A NOTIFY POINT requires advance notification prior to performing the activity.

(3): The DISTRICT/PQACT inspection form / checklist is to be completed by the Contractor and member of the District/PQACT prior to the start of work. The inspection form/ checklist shall show no incompletions.

LEVEL 1 = CONTINUOUS INSPECTION OF ACTIVITIES, LEVEL 2 = MONITOR CRITICAL ACTIVITIES AND WITNESS TESTING, LEVEL 3 = RANDOM INSPECTION AND/OR AT COMPLETION OF WORK, LEVEL 4 = REVIEW OF PRECONSTRUCTION DOCUMENTATION, LEVEL 5 - REVIEW OF FINAL DOCUMENTS

CQC = CONTRACTOR QUALITY CONTROL SDQC = SPECIALIZED DISCIPLINE D = DISTRICT/PQACT ER = ENGINEER OF RECORD MCT = MANUFACTURER CERTIFICATION/TESTING

Approved By District/PQACT QA Manager: *DRoy Moseley* ***Date:*** *20June2018*

INSPECTION / TEST PLAN (ITP)
C-43 WEST BASIN STORAGE RESERVOIR
CONTRACT NUMBER: CN XXXXXXXXXX
CIVIL WORKS

Location: Hendry County, FL
Date Prepared:
Revision:
Contractor: **Prepared By:**

STANDBY GENERATOR & LPG SYSTEM INSTALLATION
Spec. Section: 26 32 15

Item No.	Attribute / Activity Description	Acceptance Criteria (Codes, Std., Spec., Drawings, Etc.)	INSPECTION REQUIREMENTS			Forms / Records / References (3)	Comments
			Inspect	Hold (1)	Notify (2)		
1	PRE-CONSTUCTION						
1.1	Contractor's Quality Control Plan, Site Health & Safety Plan and Permits	Quality Control 01 45 00, Safety Requirements 01 35 26,	D-L4	D-L4		Plans and Permits	Plans have been submitted by Contractor and approved by the District/PQACT. All pemits have been obtained to
1.2	Preconstruction Submittals	Submittals 01 33 00 26 32 15	D-L4, ER-L4	D-L4, ER-L4		Transmittal 01 45 00.3.10.1. & Appen. C, Submittals 01 45 00.3.10.1. & Appen. C, Submittal Register	All preconstruction submittals for this DFOW shall be submitted by the Contractor and Approved by the District/PQACT.
1.3	Request For Information (RFIs)	Quality Control 01 45 00	D-L4, ER-L4	D-L4, ER-L4		Request for Information & Log 01 45 00.3.10.1 & Appen. C	All RFIs for this DFOW shall be answered in order to clear up any questions before work begins.
1.4	Work Plans	Quality Control 01 45 00	D-L4, ER-L4	D-L4, ER-L4		Plans	All work plans for this DFOW shall be submitted by the Contractor and approved by the District/PQACT.
1.5	Activity Hazard Analysis (AHA)	Safety Requirements 01 35 26	D-L4, ER-L4	D-L4, ER-L4		AHA 01 45 00.3.10.1 & Appen. C	The AHA for this DFOW have been submitted by the Contractor.
1.6	Previous Work Deficiencies & Non-Conformances of previous DFOW	Quality Control 01 45 00	CQC-L5, SDQC-L5, D-L5, ER-L5, MCT-L5	D-L4, ER-L4		Deficiency Logs and NCN Logs 01 45 00.3.10.1 & Appen. C	All deficiencies and non-conformances shall be corrected of previous work in order to avoid covering deficiencies.
1.7	Final Follow-up Control Phase Inspection of previous DFOW	Quality Control 01 45 00	CQC-L5, SDQC-L5, D-L5, ER-L5, MCT-L5	D-L4, ER-L4	48 Hours	Final Follow-up Control Phase Inspection Checklist & Punch-Out	Final Follow-up Control Phase Inspection checklist & punch out items shall be completed of previous work.
1.8	Preparatory Control Phase Inspection	Quality Control 01 45 00	CQC-L5, SDQC-L5, D-L5, ER-L5, MCT-L5	D-L4, ER-L4	48 Hours	Preparatory Control Phase Inspection Worksheet 01 45 00.3.10.1 & Appen. C	Preparatory Control Phase Inspection/Meeing shall be performed successfully without open issues.
2	CONSTRUCTION						
2.1	Initial Control Phase Inspection	01 45 00	CQC-L5, SDQC-L5, D-L5, ER-L5, MCT-L5	D-L4, ER-L4	48 Hours	Initial Control Phase Inspection Agenda 01 45 00.1.10.1.13, Initial Control Phase Inspection Checklist	An Initial Control Phase Inspection shall be performed shortly after the DFOW has begun to determine if the DFOW plan is working and if the workmanship of the workers is satisfactory and meets safety standards.
2.2	Daily Follow-up Control Phase Inspections	01 45 00	CQC-L1			Daily Quality Control Report/ Daily Activity Log (DQCR) 01 45 00.3.10.1 & Appen. C	Contractor to perform daily Follow-up Control Phase Inspections and document findings on DQCR.
2.3	Pressure & Leakage Tests	26 32 15,3.4	D-L4, ER-L4	D-L4, ER-L4		Transmittal 01 45 00.3.10.1. & Appen. C, Submittals 01 45 00.3.10.1. & Appen. C, D Submittal Register	Prior to acceptance all components of the LPG fuel system shall be inspected, and pressure tested, to determine that the system is acceptable for operation as required by the FDACS and all other applicable local, state, and federal agencies.
2.4	Tightness, Operation, and Unit Heat Pump Vibration	26 32 15,3.5	D-L4, ER-L4	D-L4, ER-L4		Transmittal 01 45 00.3.10.1. & Appen. C, Submittals 01 45 00.3.10.1. & Appen. C, D Submittal Register	Test equipment and installation to verify tightness, operation, and unit heat pump vibration is within manufacturer's submitted maximum.
2.5	Performance and Balance	26 32 15,3.5	D-L4, ER-L4	D-L4, ER-L4		Transmittal 01 45 00.3.10.1. & Appen. C, Submittals 01 45 00.3.10.1. & Appen. C, D Submittal Register	Test equipment performance and balance equipment as specified in Section 23 05 93 TESTING, ADJUSTING, AND BALANCING FOR HVAC.
3	ACCEPTANCE						
3.1	WARRANTY	26 32 15, 1.7	D-L4, ER-L4	D-L4, ER-L4		Transmittal 01 45 00.3.10.1. & Appen. C, Submittals 01 45 00.3.10.1. & Appen. C, D Submittal Register	The warranty shall meet the requirements specified in Section 01 61 03 EQUIPMENT AND MATERIALS.

3.2	Operation & Maintenance Manuals	26 32 15, 3.5.1	D-L4, ER-L4	D-L4, ER-L4		Transmittal 01 45 00.3.10.1. & Appen. C, Submittals 01 45 00.3.10.1. & Appen. C, D Submittal Register	Submit six manuals at least 2 weeks prior to field training.
3.3	Operation and Maintenance Training	26 32 15, 3.5.2	D-L4, ER-L4	D-L4, ER-L4		Transmittal 01 45 00.3.10.1. & Appen. C, Submittals 01 45 00.3.10.1. & Appen. C, D Submittal Register	Conduct a training course for the members of the operating staff as designated by the District.
3.4	Final Follow-up Control Phase Inspection	01 45 00	CQC-L6, D-L6, ER-L6,	D-L6, ER-L6	48 Hours	Final Follow-up Control Phase Inspection Checklist & Punch-Out	Final Follow-up Control Phase Inspection checklist & punch out items have been completed.

(1): A HOLD POINT is a mandatory requirement - advance notification and acceptance (verbal/written) is required prior to continuing work.

(2): A NOTIFY POINT requires advance notification prior to performing the activity.

(3): The DISTRICT/PQACT inspection form / checklist is to be completed by the Contractor and member of the District/PQACT prior to the start of work. The inspection form/ checklist shall show no incompletions.

LEVEL 1 = CONTINUOUS INSPECTION OF ACTIVITIES, LEVEL 2 = MONITOR CRITICAL ACTIVITIES AND WITNESS TESTING, LEVEL 3 = RANDOM INSPECTION AND/OR AT COMPLETION OF WORK, LEVEL 4 = REVIEW OF PRECONSTRUCTION DOCUMENTATION, LEVEL 5 - REVIEW OF FINAL DOCUMENTS

CQC = CONTRACTOR QUALITY CONTROL SDQC = SPECIALIZED DISCIPLINE D = DISTRICT/PQACT ER = ENGINEER OF RECORD MCT = MANUFACTURER CERTIFICATION/TESTING

Approved By District/PQACT QA Manager: *DRoy Moseley* ***Date:*** *26July2018*

INSPECTION / TEST PLAN (ITP)
C-43 WEST BASIN STORAGE RESERVOIR
CONTRACT NUMBER: CN XXXXXXXXXX
CIVIL WORKS

Location: Hendry County, FL

Date Prepared:

Revision:

Contractor: **Prepared By:**

LIGHTNING PROTECTION
Spec. Section: 26 41 00

Item No.	Attribute / Activity Description	Acceptance Criteria (Codes, Std., Spec., Drawings, Etc.)	INSPECTION REQUIREMENTS			Forms / Records / References (3)	Comments
			Inspect	Hold (1)	Notify (2)		
1	PRE-CONSTRUCTION						
1.1	Contractor's Quality Control Plan, Site Health & Safety Plan and Permits	Quality Control 01 45 00, Safety Requirements 01 35 26, Permits & Fees 00 31 46	D-L4	D-L4		Plans and Permits	Plans have been submitted by Contractor and approved by the District/PQACT. All pemits have been obtained to begin work.
1.2	Preconstruction Submittals	Submittals 01 33 00 26 41 00	D-L4, ER-L4	D-L4, ER-L4		Transmittal 01 45 00.3.10.1. & Appen. C, Submittals 01 45 00.3.10.1. & Appen. C, Submittal Register	All preconstruction submittals for this DFOW shall be submitted by the Contractor and Approved by the District/PQACT.
1.3	Request For Information (RFIs)	Quality Control 01 45 00	D-L4, ER-L4	D-L4, ER-L4		Request for Information & Log 01 45 00.3.10.1 & Appen. C	All RFIs for this DFOW shall be answered in order to clear up any questions before work begins.
1.4	Work Plans	Quality Control 01 45 00	D-L4, ER-L4	D-L4, ER-L4		Plans	All work plans for this DFOW shall be submitted by the Contractor and approved by the District/PQACT.
1.5	Activity Hazard Analysis (AHA)	Safety Requirements 01 35 26	D-L4, ER-L4	D-L4, ER-L4		AHA 01 45 00.3.10.1 & Appen. C	The AHA for this DFOW have been submitted by the Contractor.
1.6	Previous Work Deficiencies & Non-Conformances of previous DFOW	Quality Control 01 45 00	CQC-L5, SDQC-L5, D-L5, ER-L5, MCT-L5	D-L4, ER-L4		Deficiency Logs and NCN Logs 01 45 00.3.10.1 & Appen. C	All deficiencies and non-conformances shall be corrected of previous work in order to avoid covering deficiencies.
1.7	Final Follow-up Control Phase Inspection of previous DFOW	Quality Control 01 45 00	CQC-L5, SDQC-L5, D-L5, ER-L5, MCT-L5	D-L4, ER-L4	48 Hours	Final Follow-up Control Phase Inspection Checklist & Punch-Out	Final Follow-up Control Phase Inspection checklist & punch out items shall be completed of previous work.
1.8	Preparatory Control Phase Inspection	Quality Control 01 45 00	CQC-L5, SDQC-L5, D-L5, ER-L5, MCT-L5	D-L4, ER-L4	48 Hours	Preparatory Control Phase Inspection Worksheet 01 45 00.3.10.1 & Appen. C	Preparatory Control Phase Inspection/Meeing shall be performed successfully without open issues.
2	CONSTRUCTION						
2.1	Initial Control Phase Inspection	01 45 00	CQC-L5, SDQC-L5, D-L5, ER-L5, MCT-L5	D-L5, ER-L5	provide agenda > 48 Hours prior to meeting	Initial Control Phase Inspection Agenda 01 45 00.1.10.1.13, Initial Control Phase Inspection Checklist	An Initial Control Phase Inspection shall be performed shortly after the DFOW has begun to determine if the DFOW plan is working and if the workmanship of the workers is satisfactory and meets safety standards.
2.2	Daily Follow-up Control Phase Inspections	01 45 00	CQC-L1			Daily Quality Control Report/ Daily Activity Log (DQCR) 01 45 00.3.10.1 & Appen. C	Contractor to perform daily Follow-up Control Phase Inspections and document findings on DQCR.
2.3	SITE CONDITIONS	26 41 00, 1.5	CQC-L3, SDQC-L35, D-L35, ER-L3, MCT-L3	D-L3, ER-L3		Daily Quality Control Report/ Daily Activity Log (DQCR) 01 45 00.3.10.1 & Appen. C	Confirm all details of work, verify all dimensions in field, and advise Construction Manager of any discrepancy before performing work. Obtain prior approval of Construction Manager before changing the design
2.4	Grounding Electrodes	26 41 00, 3.1.4	CQC-L3, SDQC-L35, D-L35, ER-L3, MCT-L3	D-L3, ER-L3		Daily Quality Control Report/ Daily Activity Log (DQCR) 01 45 00.3.10.1 & Appen. C	Contact the Construction Manager for direction on how to proceed when two of any three ground rods, driven not less than 10 feet into the ground, a minimum of 10 feet apart, and equally spaced around the perimeter, give a combined value exceeding 50 ohms immediately after having driven.
3	ACCEPTANCE						
3.1	Lightning Protection & Grounding System Test Results	26 41 00, 3.5.1	D-L5, ER-L5			Transmittal 01 45 00.3.10.1. & Appen. C, Submittals 01 45 00.3.10.1. & Appen. C, D Submittal Register	Submit results of each test to the Construction Manager.

3.2	WARRANTY	26 41 00, 1.6	D-L5, ER-L5			Transmittal 01 45 00.3.10.1. & Appen. C, Submittals 01 45 00.3.10.1. & Appen. C, D Submittal Register	The warranty shall meet the requirements specified in Section 01 61 03 EQUIPMENT AND MATERIALS.
3.3	Final Follow-up Control Phase Inspection	01 45 00	CQC-L5, D-L5, ER-L5,	D-L5, ER-L5	provide agenda > 48 Hours prior to meeting	Final Follow-up Control Phase Inspection Checklist & Punch-Out	Final Follow-up Control Phase Inspection checklist & punch out items have been completed.

(1): A HOLD POINT is a mandatory requirement - advance notification and acceptance (verbal/written) is required prior to continuing work.

(2): A NOTIFY POINT requires advance notification prior to performing the activity.

(3): The DISTRICT/PQACT inspection form / checklist is to be completed by the Contractor and member of the District/PQACT prior to the start of work. The inspection form/ checklist shall show no incompletions.

LEVEL 1 = CONTINUOUS INSPECTION OF ACTIVITIES, LEVEL 2 = MONITOR CRITICAL ACTIVITIES AND WITNESS TESTING, LEVEL 3 = RANDOM INSPECTION AND/OR AT COMPLETION OF WORK, LEVEL 4 = REVIEW OF PRECONSTRUCTION DOCUMENTATION, LEVEL 5 - REVIEW OF FINAL DOCUMENTS

CQC = CONTRACTOR QUALITY CONTROL SDQC = SPECIALIZED DISCIPLINE D = DISTRICT/PQACT ER = ENGINEER OF RECORD MCT = MANUFACTURER CERTIFICATION/TESTING

Approved By District/PQACT QA Manager: *DRoy Moseley* ***Date:*** *26July2018*

INSPECTION / TEST PLAN (ITP)
C-43 WEST BASIN STORAGE RESERVOIR
CONTRACT NUMBER: CN XXXXXXXXXX
CIVIL WORKS

Location: Hendry County, FL

Date Prepared:

Revision:

Contractor: **Prepared By:**

CATHODIC PROTECTION
Spec. Section: 26 42 14

Item No.	Attribute / Activity Description	Acceptance Criteria (Codes, Std., Spec., Drawings, Etc.)	INSPECTION REQUIREMENTS			Forms / Records / References (3)	Comments
			Inspect	Hold (1)	Notify (2)		
1	PRE-CONSTRUCTION						
1.1	Contractor's Quality Control Plan, Site Health & Safety Plan and Permits	Quality Control 01 45 00, Safety Requirements 01 35 26, Permits & Fees 00 31 46	D-L4	D-L4		Plans and Permits	Plans have been submitted by Contractor and approved by the District/PQACT. All pemits have been obtained to begin work.
1.2	Preconstruction Submittals	Submittals 01 33 00 26 42 14	D-L4, ER-L4	D-L4, ER-L4		Transmittal 01 45 00.3.10.1. & Appen. C, Submittals 01 45 00.3.10.1. & Appen. C, Submittal Register	All preconstruction submittals for this DFOW shall be submitted by the Contractor and Approved by the District/PQACT.
1.3	Request For Information (RFIs)	Quality Control 01 45 00	D-L4, ER-L4	D-L4, ER-L4		Request for Information & Log 01 45 00.3.10.1 & Appen. C	All RFIs for this DFOW shall be answered in order to clear up any questions before work begins.
1.4	Work Plans	Quality Control 01 45 00	D-L4, ER-L4	D-L4, ER-L4		Plans	All work plans for this DFOW shall be submitted by the Contractor and approved by the District/PQACT.
1.5	Activity Hazard Analysis (AHA)	Safety Requirements 01 35 26	D-L4, ER-L4	D-L4, ER-L4		AHA 01 45 00.3.10.1 & Appen. C	The AHA for this DFOW have been submitted by the Contractor.
1.6	Previous Work Deficiencies & Non-Conformances of previous DFOW	Quality Control 01 45 00	CQC-L5, SDQC-L5, D-L5, ER-L5, MCT-L5	D-L4, ER-L4		Deficiency Logs and NCN Logs 01 45 00.3.10.1 & Appen. C	All deficiencies and non-conformances shall be corrected of previous work in order to avoid covering deficiencies.
1.7	Final Follow-up Control Phase Inspection of previous DFOW	Quality Control 01 45 00	CQC-L5, SDQC-L5, D-L5, ER-L5, MCT-L5	D-L4, ER-L4	48 Hours	Final Follow-up Control Phase Inspection Checklist & Punch-Out	Final Follow-up Control Phase Inspection checklist & punch out items shall be completed of previous work.
1.8	Preparatory Control Phase Inspection	Quality Control 01 45 00	CQC-L5, SDQC-L5, D-L5, ER-L5, MCT-L5	D-L4, ER-L4	48 Hours	Preparatory Control Phase Inspection Worksheet 01 45 00.3.10.1 & Appen. C	Preparatory Control Phase Inspection/Meeing shall be performed successfully without open issues.
2	CONSTRUCTION						
2.1	Initial Control Phase Inspection	01 45 00	CQC-L5, SDQC-L5, D-L5, ER-L5, MCT-L5	D-L5, ER-L5	provide agenda > 48 Hours prior to meeting	Initial Control Phase Inspection Agenda 01 45 00.1.10.1.13, Initial Control Phase Inspection Checklist	An Initial Control Phase Inspection shall be performed shortly after the DFOW has begun to determine if the DFOW plan is working and if the workmanship of the workers is satisfactory and meets safety standards.
2.2	Daily Follow-up Control Phase Inspections	01 45 00	CQC-L1			Daily Quality Control Report/ Daily Activity Log (DQCR) 01 45 00.3.10.1 & Appen. C	Contractor to perform daily Follow-up Control Phase Inspections and document findings on DQCR.
2.3	Electrical Potential measurements	26 42 14, 2.14 and 3.5.1	CQC-L1, D-L2, ER-L2	D-L2	provide PQACT >5 days notice of each test	Daily Quality Control Report/ Daily Activity Log (DQCR) 01 45 00.3.10.1 & Appen. C	All measurements shall be witness by CM
2.4	Stray current measurements	26 42 14, 2.3.10	CQC-L2, D-L2			Daily Quality Control Report/ Daily Activity Log (DQCR) 01 45 00.3.10.1 & Appen. C	perform test at each test station
2.5	Inspection of Pipe coatings	26 42 14, 2.3.12.2	CQC-L2, D-L2			Daily Quality Control Report/ Daily Activity Log (DQCR) 01 45 00.3.10.1 & Appen. C	perform electric holiday test for any repair areas
2.6	Cathodic protection testing including isolation testing, anode output measurements, and interference testing	26 42 14, 3.1.1 and 3.5	CQC-L2, D-L2			Daily Quality Control Report/ Daily Activity Log (DQCR) 01 45 00.3.10.1 & Appen. C	
3	ACCEPTANCE						
3.1	Final test results of the cathodic protection system	26 42 14, 3.7	CQC-L5, D-L5, ER-L5, SDQC-L5	D-L5, ER-L5		Submittal	Test report shall provide a narrative describing how the criteria of protection is achieved without damaging other pipes or structures in the area.
3.2	O&M Manuals, including as-built drawings	26 42 14, 2.1	D-L5, ER-L5	D-L5, ER-L5		Submittal	Submit for the District/PQACT approval

3.3	Training Course	26 42 14, 3.6				Submittal	Contractor shall conduct a training course for the DISTRICT'S operations staff
3.4	Final Follow-up Control Phase Inspection	01 45 00	CQC-L5,D-L5, ER-L5	D-L5, ER-L5	provide agenda > 48 Hours prior to meeting	Final Follow-up Control Phase Inspection Checklist & Punch-Out	Final Follow-up Control Phase Inspection checklist & punch out items have been completed.

(1): A HOLD POINT is a mandatory requirement - advance notification and acceptance (verbal/written) is required prior to continuing work.

(2): A NOTIFY POINT requires advance notification prior to performing the activity.

(3): The DISTRICT/PQACT inspection form / checklist is to be completed by the Contractor and member of the District/PQACT prior to the start of work. The inspection form/ checklist shall show no incompletions.

LEVEL 1 = CONTINUOUS INSPECTION OF ACTIVITIES, LEVEL 2 = MONITOR CRITICAL ACTIVITIES AND WITNESS TESTING, LEVEL 3 = RANDOM INSPECTION AND/OR AT COMPLETION OF WORK, LEVEL 4 = REVIEW OF PRECONSTRUCTION DOCUMENTATION, LEVEL 5 - REVIEW OF FINAL DOCUMENTS

CQC = CONTRACTOR QUALITY CONTROL SDQC = SPECIALIZED DISCIPLINE D = DISTRICT/PQACT ER = ENGINEER OF RECORD MCT = MANUFACTURER CERTIFICATION/TESTING

Approved By District/PQACT QA Manager: *DRoy Moseley* ***Date:*** *26July2018*

INSPECTION / TEST PLAN (ITP)
C-43 WEST BASIN STORAGE RESERVOIR
CONTRACT NUMBER: CN XXXXXXXXXX
CIVIL WORKS

Location: Hendry County, FL
Date Prepared:
Revision:
Contractor: **Prepared By:**

INTERIOR LIGHTING
Spec. Section: 26 51 00.00 40

Item No.	Attribute / Activity Description	Acceptance Criteria (Codes, Std., Spec., Drawings, Etc.)	INSPECTION REQUIREMENTS			Forms / Records / References (3)	Comments
			Inspect	Hold (1)	Notify (2)		
1	PRE-CONSTRUCTION						
1.1	Contractor's Quality Control Plan, Site Health & Safety Plan and Permits	Quality Control 01 45 00, Safety Requirements 01 35 26, Permits & Fees 00 31 46	D-L4	D-L4		Plans and Permits	Plans have been submitted by Contractor and approved by the District/PQACT. All pemits have been obtained to begin work.
1.2	Preconstruction Submittals	Submittals 01 33 00 26 51 00.00 40	D-L4, ER-L4	D-L4, ER-L4		Transmittal 01 45 00.3.10.1. & Appen. C, Submittals 01 45 00.3.10.1. & Appen. C, Submittal Register	All preconstruction submittals for this DFOW shall be submitted by the Contractor and Approved by the District/PQACT.
1.3	Request For Information (RFIs)	Quality Control 01 45 00	D-L4, ER-L4	D-L4, ER-L4		Request for Information & Log 01 45 00.3.10.1 & Appen. C	All RFIs for this DFOW shall be answered in order to clear up any questions before work begins.
1.4	Work Plans	Quality Control 01 45 00	D-L4, ER-L4	D-L4, ER-L4		Plans	All work plans for this DFOW shall be submitted by the Contractor and approved by the District/PQACT.
1.5	Activity Hazard Analysis (AHA)	Safety Requirements 01 35 26	D-L4, ER-L4	D-L4, ER-L4		AHA 01 45 00.3.10.1 & Appen. C	The AHA for this DFOW have been submitted by the Contractor.
1.6	Previous Work Deficiencies & Non-Conformances of previous DFOW	Quality Control 01 45 00	CQC-L5, SDQC-L5, D-L5, ER-L5, MCT-L5	D-L4, ER-L4		Deficiency Logs and NCN Logs 01 45 00.3.10.1 & Appen. C	All deficiencies and non-conformances shall be corrected of previous work in order to avoid covering deficiencies.
1.7	Final Follow-up Control Phase Inspection of previous DFOW	Quality Control 01 45 00	CQC-L5, SDQC-L5, D-L5, ER-L5, MCT-L5	D-L4, ER-L4	48 Hours	Final Follow-up Control Phase Inspection Checklist & Punch-Out	Final Follow-up Control Phase Inspection checklist & punch out items shall be completed of previous work.
1.8	Preparatory Control Phase Inspection	Quality Control 01 45 00	CQC-L5, SDQC-L5, D-L5, ER-L5, MCT-L5	D-L4, ER-L4	48 Hours	Preparatory Control Phase Inspection Worksheet 01 45 00.3.10.1 & Appen. C	Preparatory Control Phase Inspection/Meeing shall be performed successfully without open issues.
2	CONSTRUCTION						
2.1	Initial Control Phase Inspection	01 45 00	CQC-L5, SDQC-L5, D-L5, ER-L5, MCT-L5	D-L5, ER-L5	provide agenda > 48 Hours prior to meeting	Initial Control Phase Inspection Agenda 01 45 00.1.10.1.13, Initial Control Phase Inspection Checklist	An Initial Control Phase Inspection shall be performed shortly after the DFOW has begun to determine if the DFOW plan is working and if the workmanship of the workers is satisfactory and meets safety standards.
2.2	Daily Follow-up Control Phase Inspections	01 45 00	CQC-L1			Daily Quality Control Report/ Daily Activity Log (DQCR) 01 45 00.3.10.1 & Appen. C	Contractor to perform daily Follow-up Control Phase Inspections and document findings on DQCR.
2.3	INSTALLATION	26 51 00.00 40, 3.2	CQC-L1, SDQC-L1, D-L1, ER-L1	D-L1, ER-L1		Daily Quality Control Report/ Daily Activity Log (DQCR) 01 45 00.3.10.1 & Appen. C	Ensure all electrical installations conform to IEEE C2, NFPA 70, and to the requirements specified
2.4	FIELD QUALITY CONTROL - Operational Testing	26 51 00.00 40, 3.3	CQC-L1, SDQC-L1, D-L1, ER-L1	D-L1, ER-L1		Daily Quality Control Report/ Daily Activity Log (DQCR) 01 45 00.3.10.1 & Appen. C	Upon completion of installation, verify that equipment is properly installed, connected, and adjusted. Conduct an operating test to show that equipment operates in accordance with requirements of this section.
2.5	FIELD TESTING	26 51 00.00 40, 3.4	CQC-L5, SDQC-L5, D-L5, ER-L5, MCT-L5	D-L5, ER-L5		Daily Quality Control Report/ Daily Activity Log (DQCR) 01 45 00.3.10.1 & Appen. C	Demonstrate that all LED lighting fixtures and their accessories, including lowering devices, operate satisfactorily in the presence of the Construction Manager.
3	ACCEPTANCE						
3.1	MAINTENANCE - O&M Data	26 51 00.00 40, 3.5	CQC-L5,D-L5, ER-L5	D-L5, ER-L5		Daily Quality Control Report/ Daily Activity Log (DQCR) 01 45 00.3.10.1 & Appen. C	Submit operation and maintenance data in accordance with Section 01 78 05 OPERATION AND MAINTENANCE INFORMATION and as specified.

3.2	MAINTENANCE - Documentation	26 51 00.00 40, 3.5	CQC-L5,D-L5, ER-L5	D-L5, ER-L5		Daily Quality Control Report/ Daily Activity Log (DQCR) 01 45 00.3.10.1 & Appen. C	Submit documentation that includes contact information, summary of procedures, and the limitations and conditions applicable to the project. Indicate manufacturer's commitment to reclaim materials for recycling and/or reuse.
3.3	Final Follow-up Control Phase Inspection	01 45 00	CQC-L5,D-L5, ER-L5	D-L5, ER-L5	provide agenda > 48 Hours prior to meeting	Final Follow-up Control Phase Inspection Checklist & Punch-Out	Final Follow-up Control Phase Inspection checklist & punch out items have been completed.

(1): A HOLD POINT is a mandatory requirement - advance notification and acceptance (verbal/written) is required prior to continuing work.

(2): A NOTIFY POINT requires advance notification prior to performing the activity.

(3): The DISTRICT/PQACT inspection form / checklist is to be completed by the Contractor and member of the District/PQACT prior to the start of work. The inspection form/ checklist shall show no incompletions.

LEVEL 1 = CONTINUOUS INSPECTION OF ACTIVITIES, LEVEL 2 = MONITOR CRITICAL ACTIVITIES AND WITNESS TESTING, LEVEL 3 = RANDOM INSPECTION AND/OR AT COMPLETION OF WORK, LEVEL 4 = REVIEW OF PRECONSTRUCTION DOCUMENTATION, LEVEL 5 - REVIEW OF FINAL DOCUMENTS

CQC = CONTRACTOR QUALITY CONTROL SDQC = SPECIALIZED DISCIPLINE D = DISTRICT/PQACT ER = ENGINEER OF RECORD MCT = MANUFACTURER CERTIFICATION/TESTING

Approved By District/PQACT QA Manager: *DRoy Moseley* ***Date:*** *26July2018*

INSPECTION / TEST PLAN (ITP)
C-43 WEST BASIN STORAGE RESERVOIR
CONTRACT NUMBER: CN XXXXXXXXXX
CIVIL WORKS

Location: Hendry County, FL

Date Prepared:

Revision:

Contractor: **Prepared By:**

EXTERIOR LIGHTING
Spec. Section: 26 56 00

Item No.	Attribute / Activity Description	Acceptance Criteria (Codes, Std., Spec., Drawings, Etc.)	INSPECTION REQUIREMENTS			Forms / Records / References (3)	Comments
			Inspect	Hold (1)	Notify (2)		
1	PRE-CONSTRUCTION						
1.1	Contractor's Quality Control Plan, Site Health & Safety Plan and Permits	Quality Control 01 45 00, Safety Requirements 01 35 26, Permits & Fees 00 31 46	D-L4	D-L4		Plans and Permits	Plans have been submitted by Contractor and approved by the District/PQACT. All pemits have been obtained to begin work.
1.2	Preconstruction Submittals	Submittals 01 33 00 26 56 00	D-L4, ER-L4	D-L4, ER-L4		Transmittal 01 45 00.3.10.1. & Appen. C, Submittals 01 45 00.3.10.1. & Appen. C, Submittal Register	All preconstruction submittals for this DFOW shall be submitted by the Contractor and Approved by the District/PQACT.
1.3	Request For Information (RFIs)	Quality Control 01 45 00	D-L4, ER-L4	D-L4, ER-L4		Request for Information & Log 01 45 00.3.10.1 & Appen. C	All RFIs for this DFOW shall be answered in order to clear up any questions before work begins.
1.4	Work Plans	Quality Control 01 45 00	D-L4, ER-L4	D-L4, ER-L4		Plans	All work plans for this DFOW shall be submitted by the Contractor and approved by the District/PQACT.
1.5	Activity Hazard Analysis (AHA)	Safety Requirements 01 35 26	D-L4, ER-L4	D-L4, ER-L4		AHA 01 45 00.3.10.1 & Appen. C	The AHA for this DFOW have been submitted by the Contractor.
1.6	Previous Work Deficiencies & Non-Conformances of previous DFOW	Quality Control 01 45 00	CQC-L5, SDQC-L5, D-L5, ER-L5, MCT-L5	D-L4, ER-L4		Deficiency Logs and NCN Logs 01 45 00.3.10.1 & Appen. C	All deficiencies and non-conformances shall be corrected of previous work in order to avoid covering deficiencies.
1.7	Final Follow-up Control Phase Inspection of previous DFOW	Quality Control 01 45 00	CQC-L5, SDQC-L5, D-L5, ER-L5, MCT-L5	D-L4, ER-L4	48 Hours	Final Follow-up Control Phase Inspection Checklist & Punch-Out	Final Follow-up Control Phase Inspection checklist & punch out items shall be completed of previous work.
1.8	Preparatory Control Phase Inspection	Quality Control 01 45 00	CQC-L5, SDQC-L5, D-L5, ER-L5, MCT-L5	D-L4, ER-L4	48 Hours	Preparatory Control Phase Inspection Worksheet 01 45 00.3.10.1 & Appen. C	Preparatory Control Phase Inspection/Meeing shall be performed successfully without open issues.
2	CONSTRUCTION						
2.1	Initial Control Phase Inspection	01 45 00	CQC-L5, SDQC-L5, D-L5, ER-L5, MCT-L5	D-L5, ER-L5	provide agenda > 48 Hours prior to meeting	Initial Control Phase Inspection Agenda 01 45 00.1.10.1.13, Initial Control Phase Inspection Checklist	An Initial Control Phase Inspection shall be performed shortly after the DFOW has begun to determine if the DFOW plan is working and if the workmanship of the workers is satisfactory and meets safety standards.
2.2	INSTALLATION	26 56 00, 3.1	CQC-L1, SDQC-L1, D-L1, ER-L1, MCT-L5	D-L5, ER-L5		Initial Control Phase Inspection Agenda 01 45 00.1.10.1.13, Initial Control Phase Inspection Checklist	Electrical installations shall conform to IEEE C2, NFPA 70, and to the requirements specified herein.
2.3	Daily Follow-up Control Phase Inspections	01 45 00	CQC-L1			Daily Quality Control Report/ Daily Activity Log (DQCR) 01 45 00.3.10.1 & Appen. C	Contractor to perform daily Follow-up Control Phase Inspections and document findings on DQCR.

3	ACCEPTANCE						
3.1	Operational Testing	26 56 00, 3.2	CQC-L5, D-L5, ER-L5, SDQC-L5	D-L5, ER-L5		Daily Quality Control Report/ Daily Activity Log (DQCR) 01 45 00.3.10.1 & Appen. C	Testing shall be done in the presence of the District/PQACT and shall be performed after 100 hours of burn-in time. Testing to confirm the system operates in accordance with the requirements of the specifications.
3.2	Final Follow-up Control Phase Inspection	01 45 00	CQC-L5,D-L5, ER-L5	D-L5, ER-L5	provide agenda > 48 Hours prior to meeting	Final Follow-up Control Phase Inspection Checklist & Punch-Out	Final Follow-up Control Phase Inspection checklist & punch out items have been completed.

(1): A HOLD POINT is a mandatory requirement - advance notification and acceptance (verbal/written) is required prior to continuing work.
(2): A NOTIFY POINT requires advance notification prior to performing the activity.
(3): The DISTRICT/PQACT inspection form / checklist is to be completed by the Contractor and member of the District/PQACT prior to the start of work. The inspection form/ checklist shall show no incompletions.

LEVEL 1 = CONTINUOUS INSPECTION OF ACTIVITIES, LEVEL 2 = MONITOR CRITICAL ACTIVITIES AND WITNESS TESTING, LEVEL 3 = RANDOM INSPECTION AND/OR AT COMPLETION OF WORK, LEVEL 4 = REVIEW OF PRECONSTRUCTION DOCUMENTATION, LEVEL 5 - REVIEW OF FINAL DOCUMENTS

CQC = CONTRACTOR QUALITY CONTROL SDQC = SPECIALIZED DISCIPLINE D = DISTRICT/PQACT ER = ENGINEER OF RECORD MCT = MANUFACTURER CERTIFICATION/TESTING

Approved By District/PQACT QA Manager: *DRoy Moseley* ***Date:*** *26July2018*

INSPECTION / TEST PLAN (ITP)
C-43 WEST BASIN STORAGE RESERVOIR
CONTRACT NUMBER: CN XXXXXXXXXX
CIVIL WORKS

Location: Hendry County, FL

Date Prepared:

Revision:

Contractor: **Prepared By:**

LOW VOLTAGE MOTORS
Spec. Section: 26 60 13.00 40

Item No.	Attribute / Activity Description	Acceptance Criteria (Codes, Std., Spec., Drawings, Etc.)	INSPECTION REQUIREMENTS			Forms / Records / References (3)	Comments
			Inspect	Hold (1)	Notify (2)		
1	PRE-CONSTUCTION						
1.1	Contractor's Quality Control Plan, Site Health & Safety Plan and Permits	Quality Control 01 45 00, Safety Requirements 01 35 26, Permits & Fees 00 31 46	D-L4	D-L4		Plans and Permits	Plans have been submitted by Contractor and approved by the District/PQACT. All pemits have been obtained to begin work.
1.2	Preconstruction Submittals	Submittals 01 33 00 26 60 13.00 40	D-L4, ER-L4	D-L4, ER-L4		Transmittal 01 45 00.3.10.1. & Appen. C, Submittals 01 45 00.3.10.1. & Appen. C, Submittal Register	All preconstruction submittals for this DFOW shall be submitted by the Contractor and Approved by the District/PQACT.
1.3	Request For Information (RFIs)	Quality Control 01 45 00	D-L4, ER-L4	D-L4, ER-L4		Request for Information & Log 01 45 00.3.10.1 & Appen. C	All RFIs for this DFOW shall be answered in order to clear up any questions before work begins.
1.4	Work Plans	Quality Control 01 45 00	D-L4, ER-L4	D-L4, ER-L4		Plans	All work plans for this DFOW shall be submitted by the Contractor and approved by the District/PQACT.
1.5	Activity Hazard Analysis (AHA)	Safety Requirements 01 35 26	D-L4, ER-L4	D-L4, ER-L4		AHA 01 45 00.3.10.1 & Appen. C	The AHA for this DFOW have been submitted by the Contractor.
1.6	Previous Work Deficiencies & Non-Conformances of previous DFOW	Quality Control 01 45 00	CQC-L5, SDQC-L5, D-L5, ER-L5, MCT-L5	D-L4, ER-L4		Deficiency Logs and NCN Logs 01 45 00.3.10.1 & Appen. C	All deficiencies and non-conformances shall be corrected of previous work in order to avoid covering deficiencies.
1.7	Final Follow-up Control Phase Inspection of previous DFOW	Quality Control 01 45 00	CQC-L5, SDQC-L5, D-L5, ER-L5, MCT-L5	D-L4, ER-L4	48 Hours	Final Follow-up Control Phase Inspection Checklist & Punch-Out	Final Follow-up Control Phase Inspection checklist & punch out items shall be completed of previous work.
1.8	Preparatory Control Phase Inspection	Quality Control 01 45 00	CQC-L5, SDQC-L5, D-L5, ER-L5, MCT-L5	D-L4, ER-L4	48 Hours	Preparatory Control Phase Inspection Worksheet 01 45 00.3.10.1 & Appen. C	Preparatory Control Phase Inspection/Meeing shall be performed successfully without open issues.
2	CONSTRUCTION						
2.1	Initial Control Phase Inspection	01 45 00	CQC-L5, SDQC-L5, D-L5, ER-L5, MCT-L5	D-L5, ER-L5	provide agenda > 48 hours prior to meeting	Initial Control Phase Inspection Agenda 01 45 00.1.10.1.13, Initial Control Phase Inspection Checklist	An Initial Control Phase Inspection shall be performed shortly after the DFOW has begun to determine if the DFOW plan is working and if the workmanship of the workers is satisfactory and meets safety standards.
2.2	Perform continuity tests on all phases	26 60 13, 3.2.1	CQC-L2, D-L2, D-L2	D-L5, ER-L5			provide final test reports to the District
2.3	Perform Vibration Tests	27 60 13, 3.2.2	CQC-L2, D-L2, D-L2	D-L5, ER-L5			
2.4	Daily Follow-up Control Phase Inspections	01 45 00	CQC-L1			Daily Quality Control Report/ Daily Activity Log (DQCR) 01 45 00.3.10.1 & Appen. C	Contractor to perform daily Follow-up Control Phase Inspections and document findings on DQCR.

3	ACCEPTANCE						
3.1	Operation and Maintenance	26 60 13, 3.3.1	CQC-L5, SQDC-L5, D-L5, ER-54	D-L5, ER-L5			Submit O&M manual and warranty no later than 30 days before final acceptance
3.2	Warranty	26 60 13, 3.3.2					
3.3	Final Follow-up Control Phase Inspection	01 45 00	CQC-L5, D-L5, ER-L5	D-L5, ER-L5	provide agenda > 48 hours prior to meeting	Final Follow-up Control Phase Inspection Checklist & Punch-Out	Final Follow-up Control Phase Inspection checklist & punch out items have been completed.

(1): A HOLD POINT is a mandatory requirement - advance notification and acceptance (verbal/written) is required prior to continuing work.

(2): A NOTIFY POINT requires advance notification prior to performing the activity.

(3): The DISTRICT/PQACT inspection form / checklist is to be completed by the Contractor and member of the District/PQACT prior to the start of work. The inspection form/ checklist shall show no incompletions.

LEVEL 1 = CONTINUOUS INSPECTION OF ACTIVITIES, LEVEL 2 = MONITOR CRITICAL ACTIVITIES AND WITNESS TESTING, LEVEL 3 = RANDOM INSPECTION AND/OR AT COMPLETION OF WORK, LEVEL 4 = REVIEW OF PRECONSTRUCTION DOCUMENTATION, LEVEL 5 - REVIEW OF FINAL DOCUMENTS

CQC = CONTRACTOR QUALITY CONTROL SDQC = SPECIALIZED DISCIPLINE D = DISTRICT/PQACT ER = ENGINEER OF RECORD MCT = MANUFACTURER CERTIFICATION/TESTING

Approved By District/PQACT QA Manager: *D Roy Moseley* ***Date:*** *25July2018*

INSPECTION / TEST PLAN (ITP)
C-43 WEST BASIN STORAGE RESERVOIR
CONTRACT NUMBER: CN XXXXXXXXXX
CIVIL WORKS

Location: Hendry County, FL
Date Prepared:
Revision:
Contractor: **Prepared By:**

UNDERGROUND ELECTRICAL DISTRIBUTION
Spec. Section: 33 71 02

Item No.	Attribute / Activity Description	Acceptance Criteria (Codes, Std., Spec., Drawings, Etc.)	INSPECTION REQUIREMENTS			Forms / Records / References (3)	Comments
			Inspect	Hold (1)	Notify (2)		
1	PRE-CONSTUCTION						
1.1	Contractor's Quality Control Plan, Site Health & Safety Plan and Permits	Quality Control 01 45 00, Safety Requirements 01 35 26, Permits & Fees 00 31 46	D-L4	D-L4		Plans and Permits	Plans have been submitted by Contractor and approved by the District/PQACT. All pemits have been obtained to begin work.
1.2	Preconstruction Submittals	Submittals 01 33 00 33 71 02	D-L4, ER-L4	D-L4, ER-L4		Transmittal 01 45 00.3.10.1. & Appen. C, Submittals 01 45 00.3.10.1. & Appen. C, Submittal Register	All preconstruction submittals for this DFOW shall be submitted by the Contractor and Approved by the District/PQACT.
1.3	Request For Information (RFIs)	Quality Control 01 45 00	D-L4, ER-L4	D-L4, ER-L4		Request for Information & Log 01 45 00.3.10.1 & Appen. C	All RFIs for this DFOW shall be answered in order to clear up any questions before work begins.
1.4	Work Plans	Quality Control 01 45 00	D-L4, ER-L4	D-L4, ER-L4		Plans	All work plans for this DFOW shall be submitted by the Contractor and approved by the District/PQACT.
1.5	Activity Hazard Analysis (AHA)	Safety Requirements 01 35 26	D-L4, ER-L4	D-L4, ER-L4		AHA 01 45 00.3.10.1 & Appen. C	The AHA for this DFOW have been submitted by the Contractor.
1.6	Previous Work Deficiencies & Non-Conformances of previous DFOW	Quality Control 01 45 00	CQC-L5, SDQC-L5, D-L5, ER-L5, MCT-L5	D-L4, ER-L4		Deficiency Logs and NCN Logs 01 45 00.3.10.1 & Appen. C	All deficiencies and non-conformances shall be corrected of previous work in order to avoid covering deficiencies.
1.7	Final Follow-up Control Phase Inspection of previous DFOW	Quality Control 01 45 00	CQC-L5, SDQC-L5, D-L5, ER-L5, MCT-L5	D-L4, ER-L4	48 Hours	Final Follow-up Control Phase Inspection Checklist & Punch-Out	Final Follow-up Control Phase Inspection checklist & punch out items shall be completed of previous work.
1.8	Preparatory Control Phase Inspection	Quality Control 01 45 00	CQC-L5, SDQC-L5, D-L5, ER-L5, MCT-L5	D-L4, ER-L4	48 Hours	Preparatory Control Phase Inspection Worksheet 01 45 00.3.10.1 & Appen. C	Preparatory Control Phase Inspection/Meeing shall be performed successfully without open issues.
2	CONSTRUCTION						
2.1	Initial Control Phase Inspection	01 45 00	CQC-L5, SDQC-L5, D-L5, ER-L5, MCT-L5	D-L4, ER-L4	provide agenda > 48 Hours prior to meeting	Initial Control Phase Inspection Agenda 01 45 00.1.10.1.13, Initial Control Phase Inspection Checklist	An Initial Control Phase Inspection shall be performed shortly after the DFOW has begun to determine if the DFOW plan is working and if the workmanship of the workers is satisfactory and meets safety standards.
2.2	CABLE INSPECTION LOW VOLTAGE	33 71 02, 3.2	CQC-L2, SDQC-L2, D-L2, ER-L2	D-L2, ER-L2		Daily Quality Control Report/ Daily Activity Log (DQCR) 01 45 00.3.10.1 & Appen. C	Inspect each cable reel for correct storage positions, signs of physical damage, and broken end seals prior to installation.
2.3	Field Painting	33 71 02, 3.4.1	CQC-L2, SDQC-L2, D-L2, ER-L2	D-L2, ER-L2		Daily Quality Control Report/ Daily Activity Log (DQCR) 01 45 00.3.10.1 & Appen. C	Cast-iron frames and covers not buried in concrete or masonry must be leaned of mortar, rust, grease, dirt and other deleterious materials, and given a coat of bituminous paint.
2.4	UNDERGROUND CONDUIT AND DUCT SYSTEMS	33 71 02, 3.5	CQC-L2, SDQC-L2, D-L2, ER-L2	D-L2, ER-L2		Daily Quality Control Report/ Daily Activity Log (DQCR) 01 45 00.3.10.1 & Appen. C	Run conduit in straight lines except where a change of direction is necessary and in accordance with 33 71 02, 3.5
2.5	GROUNDING SYSTEMS	33 71 02, 3.6	CQC-L2, SDQC-L2, D-L2, ER-L2	D-L2, ER-L2		Daily Quality Control Report/ Daily Activity Log (DQCR) 01 45 00.3.10.1 & Appen. C	NFPA 70 and IEEE C2, except provide grounding systems with a resistance to solid earth ground not exceeding 25 ohms.

2.6	GROUNDING SYSTEMS	33 71 02, 3.6	CQC-L2, SDQC-L2, D-L2, ER-L2	D-L2, ER-L2		Daily Quality Control Report/ Daily Activity Log (DQCR) 01 45 00.3.10.1 & Appen. C	Install grounding in accordance with 33 71 02, 3.6. Should the resultant (combined) resistance exceed the specified resistance, measured not less than 48 hours after rainfall, notify the Construction Manager immediately.
2.7	EXCAVATING, BACKFILLING, AND COMPACTING	33 71 02, 3.7	CQC-L1, SDQC-L1, D-L1, ER-L1	D-L1, ER-L1		Daily Quality Control Report/ Daily Activity Log (DQCR) 01 45 00.3.10.1 & Appen. C	Provide in accordance with NFPA 70 and Section 31 00 00 EARTHWORK and in accordance with 33 71 02, 3.7
2.8	CAST-IN-PLACE CONCRETE	33 71 02, 3.8	CQC-L1, SDQC-L1, D-L1, ER-L1	D-L1, ER-L1		Daily Quality Control Report/ Daily Activity Log (DQCR) 01 45 00.3.10.1 & Appen. C	Provide concrete in accordance with Section 03 31 01.00 10 CAST-IN-PLACE STRUCTURAL CONCRETE FOR CIVIL WORKS and in accordance with 33 71 02, 3.8.
2.9	Field Acceptance Checks and Tests - Low Voltage Cables, 600-Volt	33 71 02, 3.9.1.1	CQC-L4, SQDC-L4, D-L4, ER-L4	D-L4, ER-L4		Daily Quality Control Report/ Daily Activity Log (DQCR) 01 45 00.3.10.1 & Appen. C	Visual and mechanical inspection & Electrical tests
2.10	Field Acceptance Checks and Tests - Grounding System	33 71 02, 3.9.1.2	CQC-L4, SQDC-L4, D-L4, ER-L4	D-L4, ER-L4		Daily Quality Control Report/ Daily Activity Log (DQCR) 01 45 00.3.10.1 & Appen. C	Visual and mechanical inspection & Electrical tests
2.11	Follow-Up Verification	33 71 02, 3.9.2	CQC-L4, SQDC-L4, D-L4, ER-L4	D-L4, ER-L4		Daily Quality Control Report/ Daily Activity Log (DQCR) 01 45 00.3.10.1 & Appen. C	Upon completion of acceptance checks and tests, show by demonstration in
3	**ACCEPTANCE**						
3.1	Provide as-built drawings and records of underground conduit and duct systems installation						
3.2	Final Follow-up Control Phase Inspection	01 45 00	CQC-L5, D-L5, ER-L5,	D-L5, ER-L5	provide agenda > 48 Hours prior to meeting	Final Follow-up Control Phase Inspection Checklist & Punch-Out	Final Follow-up Control Phase Inspection checklist & punch out items have been completed.

(1): A HOLD POINT is a mandatory requirement - advance notification and acceptance (verbal/written) is required prior to continuing work.

(2): A NOTIFY POINT requires advance notification prior to performing the activity.

(3): The DISTRICT/PQACT inspection form / checklist is to be completed by the Contractor and member of the District/PQACT prior to the start of work. The inspection form/ checklist shall show no incompletions.

LEVEL 1 = CONTINUOUS INSPECTION OF ACTIVITIES, LEVEL 2 = MONITOR CRITICAL ACTIVITIES AND WITNESS TESTING, LEVEL 3 = RANDOM INSPECTION AND/OR AT COMPLETION OF WORK, LEVEL 4 = REVIEW OF PRECONSTRUCTION DOCUMENTATION, LEVEL 5 - REVIEW OF FINAL DOCUMENTS

CQC = CONTRACTOR QUALITY CONTROL SDQC = SPECIALIZED DISCIPLINE D = DISTRICT/PQACT ER = ENGINEER OF RECORD MCT = MANUFACTURER CERTIFICATION/TESTING

Approved By District/PQACT QA Manager: *DRoy Moseley* ***Date:*** *26July2018*

INSPECTION / TEST PLAN (ITP)
C-43 WEST BASIN STORAGE RESERVOIR
CONTRACT NUMBER: CN XXXXXXXXXX
CIVIL WORKS

Location: Hendry County, FL

Date Prepared:

Revision:

Contractor: **Prepared By:**

PROCESS CONTROL SYSTEM
Spec. Section: 40 95 00

Item No.	Attribute / Activity Description	Acceptance Criteria (Codes, Std., Spec., Drawings, Etc.)	INSPECTION REQUIREMENTS			Forms / Records / References (3)	Comments
			Inspect	Hold (1)	Notify (2)		
1	PRE-CONSTUCTION						
1.1	Contractor's Quality Control Plan, Site Health & Safety Plan and Permits	Quality Control 01 45 00, Safety Requirements 01 35 26, Permits & Fees 00 31 46	D-L4	D-L4		Plans and Permits	Plans have been submitted by Contractor and approved by the District/PQACT. All pemits have been obtained to begin work.
1.2	Preconstruction Submittals	Submittals 01 33 00 40 95 00	D-L4, ER-L4	D-L4, ER-L4		Transmittal 01 45 00.3.10.1. & Appen. C, Submittals 01 45 00.3.10.1. & Appen. C, Submittal Register	All preconstruction submittals for this DFOW shall be submitted by the Contractor and Approved by the District/PQACT.
1.3	Request For Information (RFIs)	Quality Control 01 45 00	D-L4, ER-L4	D-L4, ER-L4		Request for Information & Log 01 45 00.3.10.1 & Appen. C	All RFIs for this DFOW shall be answered in order to clear up any questions before work begins.
1.4	Work Plans	Quality Control 01 45 00	D-L4, ER-L4	D-L4, ER-L4		Plans	All work plans for this DFOW shall be submitted by the Contractor and approved by the District/PQACT.
1.5	Activity Hazard Analysis (AHA)	Safety Requirements 01 35 26	D-L4, ER-L4	D-L4, ER-L4		AHA 01 45 00.3.10.1 & Appen. C	The AHA for this DFOW have been submitted by the Contractor.
1.6	Previous Work Deficiencies & Non-Conformances of previous DFOW	Quality Control 01 45 00	CQC-L5, SDQC-L5, D-L5, ER-L5, MCT-L5	D-L4, ER-L4		Deficiency Logs and NCN Logs 01 45 00.3.10.1 & Appen. C	All deficiencies and non-conformances shall be corrected of previous work in order to avoid covering deficiencies.
1.7	Final Follow-up Control Phase Inspection of previous DFOW	Quality Control 01 45 00	CQC-L5, SDQC-L5, D-L5, ER-L5, MCT-L5	D-L4, ER-L4	48 Hours	Final Follow-up Control Phase Inspection Checklist & Punch-Out	Final Follow-up Control Phase Inspection checklist & punch out items shall be completed of previous work.
1.8	Preparatory Control Phase Inspection	Quality Control 01 45 00	CQC-L5, SDQC-L5, D-L5, ER-L5, MCT-L5	D-L4, ER-L4	48 Hours	Preparatory Control Phase Inspection Worksheet 01 45 00.3.10.1 & Appen. C	Preparatory Control Phase Inspection/Meeing shall be performed successfully without open issues.
2	CONSTRUCTION						
2.1	Initial Control Phase Inspection	01 45 00	CQC-L5, SDQC-L5, D-L5, ER-L5, MCT-L5	D-L4, ER-L4	provide agenda > 48 Hours prior to meeting	Initial Control Phase Inspection Agenda 01 45 00.1.10.1.13, Initial Control Phase Inspection Checklist	An Initial Control Phase Inspection shall be performed shortly after the DFOW has begun to determine if the DFOW plan is working and if the workmanship of the workers is satisfactory and meets safety standards.
2.2	Daily Follow-up Control Phase Inspections	01 45 00	CQC-L1			Daily Quality Control Report/ Daily Activity Log (DQCR) 01 45 00.3.10.1 & Appen. C	Contractor to perform daily Follow-up Control Phase Inspections and document findings on DQCR.
2.3	Testing, Adjusting and Commissioning	40 95 00, 3.6.1	CQC-L5, SDQC-L5, D-L5, ER-L5, MCT-L5	D-L3, ER-L3		Daily Quality Control Report/ Daily Activity Log (DQCR) 01 45 00.3.10.1 & Appen. C	After the successful completion of the witnessed factory acceptance test as specified, the Contractor will be authorized to proceed with the installation of the PLC system equipment, hardware, and software.
2.4	Performance Verification Testing (PVT)	40 95 00, 3.4.2	CQC-L5, SDQC-L5, D-L5, ER-L5, MCT-L5	D-L3, ER-L3	Before Testing	Daily Quality Control Report/ Daily Activity Log (DQCR) 01 45 00.3.10.1 & Appen. C	Demonstrate that the completed Control system complies with the contract requirements.
2.5	Endurance testing	40 95 00, 3.4.3	CQC-L5, SDQC-L5, D-L5, ER-L5, MCT-L5	D-L3, ER-L3	Before Testing	Daily Quality Control Report/ Daily Activity Log (DQCR) 01 45 00.3.10.1 & Appen. C	Use the endurance test to demonstrate the overall system reliability of the completed system.
3	ACCEPTANCE						
3.1	Final Follow-up Control Phase Inspection	01 45 00	CQC-L5, D-L5, ER-L5	D-L5, ER-L5	provide agenda > 48 Hours prior to meeting	Final Follow-up Control Phase Inspection Checklist & Punch-Out	Final Follow-up Control Phase Inspection checklist & punch out items have been completed.
3.2	WARRANTY	40 95 00, 1.6	CQC-L5, D-L5, ER-L5	D-L5, ER-L5		Submittal	The warranty shall meet the requirements specified in Section 01 61 03 EQUIPMENT AND MATERIALS.

3.3	Preliminary Operator Training	40 95 00, 3.5.1	MCT-L3			Training	Prior to the start of field testing, preliminary operator training shall be taught at the project site for 3 consecutive training days.
3.4	Additional Operator Training	40 95 00, 3.5.2	Following the maintenance training, a minimum period of five total training			Training	Following the field testing, additional classroom training for operators shall be taught for 3 consecutive training days
3.5	Specialized Training	40 95 00, 3.5.3	day(s) shall be provided by a factory representative or a qualified			Training	Following the maintenance training, a minimum period of five total training day(s) shall be provided by a factory representative or a qualified Contractor trainer for ten people on the input devices.

(1): A HOLD POINT is a mandatory requirement - advance notification and acceptance (verbal/written) is required prior to continuing work.
(2): A NOTIFY POINT requires advance notification prior to performing the activity.
(3): The DISTRICT/PQACT inspection form / checklist is to be completed by the Contractor and member of the District/PQACT prior to the start of work. The inspection form/ checklist shall show no incompletions.

LEVEL 1 = CONTINUOUS INSPECTION OF ACTIVITIES, LEVEL 2 = MONITOR CRITICAL ACTIVITIES AND WITNESS TESTING, LEVEL 3 = RANDOM INSPECTION AND/OR AT COMPLETION OF WORK, LEVEL 4 = REVIEW OF PRECONSTRUCTION DOCUMENTATION, LEVEL 5 - REVIEW OF FINAL DOCUMENTS

CQC = CONTRACTOR QUALITY CONTROL SDQC = SPECIALIZED DISCIPLINE D = DISTRICT/PQACT ER = ENGINEER OF RECORD MCT = MANUFACTURER CERTIFICATION/TESTING

Approved By District/PQACT QA Manager: *D Roy Moseley* ***Date:*** *26July2018*

INSPECTION / TEST PLAN (ITP)
C-43 WEST BASIN STORAGE RESERVOIR
CONTRACT NUMBER: CN XXXXXXXXXX

CIVIL WORKS

Location: Hendry County, FL

Date Prepared:

Revision:

Contractor: **Prepared By:**

PROTECIVE COATING
Spec. Section: 09 06 90

Item No.	Attribute / Activity Description	Acceptance Criteria (Codes, Std., Spec., Drawings, Etc.)	INSPECTION REQUIREMENTS			Forms / Records / References (3)	Comments
			Inspect	Hold (1)	Notify (2)		
1	PRE-CONSTRUCTION						
1.1	Contractor's Quality Control Plan, Site Health & Safety Plan and Permits	Quality Control 01 45 00, Safety Requirements 01 35 26, Permits & Fees 00 31 46	D-L4	D-L4		Plans and Permits	Plans have been submitted by Contractor and approved by the District/PQACT. All pemits have been obtained to begin work.
1.2	Preconstruction Submittals	Submittals 01 33 00 09 06 90	D-L4, ER-L4	D-L4, ER-L4		Transmittal 01 45 00.3.10.1. & Appen. C, Submittals 01 45 00.3.10.1. & Appen. C, Submittal Register	All preconstruction submittals for this DFOW shall be submitted by the Contractor and Approved by the District/PQACT.
1.3	Request For Information (RFIs)	Quality Control 01 45 00	D-L4, ER-L4	D-L4, ER-L4		Request for Information & Log 01 45 00.3.10.1 & Appen. C	All RFIs for this DFOW shall be answered in order to clear up any questions before work begins.
1.4	Work Plans	Quality Control 01 45 00	D-L4, ER-L4	D-L4, ER-L4		Plans	All work plans for this DFOW shall be submitted by the Contractor and approved by the District/PQACT.
1.5	Activity Hazard Analysis (AHA)	Safety Requirements 01 35 26	D-L4, ER-L4	D-L4, ER-L4		AHA 01 45 00.3.10.1 & Appen. C	The AHA for this DFOW have been submitted by the Contractor.
1.6	Previous Work Deficiencies & Non-Conformances of previous DFOW	Quality Control 01 45 00	CQC-L5, SDQC-L5, D-L5, ER-L5, MCT-L5	D-L4, ER-L4		Deficiency Logs and NCN Logs 01 45 00.3.10.1 & Appen. C	All deficiencies and non-conformances shall be corrected of previous work in order to avoid covering deficiencies.
1.7	Final Follow-up Control Phase Inspection of previous DFOW	Quality Control 01 45 00	CQC-L5, SDQC-L5, D-L5, ER-L5, MCT-L5	D-L4, ER-L4	48 Hours	Final Follow-up Control Phase Inspection Checklist & Punch-Out	Final Follow-up Control Phase Inspection checklist & punch out items shall be completed of previous work.
1.8	Preparatory Control Phase Inspection	Quality Control 01 45 00	CQC-L5, SDQC-L5, D-L5, ER-L5, MCT-L5	D-L4, ER-L4	48 Hours	Preparatory Control Phase Inspection Worksheet 01 45 00.3.10.1 & Appen. C	Preparatory Control Phase Inspection/Meeing shall be performed successfully without open issues.
1.9	Pre-painting Conference	09 06 90, 1.7	D-L4, ER-L4	D-L4, ER-L4		Transmittal 01 45 00.3.10.1. & Appen. C, Submittals 01 45 00.3.10.1. & Appen. C, D Submittal Register	Before field painting starts, representatives for the District, Contractor, coating applicator, and coating Manufacturer's technical representative shall meet with the District's personnel.
2	CONSTRUCTION						
2.1	Initial Control Phase Inspection	01 45 00, 3.7.2	CQC-L5, SDQC-L5, D-L5, ER-L5,	D-L5, ER-L5	provide agenda > 48 hours prior to meeting	Initial Control Phase Inspection Checklist 01 45 00.3.10.1, & Specifications Appendix C	An Initial Control Phase Inspection shall be performed shortly after the DFOW has begun to determine if the DFOW plan is working and if the workmanship of the workers is satisfactory and meets safety standards.
2.2	Daily Follow-up Control Phase Inspections	01 45 00, 3.7.3	CQC-L1	N/A	N/A	Daily Quality Control Report/ Daily Activity Log (DQCR) 01 45 00.3.10.1 & Specifications Appendix C	Contractor to perform daily Follow-up Control Phase Inspections and document findings on DQCR.
2.3	APPLICATION	09 06 90, 3.4	CQC-2, SDQC-2, D-2, ER-2	D-L2, ER-L2	In advance	Daily Quality Control Report/ Daily Activity Log (DQCR) 01 45 00.3.10.1 & Specifications Appendix C	Cleaned surfaces and all coats shall be inspected prior to each succeeding coat. The Contractor shall schedule such inspection with the District in advance.
2.4	INSPECTION	09 06 90, 3.5	CQC-1, SDQC-1, D-1, ER-1	D-L1, ER-L1		Daily Quality Control Report/ Daily Activity Log (DQCR) 01 45 00.3.10.1 & Specifications Appendix C	Contractor shall provide and use a wet-film gauge to check each application approximately every fifteen (15) minutes in order to immediately correct film thickness under or over that specified.
3	ACCEPTANCE						
3.1	Deficiencies & Non-Conformances of this DFOW	01 45 00	CQC-5, SDQC-5, D-5, ER-5	D-L5, ER-L4		Deficiency Logs and NCN Logs 01 45 00.3.10.1 & Appendix C	All deficiencies and non-conformances have been corrected of work in order to avoid covering deficiencies.

3.2	Final Follow-up Control Phase Inspection	01 45 00, 3.9.3	CQC-L5, D-L5, ER-L5,	D-L5, ER-L5	provide agenda > 48 hours prior to meeting	Final Follow-up Control Phase Inspection Checklist & Punch-Out 01 45 00.3.10.1 & Specifications Appendix C	Final Follow-up Control Phase Inspection checklist & punch out items have been completed.
3.3	WARRANTY	09 06 90, 1.8	D-L4, ER-L4	D-L4, ER-L4		Transmittal 01 45 00.3.10.1. & Appen. C, Submittals 01 45 00.3.10.1. & Appen. C, D Submittal Register	The warranty shall meet the requirements specified in Section 01 61 03 EQUIPMENT AND MATERIALS.

(1): A HOLD POINT is a mandatory requirement - advance notification and acceptance (verbal/written) is required prior to continuing work.

(2): A NOTIFY POINT requires advance notification prior to performing the activity.

(3): The DISTRICT/PQACT inspection form / checklist is to be completed by the Contractor and member of the District/PQACT prior to the start of work. The inspection form/ checklist shall show no incompletions.

LEVEL 1 = CONTINUOUS INSPECTION OF ACTIVITIES, LEVEL 2 = MONITOR CRITICAL ACTIVITIES AND WITNESS TESTING, LEVEL 3 = RANDOM INSPECTION AND/OR AT COMPLETION OF WORK, LEVEL 4 = REVIEW OF PRECONSTRUCTION DOCUMENTATION, LEVEL 5 - REVIEW OF FINAL DOCUMENTS

CQC = CONTRACTOR QUALITY CONTROL SDQC = SPECIALIZED DISCIPLINE D = DISTRICT/PQACT ER = ENGINEER OF RECORD MCT = MANUFACTURER CERTIFICATION/TESTING

Approved By District/PQACT QA Manager: ***Date:***

– This page intentionally left blank –

Appendix C

FORMS, LOGS AND REPORTS TABLE

FORMS	FREQUENCY	COMPLETED BY	E-MAIL DISTRIBUTION	E-MAIL QAM	EBUILDERS	QMS SYSTEM	INSP. MEETING	PROGRESS MEETING
C01 - CONTRACTOR QUALITY CONTROL REPORT	DAILY	CQCSM IN EBUILDERS	NO	YES	YES	NO	NONE	NO, UNLESS REQUESTED
C02 - DAILY SITE SAFETY REPORT	DAILY	CQCSM/SSHO	NO	YES & QA SSHO	YES	NO	NONE	NO, UNLESS REQUESTED
C03 - SUBMITTAL REGISTER	THU-OUT PROJECT	CQCSM IN EBUILDERS	NO	NO	YES	NO	PREP W/ SUBMITTAL	YES
C04 - TRANSMITTAL FORM	WITH SUBMITTALS	CQCSM IN EBUILDERS	NO	NO	YES	NO	PREP, INITIAL, FOLLOW UP	NO, UNLESS REQUESTED
C05 - REQUEST FOR INFORMATION FORM	WITH RFI	CQCSM IN EBUILDERS	NO	NO	YES	NO	PREP, INITIAL, FOLLOW UP	YES
C07 - ITP FORMS	PRESENT AT 3 PHASE INSPECTION MEETINGS	CQC INSPECTOR AND QA INSPECTOR	NO	NO	NO	YES	PREP, INITIAL, FOLLOW UP	NO, UNLESS REQUESTED
C09 - PREPARATORY CONTROL PHASE INSPECTION CHECKLIST/MEETING MINUTES	CHECKLIST BEFORE MEETING - MINUTES AFTER MEETING	CQCSM	YES - AS SPECIFIED BY QAM	YES	YES	NO	CHECKLIST - PREP MINUTES - INITIAL	NO, UNLESS REQUESTED
C10 - INITIAL CONTROL PHASE INSPECTION CHECKLIST/MEETING MINUTES	CHECKLIST BEFORE MEETING - MINUTES AFTER MEETING	CQCSM	YES - AS SPECIFIED BY QAM	YES	YES	NO	CHECKLIST - INITIAL MINUTES - FOLLOW UP	NO, UNLESS REQUESTED
C11 - FINAL FOLLOW-UP CONTROL PHASE INSPECTION CHECKLIST/MEETING MINUTES	CHECKLIST BEFORE MEETING - MINUTES AFTER MEETING	CQCSM	YES - AS SPECIFIED BY QAM	YES	YES	NO	CHECKLIST - FOLLOW UP	NO, UNLESS REQUESTED
C12 - PUNCHOUT INSPECTION	DURING INSPECTIONS	CQCSM	YES - AS SPECIFIED BY QAM	YES	YES	NO	FINAL FOLLOW UP	NO, UNLESS REQUESTED
C13 - PRE-FINAL PUNCH-OUT INSPECTION	DURING INSPECTIONS	CQCSM	YES - AS SPECIFIED BY QAM	YES	YES	NO	NONE	NO, UNLESS REQUESTED
C14 - THREE PHASE INSPECTION SCHEDULE	PRESENT AT PROGRESS MEETINGS	CQCSM	YES - AS SPECIFIED BY QAM	YES	YES	NO	NONE	YES
C15 - THREE WEEK LOOK AHEAD SCHEDULE	PRESENT AT PROGRESS MEETINGS	CQCSM	YES - AS SPECIFIED BY QAM	YES	YES	NO	NONE	YES
C16 - CONTRACTOR DEFICIENCY/REWORK ITEMS LOG	RECORD EACH DEFICIENCY UPDATE	CQCSM	YES - AS SPECIFIED BY QAM	YES	YES	NO	PREP, INITIAL, FOLLOW UP	YES
C17 - WILDLIFE TRAINING LOG	UPDATE WITH EACH SITE EMPLOYEE ARRIVAL	CQCSM/SSHO	YES - AS SPECIFIED BY QAM	NO	YES	NO	NONE	NO, UNLESS REQUESTED
C18 - WILDLIFE SIGHTING REPORT	UPDATE WITH EACH SIGHTING	CQCSM	YES - AS SPECIFIED BY QAM	NO	YES	NO	NONE	NO, UNLESS REQUESTED
C19 - ACTUAL MONTHLY WEATHER CONDITIONS REPORT	DAILY-SEND MONTHLY	CQCSM	NO	YES	YES	NO	NONE	NO, UNLESS REQUESTED
C20 - BMP INSPECTION LOG	WEEKLY & DURING RAIN EVENT PER SPECS	CQCSM	NO	YES	NO	YES	NONE	NO, UNLESS REQUESTED
C21 - SURVEYOR DAILY LOG	DAILY DURING SURVEYING ACTIVITY	SURVEYOR	NO	NO	YES	NO	INITIAL, FOLLOW UP	NO, UNLESS REQUESTED
C22 - DEWATERING REPORT FORM-MONITORING WELLS	DAILY DURING MONITORING ACTIVITY	CQCSM	YES - AS SPECIFIED BY QAM	NO	YES	NO	NONE	NO, UNLESS REQUESTED
C23 - TURBIDITY MONITORING REPORT FORM	DAILY	CQCSM	YES - AS SPECIFIED BY QAM	YES	YES	NO	NONE	NO, UNLESS REQUESTED
C24 - SETTLEMENT MONITORING LOGS	DAILY DURING MONITORING ACTIVITY	CQCSM	YES - AS SPECIFIED BY QAM	NO	YES	YES	NONE	NO, UNLESS REQUESTED
C25 - SHEETPILE DRIVING RECORDS	DAILY DURING INSTALL ACTIVITY	CQCSM	NO	YES	YES	YES	NONE	NO, UNLESS REQUESTED
C26 - DAILY SHEETPILE DEFLECTION REPORT	DAILY AFTER INSTALL AND BEFORE REMOVAL	CQCSM	NO	YES	YES	YES	NONE	NO, UNLESS REQUESTED
C28 - BACKFILL/COMPACTION CHECKLIST	DURING BACKFILL AND COMPACTION ACTIVITY	CQC INSPECTOR AND QA INSPECTOR	NO	YES	NO	YES	NONE	NO, UNLESS REQUESTED
C30 - CONCRETE PREPLACEMENT CHECKLIST	BEFORE CONCRETE PLACEMENT	CQC INSPECTOR AND QA INSPECTOR	NO	YES	NO	YES	NONE	NO, UNLESS REQUESTED
C34 - PRE-INSTALL MASONRY INSPECTION CHECKLIST	BEFORE PLACEMENT	CQC INSPECTOR AND QA INSPECTOR	NO	YES	NO	YES	NONE	NO, UNLESS REQUESTED
C35 - CERTIFICATE OF HYDROSTATIC/PNEUMATIC TEST REPORT	DURING TESTING	CQCSM	NO	NO	NO	YES	NONE	NO, UNLESS REQUESTED

C36 - DRAINAGE PIPE WATERLINE/DISCHARGE PIPE INSPECTION CHECKLIST	DAILY DURING INSTALL ACTIVITY	CQC INSPECTOR AND QA INSPECTOR	NO	NO	NO	YES	NONE	NO, UNLESS REQUESTED
C37 - STEEL DOORS, WINDOWS & FRAMES CHECKLIST	DAILY DURING INSTALL ACTIVITY	CQC INSPECTOR AND QA INSPECTOR	NO	NO	NO	YES	NONE	NO, UNLESS REQUESTED
C38 - PRE-ENGINEERED COMPONENTS INSPECTION CHECKLIST	DAILY DURING INSTALL ACTIVITY	CQC INSPECTOR AND QA INSPECTOR	NO	NO	NO	YES	NONE	NO, UNLESS REQUESTED
C39 - STRUCTURAL STEEL INSPECTION CHECKLIST	DAILY DURING INSTALL ACTIVITY	CQC INSPECTOR AND QA INSPECTOR	NO	NO	NO	YES	NONE	NO, UNLESS REQUESTED
C40 - WELDING INSPECTION CHECKLIST	DAILY DURING WELDING ACTIVITY	CQC INSPECTOR AND QA INSPECTOR	NO	NO	NO	YES	NONE	NO, UNLESS REQUESTED
C41 - THERMISTOR READING LOG	DAILY DURING MONITORING ACTIVITY	CQCSM	YES - AS SPECIFIED BY QAM	NO	NO	YES	NONE	NO, UNLESS REQUESTED
C42 - ELECTRICAL INSPECTION CHECKLIST	DAILY DURING INSTALL ACTIVITY	CQC INSPECTOR AND QA INSPECTOR	NO	NO	NO	YES	NONE	NO, UNLESS REQUESTED

DFOW - CHECKLISTS	FREQUENCY	COMPLETED BY	E-MAIL DISTRIBUTION	E-MAIL QAM	EBUILDERS	QMS SYSTEM	INSP. MEETING	PROGRESS MEETING
		CIVIL						
DEMOLITION	THRU-OUT DFOW	CQC INSPECTOR AND QA INSPECTOR	NO	YES	NO	YES	YES	NO, UNLESS REQUESTED
ENVIRONMENTAL PROTECTION	THRU-OUT DFOW	CQC INSPECTOR AND QA INSPECTOR	NO	YES	NO	YES	YES	NO, UNLESS REQUESTED
EROSION AND SEDIMENT CONTROL	THRU-OUT DFOW	CQC INSPECTOR AND QA INSPECTOR	NO	YES	NO	YES	YES	NO, UNLESS REQUESTED
DISTRICT CONSTRUCTION COMPOUND	THRU-OUT DFOW	CQC INSPECTOR AND QA INSPECTOR	NO	YES	NO	YES	YES	NO, UNLESS REQUESTED
LAYOUT	THRU-OUT DFOW	CQC INSPECTOR AND QA INSPECTOR	NO	YES	NO	YES	YES	NO, UNLESS REQUESTED
CLEARING AND GRUBBING	THRU-OUT DFOW	CQC INSPECTOR AND QA INSPECTOR	NO	YES	NO	YES	YES	NO, UNLESS REQUESTED
DITCH AND CANAL FILLING	THRU-OUT DFOW	CQC INSPECTOR AND QA INSPECTOR	NO	YES	NO	YES	YES	NO, UNLESS REQUESTED
PAVING	THRU-OUT DFOW	CQC INSPECTOR AND QA INSPECTOR	NO	YES	NO	YES	YES	NO, UNLESS REQUESTED
ACCESS ROAD IMPROVEMENT	THRU-OUT DFOW	CQC INSPECTOR AND QA INSPECTOR	NO	YES	NO	YES	YES	NO, UNLESS REQUESTED
FENCING	THRU-OUT DFOW	CQC INSPECTOR AND QA INSPECTOR	NO	YES	NO	YES	YES	NO, UNLESS REQUESTED
BOAT RAMPS	THRU-OUT DFOW	CQC INSPECTOR AND QA INSPECTOR	NO	YES	NO	YES	YES	NO, UNLESS REQUESTED
SITE UTILITIES	THRU-OUT DFOW	CQC INSPECTOR AND QA INSPECTOR	NO	YES	NO	YES	YES	NO, UNLESS REQUESTED
RIPRAP	THRU-OUT DFOW	CQC INSPECTOR AND QA INSPECTOR	NO	YES	NO	YES	YES	NO, UNLESS REQUESTED
REVETMENT	THRU-OUT DFOW	CQC INSPECTOR AND QA INSPECTOR	NO	YES	NO	YES	YES	NO, UNLESS REQUESTED
WAVE WALL	THRU-OUT DFOW	CQC INSPECTOR AND QA INSPECTOR	NO	YES	NO	YES	YES	NO, UNLESS REQUESTED
RECREATION FEATURES	THRU-OUT DFOW	CQC INSPECTOR AND QA INSPECTOR	NO	YES	NO	YES	YES	NO, UNLESS REQUESTED
		GEOTECHNICAL						
DAM FOUNDATION PREPARATION	THRU-OUT DFOW	CQC INSPECTOR AND QA INSPECTOR	NO	YES	NO	YES	YES	NO, UNLESS REQUESTED
TEMPORARY GEOTECHNICAL INSTRUMENTATION	THRU-OUT DFOW	CQC INSPECTOR AND QA INSPECTOR	NO	YES	NO	YES	YES	NO, UNLESS REQUESTED
EARTHWORK - DAM EMBANKMENT FILL, SELLECT FILL, BENTONITE AMENDED SOIL AND GAP CLOSURES	THRU-OUT DFOW	CQC INSPECTOR AND QA INSPECTOR	NO	YES	NO	YES	YES	NO, UNLESS REQUESTED
DEWATERING	THRU-OUT DFOW	CQC INSPECTOR AND QA INSPECTOR	NO	YES	NO	YES	YES	NO, UNLESS REQUESTED
COFFERDAMS	THRU-OUT DFOW	CQC INSPECTOR AND QA INSPECTOR	NO	YES	NO	YES	YES	NO, UNLESS REQUESTED
PRESSURE RELIEF SYSTEM	THRU-OUT DFOW	CQC INSPECTOR AND QA INSPECTOR	NO	YES	NO	YES	YES	NO, UNLESS REQUESTED
SOIL BENTONITE WALL	THRU-OUT DFOW	CQC INSPECTOR AND QA INSPECTOR	NO	YES	NO	YES	YES	NO, UNLESS REQUESTED

SOIL CEMENT SLOPE PROTECTION	THRU-OUT DFOW	CQC INSPECTOR AND QA INSPECTOR	NO	YES	NO	YES	YES	NO, UNLESS REQUESTED
BLANKET DRAIN, CHIMNEY DRAIN, TOE DRAIN AND SLOPE PROTECTION UNDERDRAIN	THRU-OUT DFOW	CQC INSPECTOR AND QA INSPECTOR	NO	YES	NO	YES	YES	NO, UNLESS REQUESTED
PERMANENT GEOTECHNICAL INSTRUMENTATION	THRU-OUT DFOW	CQC INSPECTOR AND QA INSPECTOR	NO	YES	NO	YES	YES	NO, UNLESS REQUESTED
GRASSING	THRU-OUT DFOW	CQC INSPECTOR AND QA INSPECTOR	NO	YES	NO	YES	YES	NO, UNLESS REQUESTED
MONITORING WELLS	THRU-OUT DFOW	CQC INSPECTOR AND QA INSPECTOR	NO	YES	NO	YES	YES	NO, UNLESS REQUESTED
COFFERDAM TIE BACK SYSTEM	THRU-OUT DFOW	CQC INSPECTOR AND QA INSPECTOR	NO	YES	NO	YES	YES	NO, UNLESS REQUESTED
STRUCTURAL								
LOCAL ACCESS BRIDGE	THRU-OUT DFOW	CQC INSPECTOR AND QA INSPECTOR	NO	YES	NO	YES	YES	NO, UNLESS REQUESTED
SITE ACCESS BRIDGE	THRU-OUT DFOW	CQC INSPECTOR AND QA INSPECTOR	NO	YES	NO	YES	YES	NO, UNLESS REQUESTED
ROOF SYSTEM INSTALLATION AND MISCELLANEOUS ROOF ACCESSORIES	THRU-OUT DFOW	CQC INSPECTOR AND QA INSPECTOR	NO	YES	NO	YES	YES	NO, UNLESS REQUESTED
SLABS ON GRADE	THRU-OUT DFOW	CQC INSPECTOR AND QA INSPECTOR	NO	YES	NO	YES	YES	NO, UNLESS REQUESTED
WALLS AND COLUMNS	THRU-OUT DFOW	CQC INSPECTOR AND QA INSPECTOR	NO	YES	NO	YES	YES	NO, UNLESS REQUESTED
INSTALLATION OF SHEETPILE WINGWALLS	THRU-OUT DFOW	CQC INSPECTOR AND QA INSPECTOR	NO	YES	NO	YES	YES	NO, UNLESS REQUESTED
SHEET PILING - VINYL	THRU-OUT DFOW	CQC INSPECTOR AND QA INSPECTOR	NO	YES	NO	YES	YES	NO, UNLESS REQUESTED
PRECAST CONCRETE PILING	THRU-OUT DFOW	CQC INSPECTOR AND QA INSPECTOR	NO	YES	NO	YES	YES	NO, UNLESS REQUESTED
MECHANICAL								
HVAC EQUIPMENT SYSYEM INSTALLATION	THRU-OUT DFOW	CQC INSPECTOR AND QA INSPECTOR	NO	YES	NO	YES	YES	NO, UNLESS REQUESTED
VERTICAL LIFT GATES	THRU-OUT DFOW	CQC INSPECTOR AND QA INSPECTOR	NO	YES	NO	YES	YES	NO, UNLESS REQUESTED
DISCHARGE PIPING	THRU-OUT DFOW	CQC INSPECTOR AND QA INSPECTOR	NO	YES	NO	YES	YES	NO, UNLESS REQUESTED
VERTICAL AXIAL FLOW PUMPS	THRU-OUT DFOW	CQC INSPECTOR AND QA INSPECTOR	NO	YES	NO	YES	YES	NO, UNLESS REQUESTED
ELECTRICAL								
LPG FUEL TANK MONITORING	THRU-OUT DFOW	CQC INSPECTOR AND QA INSPECTOR	NO	YES	NO	YES	YES	NO, UNLESS REQUESTED
INSULATED WIRE AND CABLE	THRU-OUT DFOW	CQC INSPECTOR AND QA INSPECTOR	NO	YES	NO	YES	YES	NO, UNLESS REQUESTED
LOW VOLTAGE OVERCURRENT DEVICE	THRU-OUT DFOW	CQC INSPECTOR AND QA INSPECTOR	NO	YES	NO	YES	YES	NO, UNLESS REQUESTED
DISTRIBUTION SYSTEM	THRU-OUT DFOW	CQC INSPECTOR AND QA INSPECTOR	NO	YES	NO	YES	YES	NO, UNLESS REQUESTED
ARC FLASH STUDY	THRU-OUT DFOW	CQC INSPECTOR AND QA INSPECTOR	NO	YES	NO	YES	YES	NO, UNLESS REQUESTED
AUTOMATIC TRANSFER SWITCHES	THRU-OUT DFOW	CQC INSPECTOR AND QA INSPECTOR	NO	YES	NO	YES	YES	NO, UNLESS REQUESTED
STANDBY GENERATOR AND LPG SYSTEM INSTALLATION	THRU-OUT DFOW	CQC INSPECTOR AND QA INSPECTOR	NO	YES	NO	YES	YES	NO, UNLESS REQUESTED
LIGHTNING PROTECTION	THRU-OUT DFOW	CQC INSPECTOR AND QA INSPECTOR	NO	YES	NO	YES	YES	NO, UNLESS REQUESTED
CATHODIC PROTECTION	THRU-OUT DFOW	CQC INSPECTOR AND QA INSPECTOR	NO	YES	NO	YES	YES	NO, UNLESS REQUESTED
INTERIOR LIGHTING	THRU-OUT DFOW	CQC INSPECTOR AND QA INSPECTOR	NO	YES	NO	YES	YES	NO, UNLESS REQUESTED
EXTERIOR LIGHTING	THRU-OUT DFOW	CQC INSPECTOR AND QA INSPECTOR	NO	YES	NO	YES	YES	NO, UNLESS REQUESTED
LOW VOLTAGE MOTORS	THRU-OUT DFOW	CQC INSPECTOR AND QA INSPECTOR	NO	YES	NO	YES	YES	NO, UNLESS REQUESTED

UNDERGROUND ELECTRIC DISTRIBUTION	**THRU-OUT DFOW**	**CQC INSPECTOR AND QA INSPECTOR**	**NO**	**YES**	**NO**	**YES**	**YES**	**NO, UNLESS REQUESTED**
PROCESS CONTROL SYSTEM	**THRU-OUT DFOW**	**CQC INSPECTOR AND QA INSPECTOR**	**NO**	**YES**	**NO**	**YES**	**YES**	**NO, UNLESS REQUESTED**
PAINT AND COATING								
PROTECTIVE COATING	**THRU-OUT DFOW**	**CQC INSPECTOR AND QA INSPECTOR**	**NO**	**YES**	**NO**	**YES**	**YES**	**NO, UNLESS REQUESTED**
INSTRUMENTATION AND CONTROLS								
VERTICAL PROFILING SYSTEM	**THRU-OUT DFOW**	**CQC INSPECTOR AND QA INSPECTOR**	**NO**	**YES**	**NO**	**YES**	**YES**	**NO, UNLESS REQUESTED**
RADIO TRANSMISSION SYSTEM	**THRU-OUT DFOW**	**CQC INSPECTOR AND QA INSPECTOR**	**NO**	**YES**	**NO**	**YES**	**YES**	**NO, UNLESS REQUESTED**

DAILY SAFETY & INSPECTION LOG

PROJECT NAME: C-43 WEST BASIN STORAGE RESERVOIR
CONTRACT NUMBER: CN XXXXXXXXXX
P4: CIVIL WORKS

CONTRACTOR:			**DATE:**
WEATHER:			**HIGH TEMP.:**
PRECIPITATION:	**WIND:**	**mph**	**LOW TEMP.:**

WAS A JOB SAFETY MEETING HELD TODAY? (Attach meeting documents with attendees' signatures to this report.)	**YES**		**NO**	
WERE THERE ANY ACCIDENTS TODAY? (If YES, attach copy of complete OSHA report to this report.)	**YES**		**NO**	
WAS CRANE/MANLIFT/TRENCHING/SCAFFOLD/HVAC/ELECTRICAL/HIGH/HAZMAT WORK PERFORMED? (If YES, attach checklist of performed inspection(s) to this report.)	**YES**		**NO**	
WAS HAZARDOUS MATERIAL/WASTE RELEASE INTO THE ENVIRONMENT? (If YES, attach description and applicable report of the incident with proposed corrective action to this report.)	**YES**		**N0**	

SUMMARY OF DAY'S ACTIVITIES: (List a brief summary of activities/areas performed during the day. Include Tailgate Meetings and/or any other Safety Meetings.)

VIOLATIONS/HAZARDS OF THE SITE SAFETY/HEALTH PLAN & AHA: (Describe in detail all violations and/or hazards observed, causes of the violations and/or hazards, the corrective actions to be taken to prevent future occurrences and the estimated and actual dates for the corrections to be taken.)

PROTECTIVE CLOTHING & SAFETY EQUIPMENT BEING USED FOR TASKS: (Briefly describe the PPE clothing and safety equipment being used for each task listed in the, above, "Summary of Day's Activities" section.)

DAILY SAFETY & INSPECTION LOG

PROJECT NAME: C-43 WEST BASIN STORAGE RESERVOIR
CONTRACT NUMBER: CN XXXXXXXXXX
P4: CIVIL WORKS

PHYSICAL CONDITION OBSERVATION OF WORKERS: (Describe any heat stress, cold stress or other medical concerns that are being monitored, as well as how the monitoring is taking place. Describe any issues with the workers and their physical conditions. Describe any preventive actions taking place to assist concerns, such as extra breaks…etc.)

ACCIDENTS OR BREACH OF PROCEDURES:

DESCRIPTION OF MONITORING & AIR SAMPLING TAKEN:

MISCELLANEOUS:

SSHO NAME:	SSHO SIGNATURE:

PREPARATORY CONTROL PHASE INSPECTION MEETING CHECKLIST

PROJECT NAME: C-43 WEST BASIN STORAGE RESERVOIR
CONTRACT NUMBER: CN XXXXXXXXX
PACKAGE 4 - CIVIL WORKS

DEFINEABLE FEATURE OF WORK:	**DATE:**
PRIME CONTRACTOR:	
PROJECT SPECIFICATIONS:	
PROJECT DRAWING Nos.:	

ATTENDEES OF INSPECTION

NAME	POSITION	COMPANY

SUBMITTALS AND MATERIALS		
A. REVIEW SUBMITTAL REGISTER. HAVE ALL PREREQUISITE SUBMITTALS BEEN APPROVED?	YES NO	
(LIST SUBMITTALS AND INCLUDE ANY COMMENTS)		
B. HAVE DELIVERED MATERIALS BEEN VERIFIED AGAINST APPROVED SUBMITTALS?	YES NO	
NOTE ANY VARIANCES:		
C. ARE ALL MATERIALS STORED PROPERLY?	YES NO	
COMMENT:		

PRELIMINARY WORK		
A. ENSURE ALL PRELIMINARY WORK IS COMPLETE AND CORRECT.		
COMMENT:		
B. ARE ALL REQUIRED SURVEYS COMPLETE AND DOCUMENTED?	YES NO	
COMMENT:		

WORK PLAN, SPECIFICATIONS AND RFIs
A. REVIEW SPECIFICATIONS AND RFIs.
LIST APPLICABLE SECTIONS AND RFIs BELOW:
B. REVIEW WORK PLANS AND DISCUSS PROCEDURES/SEQUENCES FOR ACCOMPLISHING WORK.
C. CLARIFY ANY DIFFERENCES.

QUALITY CONTROL TESTING AND INSPECTING		
A. IDENTIFY TESTS/INSPECTIONS TO BE PERFORMED AND BY WHOM.		
B. WHEN IS QUALITY CONTROL TESTING AND INSPECTING REQUIRED?		
C. WHERE IS QUALITY CONTROL TESTING AND INSPECTING REQUIRED?		
D. REQUIRED TESTS AND/OR INSPECTIONS NOTIFICATION -		HOURS
REVIEW APPLICABLE ITP FORMS:		

STORM WATER POLLUTION PREVENTION PLAN		
A. APPLICABLE SECTION OF EPP PLAN REVIEWED?	YES	
	NA	
B. APPLICABLE PERMITS ON FILE?	YES	
	NO	
COMMENT:		

SAFETY		
A. ACTIVITY HAZARD ANALYSIS AVAILABLE?	YES	
	NO	
COMMENT:		

TOOLS AND EQUIPMENT
A. LIST EQUIPMENT AND SPECIAL TOOLS REQUIRED TO PERFORM THE WORK.

OTHER ITEMS OR REMARKS

INITIAL CONTROL PHASE INSPECTION AGENDA

PROJECT NAME: C-43 WEST BASIN STORAGE RESERVOIR
CONTRACT NUMBER: CN XXXXXXXXXX
PACKAGE 4 - CIVIL WORKS

DEFINEABLE FEATURE OF WORK:	**DATE:**
PRIME CONTRACTOR:	
PROJECT SPECIFICATIONS:	
PROJECT DRAWING NOS.:	

ATTENDEES OF INSPECTION

NAME	POSITION	COMPANY

INITIAL INSPECTION CHECKLIST

A. PREPARATORY CONTROL PHASE INSPECTION MEETING CONDUCTED?	**YES**	☐
	NO	☐
B. DATE OF PREPARATORY CONTROL PHASE INSPECTION MEETING.		

C. REVIEW OF PREPARATORY MEETING COMMENTS.			
SPECIFIC COMMENTS:			
D. IS WORK IS PROCEEDING IN COMPLIANCE WITH THE CONTRACT?	YES NO		
NOTE ANY VARIANCES AND/OR DEFICIENCIES:			
E. ARE TESTING AND INSPECTION REQUIREMENTS IN COMPLIANCE WITH THE CONTRACT?	YES NO		
COMMENTS:			
F. DOES THE WORKMANSHIP EXCEED MINIMUM ACCEPTABLE STANDARDS?	YES NO		
LIST ANY WORK OUTSIDE CONSTRUCTION STANDARDS IDENTIFIED IN THE CONTRACT:			

G. ARE SAFETY REQUIREMENTS BEING OBSERVED?	YES		
	NO		

REVIEW ACTIVITY HAZARD ANALYSIS. LIST ANY CONCERNS BELOW:

OTHER COMMENTS, ISSUES OR CONCERNS

FINAL FOLLOW-UP CONTROL PHASE INSPECTION AGENDA

PROJECT NAME: C-43 WEST BASIN STORAGE RESERVOIR
CONTRACT NUMBER: CN XXXXXXXXXX
PACKAGE 4 - CIVIL WORKS

DEFINEABLE FEATURE OF WORK:	**DATE:**
PRIME CONTRACTOR:	
PROJECT SPECIFICATIONS:	
PROJECT DRAWING NOS.:	

ATTENDEES OF INSPECTION

NAME	POSITION	COMPANY

FOLLOW-UP PHASE CHECKLIST

A. HAS THE FEATURE OF WORK BEEN VERIFIED TO BE COMPLETED?	**YES**		
	NO		

COMMENTS:

B. HAVE ANY AND ALL DEFICIENCIES BEEN VERIFIED TO BE CORRECTED?	YES NO		
COMMENTS:			
C. HAS THE WORK BEEN VERIFIED TO BE COMPLETED IN COMPLIANCE WITH THE CONTRACT?	YES NO		
COMMENTS:			
D. HAVE THE TEST/INSPECTION REPORTS BEEN VERIFIED TO BE COMPLETE AND TRANSMITTED TO THE DISTRICT AS REQUIRED?	YES NO		
LIST ANY OUTSTANDING DOCUMENTATION:			
OTHER COMMENTS, ISSUES OR CONCERNS			

FINAL PUNCH OUT INSPECTION

PROJECT NAME: C-43 WEST BASIN STORAGE RESERVOIR
CONTRACT NUMBER: CN XXXXXXXXXXX

P4: CIVIL WORKS

CONTRACTOR:_____**DATE:**_____

DFOW:_____**ACTIVITY:**_____

AREA OF ACTIVITY:_____ **REPORT NO:**_____

PUNCH LIST ITEMS		CORRECTION COMMENT	ACCEPT-YES	ACCEPT-NO
1				
2				
3				
4				
5				
6				
7				
8				
9				
10				
11				
12				
13				
14				
15				
16				
17				
18				
19				
20				

_____ _____ _____ _____

CQC SYSTEMS MANAGER SIGNATURE **DATE** **PQACT MEMBER SIGNATURE** **DATE**

PRE-FINAL PUNCH LIST

PROJECT NAME: C-43 WEST BASIN STORAGE RESERVOIR
CONTRACT NUMBER: CN XXXXXXXXXXX

P4: CIVIL WORKS

CONTRACTOR:_____**DATE:**_____

DFOW:_____**ACTIVITY:**_____

AREA OF ACTIVITY:_____ **REPORT NO:**_____

PUNCH LIST ITEMS		DEFICIENCY
1		
2		
3		
4		
5		
6		
7		
8		
9		
10		
11		
12		
13		
14		
15		
16		
17		
18		
19		
20		

_____ _____ _____

CQC SYSTEMS MANAGER SIGNATURE **DATE** **PROPOSED DATE TO BE CORRECTED**

THREE PHASE INSPECTION SCHEDULE/LOG

PROJECT NAME: C-43 WEST BASIN STORAGE RESERVOIR
CONTRACT NUMBER: CN XXXXXXXXX
PACKAGE 4 - CIVIL WORKS

DEFINABLE FEATURE OF WORK	PREPARATORY CONTROL INSPECTION DATES			INITIAL CONTROL INSPECTION DATES			FINAL FOLLOW-UP CONTROL INSPECTION DATES		
	INITIAL (proposed)	UPDATED (estimated)	PERFORMED (actual)	INITIAL (proposed)	UPDATED (estimated)	PERFORMED (actual)	INITIAL (proposed)	UPDATED (estimated)	PERFORMED (actual)
CIVIL									
DEMOLITION									
ENVIRONMENTAL PROTECTION									
EROSION AND SEDIMENT CONTROL									
DISTRICT CONSTRUCTION COMPOUND									
LAYOUT									
CLEARING AND GRUBBING									
DITCH AND CANAL FILLING									
PAVING									
ACCESS ROAD IMPROVEMENT									
FENCING									
BOAT RAMPS									
SITE UTILITIES									
RIPRAP									
REVETMENT									
WAVE WALL									
RECREATION FEATURES									
GEOTECHNICAL									
DAM FOUNDATION PREPARATION									
TEMPORARY GEOTECHNICAL INSTRUMENTATION									
EARTHWORK - DAM EMBANKMENT FILL, SELLECT FILL, BENTONITE AMENDED SOIL AND GAP CLOSURES									
DEWATERING									
COFFERDAMS									
PRESSURE RELIEF SYSTEM									
SOIL BENTONITE WALL									
SOIL CEMENT SLOPE PROTECTION									
BLANKET DRAIN, CHIMNEY DRAIN, TOE DRAIN AND SLOPE PROTECTION UNDERDRAIN									
PERMANENT GEOTECHNICAL INSTRUMENTATION									

GRASSING									
MONITORING WELLS									
COFFERDAM TIE BACK SYSTEM									
STRUCTURAL									
LOCAL ACCESS BRIDGE									
SITE ACCESS BRIDGE									
ROOF SYSTEM INSTALLATION AND MISCELLANEOUS ROOF ACCESSORIES									
SLABS ON GRADE									
WALLS AND COLUMNS									
INSTALLATION OF SHEETPILE WINGWALLS									
SHEET PILING - VINYL									
PRECAST CONCRETE PILING									
MECHANICAL									
HVAC EQUIPMENT SYSYEM INSTALLATION									
VERTICAL LIFT GATES									
DISCHARGE PIPING									
VERTICAL AXIAL FLOW PUMPS									
ELECTRICAL									
LPG FUEL TANK MONITORING									
INSULATED WIRE AND CABLE									
LOW VOLTAGE OVERCURRENT DEVICE									
DISTRIBUTION SYSTEM									
ARC FLASH STUDY									
AUTOMATIC TRANSFER SWITCHES									
STANDBY GENERATOR AND LPG SYSTEM INSTALLATION									
LIGHTNING PROTECTION									
CATHODIC PROTECTION									
INTERIOR LIGHTING									
EXTERIOR LIGHTING									
LOW VOLTAGE MOTORS									
UNDERGROUND ELECTRIC DISTRIBUTION									
PROCESS CONTROL SYSTEM									
PAINT AND COATING									
PROTECTIVE COATING									
INSTRUMENTATION AND CONTROLS									
VERTICAL PROFILING SYSTEM									
RADIO TRANSMISSION SYSTEM									

THREE WEEK LOOK-AHEAD SCHEDULE

PROJECT NAME: C-43 WEST BASIN STORAGE RESERVOIR

CONTRACT NUMBER: CN XXXXXXXXX

PACKAGE 4 - CIVIL WORKS

DATE: XX/XX/XXXX

FEATURE OF WORK/WORK ACTIVITY	PREVIOUS WEEK							WEEK ENDING XX/XX/XXXX							WEEK ENDING XX/XX/XXXX							WEEK ENDING XX/XX/XXXX						
	M	T	W	T	F	S	S	M	T	W	T	F	S	S	M	T	W	T	F	S	S	M	T	W	T	F	S	S

CONTRACTOR DEFICIENCY/REWORK ITEM LOG

PROJECT NAME: C-43 WEST BASIN STORAGE RESERVOIR

CONTRACT NUMBER: CN XXXXXXXXX

PACKAGE 4 - CIVIL WORKS

PRIME CONTRACTOR: | **DATE PREPARED:** XX/XX/XXXX

ITEM NO.	DESCRIPTION OF NON-CONFORMING WORK	DATE IDENTIFIED	DATE CORRECTED	BREIEF DESCRIPTION OF REWORK CORRECTIVE ACTION TAKEN OR ACCEPTABLE AS IS & ACCEPTING DOCUMENT	VERIFIED BY (QC-INITIAL)	VERIFIED BY (QA-INITIAL)
1						
2						
3						
4						
5						
6						
7						
8						
9						
10						
11						
12						
13						
14						

WILDLIFE TRAINING / SSH (SSHO) LOG

PROJECT NAME: C-43 WEST BASIN STORAGE RESERVOIR
CONTRACT NUMBER: CN XXXXXXXXX
PACKAGE 4 - CIVIL WORKS

DATE	ATTENDEE (Please Print Name)	JOB TITLE DURING PROJECT	COMPANY	PHONE(s)	SIGNATURE

WILDLIFE SIGHTING REPORT

PROJECT NAME: C-43 WEST BASIN STORAGE RESERVOIR
CONTRACT NUMBER: CN XXXXXXXXX
PACKAGE 4 - CIVIL WORKS

☐ Eastern Indigo Snake	☐ Bald Eagle	☐ Wood Stork	☐ Florida Panther
☐ Caracara	☐ Burring Owl	☐ Gopher Tortoise	☐ Sandhill Crane
☐ Manatee	☐ Snail Lite	☐ Black Bear	☐ Other

Date of Sighting	/ /
Time of Sighting	: ☐ am ☐ pm
Temperature (°F)	°F
Wind (mph)	mph
Weather Conditions (ex: note sky cover, raining, humid, cloudy, sunny, cool, hot,etc.)	
Construction Activity Occuring	
Equipment being Used	
Condition of Animal (ex: injured, unharmed, etc.)	
Behavior of Animal (ex: disoriented, aggressive, frightened, calm, etc.)	
Actions Taken after Sighting	
Size of Animal	
GPS Coordinates & Specific Location	Lat: ° ' " N Long: ° ' " W
Pictures Taken (Attach pictures if available)	
Date this Form was Completed	/ /
Observers Company/Agency	
Observers Name	Print Name:

ACTUAL MONTHLY WEATHER CONDITIONS REPORT

PROJECT NAME: C-43 WEST BASIN STORAGE RESERVOIR

CONTRACT NUMBER: CN XXXXX
P4: CIVIL WORKS

CONTRACTOR:_____**MONTH:**_____**YEAR:**_____

DATE	W/C	% LOST	ACTIVITY DELAYED	REMARKS
1				
2				
3				
4				
5				
6				
7				
8				
9				
10				
11				
12				
13				
14				
15				
16				
17				
18				
19				
20				
21				
22				
23				
24				
25				
26				
27				
28				
29				
30				
31				

*WEATHER CONDITIONS
P – PRECIPITATION
T – EXTREME TEMPERATURES
M – MUDDY SITE CONDITIONS
W – EXTREME WINDS
G – GOOD

*TIME DELAYED
TOTAL WORK DAYS DELAYED>50% _____

REPORT COMPLETED BY:_____ **SIGNATURE:**_____

BMP INSPECTION LOG

PROJECT NAME: C-43 WEST BASIN STORAGE RESERVOIR
CONTRACT NUMBER: CN XXXXXXXXX
PACKAGE 4 - CIVIL WORKS

GENERAL INFORMATION

DATE OF INSPECTION:		DAY OF WEEK:		REPORT #:		REPORT PAGE:	
CONTRACTOR:				FDEP CGP TRACKING NUMBER:			
INSPECTOR: (print name)		INSPECTOR: (signature)		INSPECTOR'S TITLE:			
INSPECTOR'S CONTACT INFO:			INSPECTOR'S QUALIFICATIONS:				
DESCRIBE PRESENT PHASE OF CONSTRUCTION:							
TYPE OF INSPECTION:	☐ REGULAR	☐ PRE-STORM EVENT		☐ DURING STORM EVENT		☐ POST-STORM EVENT	

WEATHER INFORMATION

WEATHER AT THE TIME OF THIS INSPECTION:

☐	CLEAR	☐	CLOUDY	☐	RAIN	☐	SLEET
☐	FOG	☐	HIGH WINDS	☐	OTHER	(DESCRIBE OTHER)	

RAINFALL LOG:							COMMENTS
DATE	DATE	DATE	DATE	DATE	DATE	DATE	
INCHES	INCHES	INCHES	INCHES	INCHES	INCHES	INCHES	
TIME	TIME	TIME	TIME	TIME	TIME	TIME	

BMP/Activity	BMP INSTALLED?	BMP MAINTENANCE REQUIRED?	CORRECTIVE ACTION NEEDED AND NOTES
EROSION CONTROL FENCING	☐ YES ☐ NO	☐ YES ☐ NO	
DEWATERING BERM	☐ YES ☐ NO	☐ YES ☐ NO	

BMP INSPECTION LOG

PROJECT NAME: C-43 WEST BASIN STORAGE RESERVOIR
CONTRACT NUMBER: CN XXXXXXXXX
PACKAGE 4 - CIVIL WORKS

FUEL CONTAINMENT AREA	☐ YES ☐ NO	☐ YES ☐ NO	
WASH DOWN CONTAINMENT	☐ YES ☐ NO	☐ YES ☐ NO	
HAZARDOUS MATERIAL STORAGE	☐ YES ☐ NO	☐ YES ☐ NO	
STABILIZED CONSTRUCTION EXIT	☐ YES ☐ NO	☐ YES ☐ NO	
VEGETATION MANAGEMENT	☐ YES ☐ NO	☐ YES ☐ NO	
DEBRIS/WASTE MANAGEMENT	☐ YES ☐ NO	☐ YES ☐ NO	
ARE ALL SLOPES & DISTURBED AREAS NOT ACTIVELY BEING WORKED PROPERLY STABILIZED?	☐ YES ☐ NO	☐ YES ☐ NO	
ARE PERIMETER CONTROLS & SEDIMENT BARRIERS ADEQUATELY INSTALLED (TRENCHED IN) MAINTAINED?	☐ YES ☐ NO	☐ YES ☐ NO	
ARE DISCHARGE POINTS & RECEIVING WATERS FREE OF ANY SEDIMENT DEPOSITS?	☐ YES ☐ NO	☐ YES ☐ NO	
IS THE CONSTRUCTION EXIT PREVENTING SEDIMENT FROM BEING TRACKED INTO THE STREET?	☐ YES ☐ NO	☐ YES ☐ NO	
IS TRASH/LITTER FROM WORK AREAS COLLECTED & PLACED IN COVERED DUMPSTERS?	☐ YES ☐ NO	☐ YES ☐ NO	
ARE WASHOUT FACILITIES (e.g. PAINT, CONCRETE) AVAILABLE, CLEARLY MARKED & MAINTAINED?	☐ YES ☐ NO	☐ YES ☐ NO	
ARE VEHICLE AND EQUIPMENT FUELING, CLEANING AND MAINTENANCE AREAS FREE OF SPILLS AND LEAKS? - SPILL KIT MAINTAINED?	☐ YES ☐ NO	☐ YES ☐ NO	
ARE MATERIALS THAT ARE POTENTIAL STORMWATER CONTAINMENTS STORED INSIDE OR UNDER COVER?	☐ YES ☐ NO	☐ YES ☐ NO	
ARE NON-STORWATER DISCHARGES (e.g. WASH WATER, DEWATERING) PROPERLY CONTROLLED?	☐ YES ☐ NO	☐ YES ☐ NO	

BMP INSPECTION LOG

PROJECT NAME: C-43 WEST BASIN STORAGE RESERVOIR
CONTRACT NUMBER: CN XXXXXXXXX
PACKAGE 4 - CIVIL WORKS

(OTHER)	☐ YES ☐ NO	☐ YES ☐ NO	
(OTHER)	☐ YES ☐ NO	☐ YES ☐ NO	
(OTHER)	☐ YES ☐ NO	☐ YES ☐ NO	

INSPECTOR'S CERTIFICATION STATEMENT

"I certify under penalty of law that unless corrective actions are needed as noted above this project is in compliance with the State of Florida Generic Permit for stormwater Discharges from Large and Small Construction Activities."

PRINT NAME AND TITLE: _____

SIGNATURE: _____ **DATE:** _____

RESPONSIBLE AUTHORITY CERTIFICATION STATEMENT

" I certify under penalty of law that this document and all attatchments were prepared under my direction or supervision in accordance with a system designed to assure that qualified personnel properly gathered and evaluated the information submitted. Based on my inquiry of the person or persons who manage the system, or those persons directly responsible for gathering the information, the information submitted is, to the best of my knowledge and belief, true, accurate and complete. I am aware that there are significant penalties for submitting false information, including the possibility of fine and imprisonment for knowing violations."

PRINT NAME AND TITLE: _____

SIGNATURE: _____ **DATE:** _____

DAM FOUNDATION PREPARATION & MAPPING APPROVAL

PROJECT NAME: C-43 WEST BASIN STORAGE RESERVOIR
CONTRACT NUMBER: CN XXXXXXXXX
PACKAGE 4 - CIVIL WORKS

DEFINEABLE FEATURE OF WORK:	DAM FOUNDATION PREPARATION AND MAPPING		DATE:
PRIME CONTRACTOR:		SUPERINTENDENT:	
LOCATION:	SPECIFICATION #: 31 23 33		DRAWING #:
SPECIFIC AREA:		ELEVATION:	

SEGMENT STATIONS: FROM _____ TO _____

PREPARATION	NA	QC REP (INITALS)	DATE	QA REP (INITALS)	DATE
All submittals have been submitted to and approved by the District.	☐	_____	_____	_____	_____
Associated work plans have been submitted to and approved by the District and explained to workers. (Foundation Grade Plan, Proof of Concept Plan, Dewatering Plan)	☐	_____	_____	_____	_____
All RFIs have been submitted to and answered by the District.	☐	_____	_____	_____	_____
AHA has been submitted to and approved by the District and presented to the workers.	☐	_____	_____	_____	_____
The Preparatory Control Phase Inspection has been performed.	☐	_____	_____	_____	_____
All erosion and sediment control measures, as well as the project signage are in place prior to beginning any construction.	☐	_____	_____	_____	_____
Proof of Concept: The Contractor has demonstrated that means and methods utilized will accomplish the intended goals and meet the quality objectives for the project, as well as establish protocols for communication of schedule, inspection and documentation of the work.	☐	_____	_____	_____	_____

The area to be prepared and mapped has been surveyed & marked out by a Professional Survey Mapper, as specified, to the extent of having a length along the baseline of the dam of 500' and extends 50' beyond the toe of the dam on the reservoir side and 20' beyond the perimeter road.					
Proof of Concept: The Contractor has demonstrated that means and methods utilized will accomplish the intended goals and meet the quality objectives for the project, as well as establish protocols for communication of schedule, inspection and documentation of the work.					
Proof of Concept: The Contractor has completed and the District has accepted the Proof of Concept (at least 1,500 feet long, and be split into 500-foot long segments along the baseline of the dam). (The Proof of Concept shall be a necessary precedent prior to Notice to Proceed for the balance of the subgrade preparation work.)					
The Contractor has advised the District at least 24 hours in advance that the area (minimum 500' long segment) is ready for foundation mapping.					
The segment of the work has been approved by the District prior to the Contractor proceeding with embankment construction of any kind.					
INSPECTION	**NA**	**EOR** (INITALS)	**DATE**	**QA REP** (INITALS)	**DATE**
STRIPPING: The Contractor has removed topsoil and all sand with roots and other vegetative matter from the subgrade soils to the limits shown on the Drawings. (para.3.1)					

STRIPPING: The Contractor has removed topsoil to the depth required to reach sand subgrade that is free of roots and/or finely divided organic matter. (para.3.1)					
STRIPPING - STRIPPED GRADES REPRESENTING SUBGRADE FOR THE DAM: The Contractor has compacted the stripped grades to a dry density not less than 95% of the maximum dry density achieved in accordance with ASTM D1557, to a depth of at least 12" below stripped grade at the frequency of 1 test per 10,000 sf. (para.3.1, 3.12)					
STRIPPING - WITH ADDITIONAL EXCAVATION REQUIRED BELOW STRIPPED GRADE TO REACH SUBGRADE LEVELS: Once the subgrade has been achieved, the Contractor has compacted the subgrade to a dry density not less than 95% of the maximum dry density achieved in accordance with ASTM D1557, to a depth of at least 12" below stripped grade at the frequency of 1 test per 10,000 sf. (para.3.1, 3.12)					
STRIPPING - EXPOSED UNSUITABLE SOILS AT STRIPPED AND/OR SUBGRAGE LEVELS: The Contractor has overexcavated the unsuitable soils and materials, identified during mapping, from the footprint of the dam and to horizontal limits that extend to at least 50' beyond the toe of the dam. (para. 3.10)					
STRIPPING - EXPOSED UNSUITABLE SOILS AT STRIPPED AND/OR SUBGRAGE LEVELS: The Contractor accomplished the removal of such materials within a dewatered excavation where the groundwater level was maintained at least 2' below the excavtion bottom. (para. 3.10)					
STRIPPING - EXPOSED UNSUITABLE SOILS AT STRIPPED AND/OR SUBGRAGE LEVELS: The Contractor cut the excavation sideslopes to provide an overall slope of 4H:1V, and the slideslopes are benched in 1' vertical intervals to facilitate compaction of the backfill soils on the evcavation slope. (para. 3.10)					

STRIPPING - EXPOSED UNSUITABLE SOILS AT STRIPPED AND/OR SUBGRAGE LEVELS: After the excavation bottom and slopes were determined by the District to be free of unsuitable soils, the Contractor has compacted the excavation bottom to a dry density not less than 95% of the maximum dry density achieved in accordance with ASTM D1557, to a depth of at least 12" at the frequency of 1 test per 10,000 sf. (para.3.1, 3.12)					
STRIPPING - EXPOSED UNSUITABLE SOILS AT STRIPPED AND/OR SUBGRAGE LEVELS: The Contractor has backfill the inspected and approved excavations with Embankment Fill as described in Specification 31 00 00 EARTHWORK - EARTH DAM. (para. 3.10)					
REMOVAL OF BURIED CONDUIT: The Contractor has performed pre-trenching along the lines shown on the Drawings for exploration of and removal of existing buried irrigation and drainage (and all other) conduits within the limits shown on the Drawings. (para. 3.2)					
REMOVAL OF BURIED CONDUIT: The Contractor has documented the removal of all conduits using survey control with an accuracy of one foot horizontal and 0.1 foot vertical. (para. 3.2)					
REMOVAL OF BURIED CONDUIT: The bottom of excavations made to remove buried conduits have been compacted to a dry density not less than 95% of the maximum dry density achieved in accordance with ASTM D1557, to a depth of at least 12" below grade at the frequency of 1 test per 200 lf with a minimum of 1 test per pre-trench. (para. 3.2, 3.12)					
RECLAMATION OF CANALS AND 10TH ROW DITCHES: Before beginning excavation of the existing canals and 10th Row Ditches associated with the former citrus grove, dewatering has been established and maintained by the Contractor to allow for excavations and inspection of the excavations in a dry condition. (para. 3.4)					

RECLAMATION OF CANALS AND 10TH ROW DITCHES: The Contractor has excavated to remove all vegetation, roots, and soft sediments from the existing canals and 10th Row Ditches associated with the former citrus grove. The excavations are completed in the manner shown on the Drawings. (para. 3.4)					
RECLAMATION OF CANALS AND 10TH ROW DITCHES: The bottom of excavations made to reclaim canals and ditches have been compacted to a dry density not less than 95% of the maximum dry density achieved in accordance with ASTM D1557, to a depth of at least 12" below grade at the frequency of 1 test per 200 lf with a minimum of 1 test per ditch/canal. (para. 3.4)					
RECLAMATION OF CANALS AND 10TH ROW DITCHES: The Contractor has backfilled the inspected and approved excavations with Embankment Fill as described in Specification 31 00 00 EARTHWORK - EARTH DAM. (para 3.4)					
RECLAMATION OF CANALS AND 10TH ROW DITCHES: Ditch sideslopes have been cut to provide an overall average slope of 4 horizontal to 1 vertical (4H:1V), and the sideslopes have been benched in 1' vertical intervals to facilitate compaction of the backfill soils on the ditch/canal slopes. (para. 3.4)					
RECLAMATION OF CANALS AND 10TH ROW DITCHES: Major canal crossing sideslopes have been cut to provide an overall average slope of 6H:1V, and have been benched in 1' vertical intervals to facilitate compaction of the backfill soils on the ditch/canal slopes. (para 3.4)					
PREPARED FOUNDATION SOIL SEGMENT: Each segment is field marked by the Contractor with stakes located 50 feet on center. The stakes are referenced to the project baseline of stationing. (para. 3.6)					

PREPARED FOUNDATION GRADE STATUS REPORT: The Contractor has submitted a written report on a weekly basis, that summarizes the areas where embankment foundation grades were prepared during the previous week, using project Station-Offset or other agreed upon (by the District) geo-spatial reference system as specified in section 31 23 13 para. 3.8 PREPARED FOUNDATION GRADE STATUS REPORT.					
STRUCTURE FOUNDATION SOIL PREPARATION: Foundation soils for hydraulic structures have been treated and compacted in accordance with notes shown on the Drawings. (para. 3.11)					
STRUCTURE FOUNDATION SOIL PREPARATION: For Control Buildings, RTU foundations and other miscellaneous structures, the structure foundation soils have been compacted to not less than 95 percent of the maximum dry density determined in accordance with ASTM D1557 to a depth of 12 inches below the foundation grade at the frequency of 1 test per 10,000 sf of structural footpring, with a minimum of 1 test per footprint. (para. 3.11, 3.12)					
FOUNDATION SOIL MAPPING: The Contractor has given the District 24 hours advance notification that the 500 lf. segment is ready for inspection.					
FOUNDATION SOIL MAPPING: The District has inspected has inspected the 500 lf segment, including the use of arial drone, the examination of the Contractor's QC laboratory Soil Classification test reports (ASTM D2487), Soil Gradation test reports (ASTM C136/C136M), the IN-Place Density test reports (ASTM D6938), the Amount of Material in Soils Finer than the No. 200 Sieve test reports, along with visual inspections.					
FOUNDATION SOIL MAPPING: The District has inspected and mapped the 500 lf foundation segment and has found the segment to be unsatisfactory for preparation approval. The District has commented (below) on the unsatisfactory conditions. The Contractor is restrained from proceeding with embankment work of any kind.					

FOUNDATION SOIL MAPPING: The District has inspected and mapped the 500 lf foundation segment and has found the segment to be satisfactory for preparation approval.

☐ _____ _____ _____ _____

OBSERVATIONS

COMMENTS

AREA FOR DRAWING

SIGNATURE OF ENGINEER OF RECORD DATE

SIGNATURE OF QUALITY ASSURANCE REPRESENTATIVE DATE

"COFFERDAM MONITOR WELLS"
PROJECT NAME: C-43 WEST BASIN STORAGE RESERVOIR
CONTRACT NUMBER: CN XXXXXXXXX
FORM TO BE ADJUSTED ONCE CONTRACTOR'S DEWATERING PLAN HAS BEEN APPROVED BY THE DISTRICT
P4: CIVIL WORKS

DEFINEABLE FEATURE OF WORK:	**DATE:**
PRIME CONTRACTOR:	**SUPERINTENDENT:**
LOCATION: COFFERDAM	**QC REPRESENTATIVE:**
SPECIFIC AREA: INSIDE AND OUTSIDE COFFERDAM	**SPECIFICATION #:** 31 52 10 / **DRAWING #:**

PREDRAIN CRITERIA

1. TARGET DEWATERING ELEVATION:
2. TARGET DAYS TO HOLD DEWATERING ELEVATION:
3. MONITORING WELLS TO ACHIEVE INTERIOR ELEVATION:

COFFERDAM CRITERIA

1. INTERIOR WALL DEWATER ELEVATION:
2. EXTERIOR WALL DEWATER ELEVATION:
3. INTERIOR MONITORING WELLS:
4. EXTERIOR MONITORING WELLS:

SKETCH OF MONITORING WELLS LAYOUT

DATE	MW ID HERE		MW ID HERE		MW ID HERE		MW ID HERE		MW ID HERE		MW ID HERE		MW ID HERE		MW ID HERE		MW ID HERE		MW ID HERE		MW ID HERE		MW ID HERE	
	TOC EL.(')		TOC EL.(')		TOC EL.(')		TOC EL.(')		TOC EL.(')		TOC EL.(')		TOC EL.(')		TOC EL.(')		TOC EL.(')		TOC EL.(')		TOC EL.(')	
	DEPTH(')	EL.(')	DEPTH(')	EL.(')	DEPTH(')	EL.(')	DEPTH(')	EL.(')	DEPTH(')	EL.(')	DEPTH(')	EL.(')	DEPTH(')	EL.(')	DEPTH(')	EL.(')	DEPTH(')	EL.(')	DEPTH(')	EL.(')	DEPTH(')	EL.(')	DEPTH(')	EL.(')

DATE	MW ID HERE		MW ID HERE		MW ID HERE		MW ID HERE		MW ID HERE		MW ID HERE		MW ID HERE		MW ID HERE		MW ID HERE		MW ID HERE		MW ID HERE		MW ID HERE	
	TOC EL.(')		TOC EL.(')		TOC EL.(')		TOC EL.(')		TOC EL.(')		TOC EL.(')		TOC EL.(')		TOC EL.(')		TOC EL.(')		TOC EL.(')		TOC EL.(')	
	DEPTH(')	EL.(')	DEPTH(')	EL.(')	DEPTH(')	EL.(')	DEPTH(')	EL.(')	DEPTH(')	EL.(')	DEPTH(')	EL.(')	DEPTH(')	EL.(')	DEPTH(')	EL.(')	DEPTH(')	EL.(')	DEPTH(')	EL.(')	DEPTH(')	EL.(')	DEPTH(')	EL.(')

TURBIDITY MONITORING LOG

PROJECT NAME: C-43 WEST BASIN STORAGE RESERVOIR
CONTRACT NUMBER: CN XXXXXXXXXX
PACKAGE 4 - CIVIL WORKS

Multiple work areas that may contribute to turbidity in receiving waters must be monitored separately. A site map depicting sampling locations must accompany the quarterly turbidity monitoring reports.

PRIME CONTRACTOR: _____ COLLECTION DATE: _____

COLLECTOR'S NAME: _____ PERMIT NUMBER: _____

METER MANUFACTURER AND IDENTIFICATION NUMBER:

WATER OBSERVATION		WEATHER OBSERVATION			
BODY OF WATER BEING MONITORED:	TOWNSEND CANAL	MINIMUM TEMPERATURE:		WEATHER CONDITIONS:	
WATER DEPTH:		MAXIMUM TEMPERATURE:			
DIRECTION OF FLOW:		WIND:	mph	DIRECTION:	

ACTIVITIES TAKING PLACE DURING OR BEFORE THE TIME OF SAMPLING	NO	YES	IF YES, BRIEF DETAIL
WAS ANY DREDGING TAKING PLACE IN THE TOWNSEND CANAL?			
WAS ANY CONSTRUCTION TAKING PLACE WITHIN 50' THE TOWNSEND CANAL?			
WAS ANY OTHER IN-WATER WORK TAKING PLACE IN THE TOWNSEND CANAL?			
WAS ANY BOATING TAKING PLACE IN THE TOWNSEND CANAL?			
WAS ANY DISCHARGE OR HEAVY RUNOFF TAKING PLACE IN THE TOWNSEND CANAL?			

TURBIDITY MONITORING DATA			
CONTRACTOR COMPLIANCE STATION DATA:	A.M. MID-DEPTH	P.M. MID-DEPTH	LOCATION DESCRIPTION
COLLECTION TIME			
TURBIDITY READING (NTUs)			
FDEP COMPLIANCE STATION DATA:	A.M. MID-DEPTH	P.M. MID-DEPTH	LOCATION DESCRIPTION
COLLECTION TIME			
TURBIDITY READING (NTUs)			
BACKGROUND STATION DATA:	A.M. MID-DEPTH	P.M. MID-DEPTH	LOCATION DESCRIPTION
COLLECTION TIME			
TURBIDITY READING (NTUs)			

TURBITY MONITORING DATA REVIEW

DID A.M. MID-DEPTH CONTRACTOR'S COMPLIANCE SAMPLE (NTUs) EXCEED MID-DEPTH BACKGROUND SAMPLE BY MORE THAN 29 NTUs? ☐ NO ☐ YES

IF YES, DESCRIBE CORRECTIVE ACTION TAKEN AND IMMEDIATELY STOP WORK CONTRIBUTING TO EXCESSIVE TURBIDITY:

DID P.M. MID-DEPTH CONTRACTOR'S COMPLIANCE SAMPLE (NTUs) EXCEED MID-DEPTH BACKGROUND SAMPLE BY MORE THAN 29 NTUs? ☐ NO ☐ YES

IF YES, DESCRIBE CORRECTIVE ACTION TAKEN AND IMMEDIATELY STOP WORK CONTRIBUTING TO EXCESSIVE TURBIDITY:

STATEMENT OF AUTHENTICITY: I CERTIFY THIS TEST WAS PERFORMED AS REQUIRED BY CHAPTER 61-160, F.A.C., CONDUCTED WITH AN APPROVED INSTRUMENT CALIBRATED IN ACCORDANCE WITH THE APPROPRIATE FDEP-SOPs. The results are complete and accurate.

PRINT NAME: SIGNATURE:

SHEETPILE DRIVING RECORD

PROJECT NAME: C-43 WEST BASIN STORAGE RESERVOIR

CONTRACT NUMBER: CN XXXXXXXXX

P4: CIVIL WORKS

DEFINEABLE FEATURE OF WORK:		**DATE:**
PRIME CONTRACTOR:	**SUPERINTENDENT:**	
LOCATION:	**SPECIFICATION #:** 31 41 26, 31 52 10	**DRAWING #:**
SPECIFIC AREA:	**PILE DRIVING EQUIPMENT:**	

PILE #	PILE DESIGNATION	PILE LENGTH	GROUND SURFACE ELEVATION	PILE TOP ELEVATION	PILE TIP ELEVATION	TARGET - PILE TIP EL.	PILE TIP DIFFERENCE	PLUMBNESS / FT - (IN)	REMARKS / COMMENTS

WEEKLY SHEETPILE DEFLECTION LOG

PROJECT NAME: C-43 WEST BASIN STORAGE RESERVOIR
CONTRACT NUMBER: CN XXXXXXXXX

P4: CIVIL WORKS

DEFINEABLE FEATURE OF WORK:	**DATE:**
PRIME CONTRACTOR:	**SUPERINTENDENT:**
CQCSM:	**INSPECTOR:**
ACTIVITIES BEING PERFORMED TODAY:	

REQUIREMENTS	REQUIREMENT COMPLETE/PERFORMED?						INSPECTOR'S INITIALS
Have the cofferdam components been inspected prior to start of work today?		YES		NO		N/A	
(GIVE DETAILS)							
Have horizontal control survey points on top of temporary walls been established, not greater than 20' horizontal spacing on all sides of excavation shoring system?		YES		NO		N/A	
(GIVE DETAILS)							
Have at least 2 initial baseline surveys been performed on different days of horizontal positioning of the shoring to an accuracy of 0 01'?		YES		NO		N/A	
(GIVE DETAILS)							

*******On a weekly basis, until backfilling is complete, perform survey measurements and submit to the District.**

SIGNATURE OF INSPECTOR: _____ **DATE:** _____

SIGNATURE OF CQCSM: _____ **DATE:** _____

BACKFILLING AND COMPACTION CHECKLIST

PROJECT NAME: C-43 WEST BASIN STORAGE RESERVOIR
CONTRACT NUMBER: CN XXXXXXXXX
PACKAGE 4 - CIVIL WORKS

DEFINEABLE FEATURE OF WORK:		DATE:
PRIME CONTRACTOR:	SUPERINTENDENT:	
LOCATION:	SPECIFICATION #:	DRAWING #:
SPECIFIC AREA:	ELEVATION/LIFT:	

☐ SUBGRADE ☐ FILL ☐ PIPE FILL ☐ CONCRETE SUBGRADE

☐ ROAD ☐ BEDDING ☐ OTHER: _____

PREPARATION	NA	QC REP (INITALS)	DATE	QA REP (INITALS)	DATE
All submittals have been approved by the District.	☐				
AHA is in place and presented to the workers.	☐				
Preparatory Phase meeting has been performed.	☐				
Associated work plans have been defined & explained to workers.	☐				
All utility have been located and marked or removed.	☐				
All utility lines to remain have been disconnected and tested.	☐				
All remaining underground lines have been marked & taped.	☐				
The area to be backfilled has been surveyed & marked out.	☐				
The area to be backfilled has been cleared of debris.	☐				
The area to be backfilled has been cleared of standing water.	☐				

Material has been tested and meets specifications.	☐				
Material and equipment have been placed to perform backfill work.	☐				
Testing and surveying personnel are ready to monitor activities.	☐				

PLACEMENT OF BACKFILL	NA	QC REP (INITALS)	DATE	QA REP (INITALS)	DATE
Material have been placed in required lifts.	☐				
Material has been compacted per the work plan.	☐				
Field density testing has been performed as required.	☐				
The final level has been checked against the drawings.	☐				
The Initial Phase Inspection been performed?	☐				

OBSERVATIONS

COMMENTS

AREA FOR DRAWING

SIGNATURE OF QUALITY CONTROL REPRESENTATIVE DATE

SIGNATURE OF QUALITY ASSURANCE REPRESENTATIVE DATE

CONCRETE PRE-PLACEMENT INSPECTION CHECKLIST

PROJECT NAME: C-43 WEST BASIN STORAGE RESERVOIR
CONTRACT NUMBER: CN XXXXXXXXX
PACKAGE 4 - CIVIL WORKS

DEFINEABLE FEATURE OF WORK:		
PRIME CONTRACTOR:	**SUPERINTENDENT:**	
LOCATION:	**SPECIFICATION #:**	**DRAWING #:**
SPECIFIC AREA:	**ELEVATION/LIFT:**	

☐ BASEMENT ☐ FOOTING ☐ FLOOR ☐ FOUNDATION WALL
☐ PAD ☐ PIPING ☐ STRUCTURAL ☐ OTHER: _____

INSPECTION ITEM	NA	QC REP (INITIALS)	DATE	QA REP (INITIALS)	DATE
1.0 PLANS					
1.2 All plans have been reviewed that affect this pour.	☐				
2.0 RE-BAR					
2.1 All re-bar is clean and free of rust, scale, pitting and excessive concrete splatter.	☐				
2.2 Size and spacing of the re-bar is in conformance to the detailed plans and approved shop drawings.	☐				
2.3 Rebar is installed in accordance with the approved shop drawings.	☐				
2.4 Re-bar conforms to the proper clearance from the forms to provide the required concrete cover.	☐				
2.5 Re-bar has the proper clearance from waterstops and sleeves.	☐				
2.6 Tie wire is bent away from the forms to provide the required concrete cover and loose wire is removed.	☐				
2.7 Form savers, corner bars and dowels have been installed as required for adjacent pours.	☐				

INSPECTION ITEM	NA	QC REP (INITIALS)	DATE	QA REP (INITIALS)	DATE
3.0 FORMS					
3.1 A thorough coating of form release agent has been applied to form surfaces in contact with concrete.	☐				
3.2 Forms have been installed in the proper locations.	☐				
3.3 Forms are in compliance with the specified tolerance of 1/4" in any 10' with no offsets.	☐				
3.4 Forms are mortar tight.	☐				
3.5 Form work is properly alligned and adequately supported.	☐				
3.6 Scaffolding/falsework is installed in accordance with acceptable shop drawings.	☐				
3.7 Chamfer strips have been installed at edges and vertical construction joints as required.	☐				
3.8 Metal embeds have been properly installed (i.e.trash, rake base embed, grating supports, pump cans, etc.).	☐				
3.9 Forms are clean and free of any mortar or debris.	☐				
3.10 All construction joints are in the correct location and the correct type.	☐				
4.0 WATER STOP					
4.1 Water stops are properly installed with bulb centered in the construction joint.	☐				
4.2 Water stop are secured to insure no movement will occur during concrete placement.	☐				
4.3 Water stops are terminated 6" from all ends of pour.	☐				
4.4 Field butt welds and shop made splices are provided per Samples and properly installed.	☐				
4.5 Water stops are clean (free of dirt, mortar, sawdust, grease, release agent or any other material that would prohibit seal).	☐				

INSPECTION ITEM	NA	QC REP (INITIALS)	DATE	QA REP (INITIALS)	DATE
5.0 BLOCK-OUTS, EMBEDS, CONDUIT, SLEEVES, GROUNDING, PIPE					
5.1 Required block-outs, conduit and pipe sleeves have been properly installed.	☐				
5.2 Ground conductors have been installed in accordance with the excepted grounding and lightning protection shop drawings.	☐				
5.3 All items are properly secured to insure no movement will occur during concrete placement.	☐				
5.4 All items are installed in the correct location and orientation.	☐				
5.5 Mass Concrete: All temperature sensors are properly located and installed.	☐				

OBSERVATIONS

AREA FOR DRAWING IF NEEDED

COMMENTS

INSPECTION COMPLETED

SIGNATURE OF QUALITY CONTROL REPRESENTATIVE DATE

SIGNATURE OF QUALITY ASSURANCE REPRESENTATIVE DATE

dr

PRE-INSTALL MASONRY CHECKLIST

PROJECT NAME: C-43 WEST BASIN STORAGE RESERVOIR
CONTRACT NUMBER: CN XXXXXXXXX

P4: CIVIL WORKS

DEFINEABLE FEATURE OF WORK:	**DATE:**
PRIME CONTRACTOR:	**SUPERINTENDENT:**
CQCSM:	**INSPECTOR:**
ACTIVITIES BEING PERFORMED TODAY:	

INSPECTION ITEM	NA	QC REP (INITALS)	DATE	QAC REP	DATE
Have materials been approved? (GIVE DETAILS)					
Have masonry units been covered and protected from precipitation? (GIVE DETAILS)					
Have mock-up panels been constructed for each type and color of masonry required? (GIVE DETAILS)					
Are steel reinforcing bars, coated anchors, ties, and joint reinforcement stored above the ground and are steel reinforcing bars and uncoated ties free of loose mill scale and loose rust? (GIVE DETAILS)					
Are cementitious material stored in dry, weathertight enclosures or completely cover and is sand and aggregates stored in a manner to prevent contamination and segregation? (GIVE DETAILS)					

When ambient air temperature exceeds 100 degrees F, or exceeds 90 degrees F and the wind velocity is greater than 8 mph, has contractor complied with TMS MSJC Article 1.8 D for preparation prior to conducting masonry work?					
(GIVE DETAILS)					
When ambient temperature is below 40 degrees F, has contractor complied with TMS MSJC Article 1.8 C for preparation prior to conducting masonry work?					
(GIVE DETAILS)					
Have surfaces adjacent and near work areas protected from mortar and splash stains?					
(GIVE DETAILS)					
Are required temporary bracings provided?					
(GIVE DETAILS)					
Has concrete been cleaned of laitance, dust, dirt, oil, organic matter, or other foreign materials and slightly roughened to provide a surface texture with a depth of at least 1/8 inch.					
(GIVE DETAILS)					
Have shelf angles been adjusted as required to keep the masonry level and at the proper elevation?					
(GIVE DETAILS)					

SIGNATURE OF INSPECTOR: _____ **DATE:** _____

SIGNATURE OF CQCSM: _____ **DATE:** _____

CERTIFICATE OF HYDROSTATIC / PNEUMATIC TEST

PROJECT NAME: C-43 WEST BASIN STORAGE RESERVOIR
CONTRACT NUMBER: CN XXXXXXXXX
PACKAGE 4 - CIVIL WORKS

DEFINEABLE FEATURE OF WORK:		**DATE:**
PRIME CONTRACTOR:	**SUPERINTENDENT:**	
LOCATION:	**SPECIFICATION #:**	**DRAWING #:**
SPECIFIC AREA:	**SPECIFIC MATERIAL:**	
SYSTEM:	**LIMITS OF TEST:**	**REFERENCE #:**
TEST CONDUCTED: ☐ **HYDROSTATIC**	☐ **PNEUMATIC**	
TEST PRESSURE:	**TEST DURATION:**	
GAUGE MODEL / SERIAL #:	**GAUGE LOCATION:**	

TIME	PRESSURE READING (psi)	COMMENTS

QUALITY CONTROL REPRESENTATIVE

QUALITY ASSURANCE REPRESENTATIVE

QUALITY CONTROL REPRESENTATIVE SIGNATURE

DATE

QUALITY ASSURANCE REPRESENTATIVE SIGNATURE

DATE

dr

DRAINAGE PIPE WATERLINE/ DISCHARGE PIPE INSPECTION CHECKLIST

PROJECT NAME: C-43 WEST BASIN STORAGE RESERVOIR
CONTRACT NUMBER: CN XXXXXXXXX

P4: CIVIL WORKS

DEFINEABLE FEATURE OF WORK:	**DATE:**
PRIME CONTRACTOR:	**SUPERINTENDENT:**
CQCSM:	**INSPECTOR:**
ACTIVITIES BEING PERFORMED TODAY:	

INSPECTION ITEM	NA	QC REP (INITALS)	DATE	QAC REP	DATE
Has the trenching and backfilled been performed in accordance with Section 31 00 00 EARTHWORK?					
(GIVE DETAILS)					
Are all pipe larger than 24" joined in the trench?					
(GIVE DETAILS)					
If pipe less than 24" has been joined, prior to placement, in the trench has proper care been taken during placement to ensure the soundness of the joined sections?					
(GIVE DETAILS)					
Are all pipe joints lap welded slip joints unless indicated otherwise?					
(GIVE DETAILS)					
Are flanged joints where specified made with gaskets and bolting materials and made according to Manufacturer's recommendations and the requirements of AWWA M11?					
(GIVE DETAILS)					
Are all bolts tightened using procedures and recommended torque rates described in AWWA C604?					

(GIVE DETAILS)					
Are all couplings installed according to the Manufacturer's recommendations?					
(GIVE DETAILS)					
Field Painting: Manufacturer shall furnish Contractor with an adequate quantity of touch-up paint?					
(GIVE DETAILS)					
Field Painting: Has the contractor coordinated painting with pump and flap valve Manufacturers to insure consistency?					
(GIVE DETAILS)					
Field Painting: Has the contractor touched-up coatings damaged during shipment or installation?					
(GIVE DETAILS)					

SIGNATURE OF INSPECTOR: _____ **DATE:** _____

SIGNATURE OF CQCSM: _____ **DATE:** _____

STEEL DOORS, WINDOWS & FRAMES CHECKLIST

PROJECT NAME: C-43 WEST BASIN STORAGE RESERVOIR
CONTRACT NUMBER: CN XXXXXXXXX

P4: CIVIL WORKS

DEFINEABLE FEATURE OF WORK:	**DATE:**
PRIME CONTRACTOR:	**SUPERINTENDENT:**
CQCSM:	**INSPECTOR:**
ACTIVITIES BEING PERFORMED TODAY:	

INSPECTION ITEM	NA	QC REP (INITALS)	DATE	QAC REP	DATE
STEEL DOORS & FRAMES -Frames: Have frames been set in accordance with SDI/DOOR A250.11?					
(GIVE DETAILS)					
STEEL DOORS & FRAMES -Frames: Have frames been installed in accordance with 3.1.1 Frames of section 08 11 13?					
(GIVE DETAILS)					
STEEL DOORS & FRAMES -Doors: Have doors been hung in accordance with clearances specified in SDI/DOOR A250.8?					
(GIVE DETAILS)					
STEEL DOORS & FRAMES -Protection: Have doors and frames been protected from damage? If needed, have damaged doors and frames, prior to completion and acceptance of the project, been repaired or replace with new, as directed?					
(GIVE DETAILS)					
STEEL DOORS & FRAMES -Protection: Has rust been completely removed using a wire brush?					

(GIVE DETAILS)					
STEEL DOORS & FRAMES -Protection: After thoroughly cleaning, has an all-over coat of rust-inhibitive paint been applied of the same type used for shop coat?					
(GIVE DETAILS)					
STEEL DOORS & FRAMES -Cleaning: Upon completion, have the exposed surfaces of doors and frames been thoroughly cleaned? Have mastic smears and other unsightly marks been removed?					
(GIVE DETAILS)					
STEEL WINDOWS: Has the window manufacturer, or its authorized representative installed the windows in accordance with the manufacturer's published directions, reviewed shop and erection details?					
(GIVE DETAILS)					
STEEL WINDOWS: Have the windows been set in place level, square, plumb and weathertight without bowing or twisting? Has the frame been set in openings and shim into position as required?					
(GIVE DETAILS)					
STEEL WINDOWS -Fastenings (Concrete and Masonry Openings): Have frames been secure with 1/4 inch diameter, minimum, machine screws in concrete expansion anchors at 24 inches o.c. maximum?					
(GIVE DETAILS)					
STEEL WINDOWS -Fastenings (Sealing): Have all metal to metal joints been bedded and all fastenings penetrations sealed to frames and corner joints with specified butyl base sealant?					
(GIVE DETAILS)					

STEEL WINDOWS -ADJUSTMENT AND LUBRICATION: Have operable lights and operator hardware been adjusted and lubricated for smooth and easy operation with all weather stripping in uniform contact?					
(GIVE DETAILS)					
DOOR HARDWARE -Products: Has the contractor provided the products in accordance with PART 2 PRODUCTS of section 08 71 00?					
(GIVE DETAILS)					
DOOR HARDWARE -INSTALLATION: Has the contractor installed products in accordance with manufacturers' printed installation instructions and 3.1 and 3.2 of section 08 71 00?					
(GIVE DETAILS)					
DOOR HARDWARE: After installation, Has hardware been protected from paint, stains, blemishes, and other damage until acceptance of work?					
(GIVE DETAILS)					
DOOR HARDWARE: Has the contractor submitted notice of testing 15 days before scheduled, so that testing can be witnessed by the District?					
(GIVE DETAILS)					
DOOR HARDWARE: Have locks, latches, bolts, holders, closers, and other items been adjusted to operate properly?					
(GIVE DETAILS)					
DOOR HARDWARE: Has the contractor demonstrated that permanent keys operate respective locks, and given keys to the District?					
(GIVE DETAILS)					
DOOR HARDWARE: Has the contractor corrected, repaired, and finished errors in cutting and fitting and damage to adjoining work?					
(GIVE DETAILS)					

GLASS & GLAZING -Has the contractor installed the glass and glazing in accordance with section 08 81 00 GLASS & GLAZING?		_____	_____	_____	_____
(GIVE DETAILS)					

SIGNATURE OF INSPECTOR: _____ **DATE:** _____

SIGNATURE OF CQCSM: _____ **DATE:** _____

PRE-ENGINEERED COMPONENTS INSPECTION CHECKLIST

PROJECT NAME: C-43 WEST BASIN STORAGE RESERVOIR

CONTRACT NUMBER: CN XXXXXXXXX

PACKAGE 4 - CIVIL WORKS

DEFINEABLE FEATURE OF WORK:	**DATE:**
PRIME CONTRACTOR:	**CQCSM:**
SPECIFICATION #:	**DRAWING #:**
MANUFACTURER:	**LOCATION:**
COMPONENT OF INSPECTION:	

INSPECTION ITEM	NA	QC REP (INITIALS)	DATE	QA REP (INITIALS)	DATE
Contractor has provided certifications to the District from the manufacturer. (GIVE DETAILS)	☐	_____	_____	_____	_____
Contractor has provided certifications for the manufacturer's designer, engineer or other required. (GIVE DETAILS)	☐	_____	_____	_____	_____
Contractor has inspected the pre-engineered item(s) and provided the District with a report of the inspection. (GIVE DETAILS)	☐	_____	_____	_____	_____
Contractor has provided to the District required tests to be performed by the manufacturer. (GIVE DETAILS)	☐	_____	_____	_____	_____

District has visited the manufacturer and provided a list of deficiencies to the contractor.					
(GIVE DETAILS)					
Contractor has ensured the deficiencies from the District Deficiency List were corrected.					
(GIVE DETAILS)					
The manufacturer has prepared and shipped the pre-engineered item(s) according to specifications.					
(GIVE DETAILS)					
The pre-engineered item(s) has/have been inspected by the contractor upon arrival for deficiencies or damages.					
(GIVE DETAILS)					
Contractor has stored and protected the pre-engineered item(s) according to manufacturer's recommendation and in accordance with the specifications.					
(GIVE DETAILS)					
Contractor has received manufacturer's recommendations concerning the handling, storage, protection and installation of the pre-engineered item(s).					
(GIVE DETAILS)					
Contractor has submitted all test reports to the District from the manufacturer for the pre-engineered item(s).					
(GIVE DETAILS)					
Contractor has received from the manufacturer and submitted to the District any instruction manuals or O&M manuals.					
(GIVE DETAILS)					

Contractor has received from the manufacturer and submitted to the District applicable warranties for the pre-engineered item(s).		_____	_____	_____	_____
(GIVE DETAILS)					

SIGNATURE OF INSPECTOR: _____ **DATE:** _____

SIGNATURE OF CQCSM: _____ **DATE:** _____

STRUCTURAL STEEL INSPECTION CHECKLIST

PROJECT NAME: C-43 WEST BASIN STORAGE RESERVOIR
CONTRACT NUMBER: CN XXXXXXXXX
PACKAGE 4 - CIVIL WORKS

DEFINEABLE FEATURE OF WORK:	**DATE:**
PRIME CONTRACTOR:	**SUPERINTENDENT:**
CQCSM:	**INSPECTOR:**
ACTIVITIES BEING PERFORMED TODAY:	

INSPECTION ITEM	NA	QC REP (INITIALS)	DATE	QA REP (INITIALS)	DATE
Welds -Visual Inspection: The contractor has furnished the services of AWS-certified welding inspectors for fabrication/erection inspection and testing and verification inspections.					
(GIVE DETAILS)					
Welds -Visual Inspection: The certified welding inspector has inspected proper preparation, size, gaging location, and acceptability of welds; identification marking; operation and current characteristics of welding sets in use prior to District inspection.					
(GIVE DETAILS)					
Welds -Nondestructive Testing: Nondestructive testing is in accordance with AWS D1.1/D1.1M. (Test locations must be selected by the District.)					
(GIVE DETAILS)					
Welds -Nondestructive Testing: Do less than 25% of welds made by a welder contain defects identified by testing? If no, have all welds made by that welder been tested by ultrasonic testing, as approved by the District.					
(GIVE DETAILS)					

Welds -Nondestructive Testing: When all welds made by an individual welder were required to be tested, magnetic particle testing were used only in areas inaccessible to ultrasonic testing.					
(GIVE DETAILS)					
Welds -Nondestructive Testing: Defective areas have been retested after repair. The contractor has submitted weld inspection reports.					
(GIVE DETAILS)					
Direct Tension Indicator Washer Compression: Direct tension indicator washers have been tested in place as specified in 3.7.2.1 of section 05 12 00.					
(GIVE DETAILS)					
Testing Bolt, Nut, and Washer Assemblies: A minimum of 3 bolt, nut, and washer assemblies from each mill certificate batch has been tested in a tension measuring device, at the job site, prior to the beginning of bolting start-up, demonstrating that the bolts and nuts, when used together, can develop tension not less than the provisions specified in AISC 360, depending on bolt size and grade? The contractor has submitted testing report.					
(GIVE DETAILS)					
Testing Bolt, Nut, and Washer Assemblies: The District has been notified in writing of defective welds, bolts, nuts, and washers within 7 working days of the date of the inspection.					
(GIVE DETAILS)					
High-Strength Bolts -Inspection: Inspection procedures are in accordance with AISC 360.					
(GIVE DETAILS)					
High-Strength Bolts -Inspection: The certified welding inspector has confirmed and the contractor reported to the District that the materials meet the project specification and that they are properly stored.					
(GIVE DETAILS)					

High-Strength Bolts -Inspection: The certified welding inspector has confirmed that the faying surfaces were properly prepared before the connections were assembled.					
(GIVE DETAILS)					
High-Strength Bolts -Inspection: The certified welding inspector has observed the specified job site testing and calibration, and confirmed that the procedure to be used provided the required tension.					
(GIVE DETAILS)					
High-Strength Bolts -Inspection: The certified welding inspector has monitored the work to ensure the testing procedures were routinely followed on joints that were specified to be fully tensioned.					
(GIVE DETAILS)					
The District has been notified in writing of defective welds, bolts, nuts, and washers within 7 working days of the date of the inspection?					
(GIVE DETAILS)					

SIGNATURE OF INSPECTOR: _____ **DATE:** _____

SIGNATURE OF CQCSM: _____ **DATE:** _____

WELDING INSPECTION CHECKLIST

PROJECT NAME: C-43 WEST BASIN STORAGE RESERVOIR
CONTRACT NUMBER: CN XXXXXXXXX
PACKAGE 4 - CIVIL WORKS

DEFINEABLE FEATURE OF WORK:	**DATE:**
PRIME CONTRACTOR:	**SUPERINTENDENT:**
CQCSM:	**INSPECTOR:**
ACTIVITIES BEING PERFORMED TODAY:	

INSPECTION ITEM	NA	QC REP (INITIALS)	DATE	QA REP (INITIALS)	DATE
Workmanship and techniques for welded construction conform to the requirements of AWS D1.1/D1.1M and AISC 360.					
(GIVE DETAILS)					
The welder has identified all welds by the methods specified in 3.1.2 Identification.					
(GIVE DETAILS)					
Testing has been performed using an approved inspection or testing laboratory or technical consultant.					
(GIVE DETAILS)					
Visual and ultrasonic, magnetic particle, and liquid penetrant dye penetrant inspections have been performed to determine conformance with 3.3 STANDARDS OF ACCEPTANCE of section 05 50 23.16.					
(GIVE DETAILS)					
Procedures and techniques for inspection conform with applicable requirements of AWS D1.1/D1.1M, ASTM E165/E165M, and ASTM E709.					

(GIVE DETAILS)					
STANDARDS OF ACCEPTANCE: Dimensional tolerances for welded construction, details of welds, and quality of welds conform with the applicable requirements of AWS D1.1/D1.1M and the contract drawings.					
(GIVE DETAILS)					
STANDARDS OF ACCEPTANCE: Nondestructive testing has been performed by visual inspection and ultrasonic, magnetic particle, or dye penetrant methods, with the minimum extent of nondestructive testing being random 25 percent of welds or joints, as indicated on the drawings.					
(GIVE DETAILS)					
STANDARDS OF ACCEPTANCE: All records of nondestructive testing have been submitted to the District.					
(GIVE DETAILS)					
Nondestructive Testing: Furnish weldments have been of satisfactory quality.					
(GIVE DETAILS)					
Nondestructive Testing: All records of nondestructive testing have been submitted to the District in accordance with paragraph STANDARDS OF ACCEPTANCE.					
(GIVE DETAILS)					
Destructive Tests: All repairs have been made when metallographic specimens were removed from any part of a structure.					
(GIVE DETAILS)					

Destructive Tests: Proper joints and welding procedures have been used, including peening or heat treatment when required, to develop the full strength of the members and joints cut and to relieve residual stress.					
(GIVE DETAILS)					
CORRECTIONS AND REPAIRS: When inspection or testing indicated defects, in the weld joints, defective welds have been repaired using a qualified welder or welding operator as applicable.					
(GIVE DETAILS)					
CORRECTIONS AND REPAIRS: Corrections have been conducted in accordance with the requirements of AWS D1.1/D1.1M and the specifications.					
(GIVE DETAILS)					
CORRECTIONS AND REPAIRS: All defects have been repaired in accordance with the approved procedures.					
(GIVE DETAILS)					
CORRECTIONS AND REPAIRS: Defects discovered between passes were repaired before additional weld material was deposited.					
(GIVE DETAILS)					
CORRECTIONS AND REPAIRS: Wherever a defect was removed and repair but welding was not required, the affected area has been blended into the surrounding surface to eliminate sharp notches, crevices, or corners.					
(GIVE DETAILS)					
CORRECTIONS AND REPAIRS: After a defect was thought to have been removed, and before re-welding, the area was examined by suitable methods to ensure that the defect has been eliminated.					
(GIVE DETAILS)					

CORRECTIONS AND REPAIRS: The repaired welds have met the inspection requirements for the original welds.		_____	_____	_____	_____
(GIVE DETAILS)					

SIGNATURE OF INSPECTOR: _____ **DATE:** _____

SIGNATURE OF CQCSM: _____ **DATE:** _____

ELECTRICAL INSPECTION CHECKLIST

PROJECT NAME: C-43 WEST BASIN STORAGE RESERVOIR

CONTRACT NUMBER: CN XXXXXXXXX

P3: PS - 470, MICROWAVE TOWER, SR80 BRIDGE IMPROVEMENTS & NORTH TOWNSEND IMPROVEMENTS

DEFINEABLE FEATURE OF WORK:	**DATE:**
PRIME CONTRACTOR:	**SUPERINTENDENT**
CQCSM:	**INSPECTOR:**
ACTIVITIES BEING PERFORMED TODAY:	

INSPECTION ITEM	NA	QC REP (INITALS)	DATE	QAC REP	DATE
the contractor has engaged the services of a District approved qualified testing organization to provide inspection, testing, calibration, and adjustment of the electrical distribution system and generation equipment listed in 3.1 Acceptance Tests and Inspections of section 26 08 00.					
(GIVE DETAILS)					
the contractor has submitted test procedure reports for each item of equipment to be field tested at least 45 days prior to planned testing date and the procedure has been approved by the District.					
(GIVE DETAILS)					
The District has been notified at least 14 days in advance of when tests are conducted by the testing organization.					
(GIVE DETAILS)					
PROPANE FUELED GENERATOR: Functional engine shutdown tests, vibration base-line test, and load bank test have been performed by the equipment supplier.					
(GIVE DETAILS)					

PROPANE FUELED GENERATOR: Following completion of the site work, the representatives of the manufacturer tested the generator and transfer switch for compliance with the specifications.					
(GIVE DETAILS)					
PROPANE FUELED GENERATOR: The manufacturer has conducted on-site installation acceptance tests, including a "cold start" test, a two-hour full load test, and a one step rated load pickup test in accordance with NFPA 110.					
(GIVE DETAILS)					
PROPANE FUELED GENERATOR: The manufacturer has provided a resistive load bank and made temporary connections for full load test.					
(GIVE DETAILS)					
THREE-PHASE PAD-MOUNTED TRANSFORMERS: In accordance with the manufacturer's recommendations and in accordance with NETA ATS, the approved Field Test Procedures and the specifications, the testing organization has performed visual and mechanical inspections on the Pad-Mounted Transformers.					
(GIVE DETAILS)					
THREE-PHASE PAD-MOUNTED TRANSFORMERS: In accordance with the manufacturer's recommendations and in accordance with NETA ATS, the approved Field Test Procedures and the specifications, the testing organization has performed electrical testing on the Pad-Mounted Transformers.					
(GIVE DETAILS)					
THREE-PHASE PAD-MOUNTED TRANSFORMERS: In accordance with the manufacturer's recommendations and in accordance with NETA ATS, the approved Field Test Procedures and the specifications, the testing organization has performed visual and mechanical inspections on the Current Transformers.					
(GIVE DETAILS)					

THREE-PHASE PAD-MOUNTED TRANSFORMERS: In accordance with the manufacturer's recommendations and in accordance with NETA ATS, the approved Field Test Procedures and the specifications, the testing organization has performed electrical testing on the Current Transformers.					
(GIVE DETAILS)					
THREE-PHASE PAD-MOUNTED TRANSFORMERS: In accordance with the manufacturer's recommendations and in accordance with NETA ATS, the approved Field Test Procedures and the specifications, the testing organization has performed visual and mechanical inspections on the Grounding System.					
(GIVE DETAILS)					
THREE-PHASE PAD-MOUNTED TRANSFORMERS: In accordance with the manufacturer's recommendations and in accordance with NETA ATS, the approved Field Test Procedures and the specifications, the testing organization has performed electrical testing on the Grounding System.					
(GIVE DETAILS)					
THREE-PHASE PAD-MOUNTED TRANSFORMERS: In accordance with the manufacturer's recommendations and in accordance with NETA ATS, the approved Field Test Procedures and the specifications, the testing organization has performed visual and mechanical inspections on the Surge Arresters, Medium- and High-Voltage.					
(GIVE DETAILS)					
THREE-PHASE PAD-MOUNTED TRANSFORMERS: In accordance with the manufacturer's recommendations and in accordance with NETA ATS, the approved Field Test Procedures and the specifications, the testing organization has performed electrical testing on the Surge Arresters, Medium- and High-Voltage.					
(GIVE DETAILS)					

THREE-PHASE PAD-MOUNTED TRANSFORMERS: Upon completion of acceptance checks and tests, the contractor demonstrated in service that circuits and devices are in good operating condition and properly performing the intended function and the District was given 5 working days advance notice of the dates and times of checking and testing.					
(GIVE DETAILS)					
UNDERGROUND ELECTRICAL DISTRIBUTION: In accordance with the manufacturer's recommendations and in accordance with NETA ATS, the approved Field Test Procedures and the specifications, the testing organization has performed visual and mechanical inspections on the Medium Voltage Cables.					
(GIVE DETAILS)					
UNDERGROUND ELECTRICAL DISTRIBUTION: In accordance with the manufacturer's recommendations and in accordance with NETA ATS, the approved Field Test Procedures and the specifications, the testing organization has performed electrical testing on the Medium Voltage Cables.					
(GIVE DETAILS)					
UNDERGROUND ELECTRICAL DISTRIBUTION: In accordance with the manufacturer's recommendations and in accordance with NETA ATS, the approved Field Test Procedures and the specifications, the testing organization has performed visual and mechanical inspections on the Low Voltage Cables, 600-Volt.					
(GIVE DETAILS)					
UNDERGROUND ELECTRICAL DISTRIBUTION: In accordance with the manufacturer's recommendations and in accordance with NETA ATS, the approved Field Test Procedures and the specifications, the testing organization has performed electrical testing on the Low Voltage Cables, 600-Volt.					
(GIVE DETAILS)					
UNDERGROUND ELECTRICAL DISTRIBUTION: In accordance with the manufacturer's recommendations and in accordance with NETA ATS, the approved Field Test Procedures and the specifications, has the testing organization performed visual and mechanical inspections on the Grounding System?					

(GIVE DETAILS)					
UNDERGROUND ELECTRICAL DISTRIBUTION: In accordance with the manufacturer's recommendations and in accordance with NETA ATS, the approved Field Test Procedures and the specifications, the testing organization has performed electrical testing on the Grounding System.					
(GIVE DETAILS)					
HIGH VOLTAGE OVERCURRENT PROTECTIVE DEVICES: The control and protective devices, that are not factory installed, have been demonstrated to operate as indicated and set per the approved system study.					
(GIVE DETAILS)					
HIGH VOLTAGE OVERCURRENT PROTECTIVE DEVICES: The high-voltage circuit breakers and their bushings have been given an insulation power factor test to establish condition monitoring baselines.					
(GIVE DETAILS)					
LOW VOLTAGE OVERCURRENT PROTECTIVE DEVICES: The operations and controls of protective devices of non-factory installed equipment have been demonstrated.					
(GIVE DETAILS)					
LOW VOLTAGE OVERCURRENT PROTECTIVE DEVICES: Tap settings of instrumentation, potential, and current transformers have been verified.					
(GIVE DETAILS)					
LOW VOLTAGE OVERCURRENT PROTECTIVE DEVICES: Before breakers are energized, the dielectric tests have been performed on insulating oil in oil circuit in accordance with ASTM D877, and have provided breakdown voltage that is not less than 25,000 volts.					
(GIVE DETAILS)					

LOW VOLTAGE OVERCURRENT PROTECTIVE DEVICES: The District has been provided the manufacturer certification that the oil contains no PCB's and a label has been affixed to that effect on each breaker tank and on each oil drum containing the insulating oil.					
(GIVE DETAILS)					
LOW VOLTAGE OVERCURRENT PROTECTIVE DEVICES: Reduced-voltage starting devices have been field adjusted to obtain optimum operating conditions.					
(GIVE DETAILS)					
LOW VOLTAGE OVERCURRENT PROTECTIVE DEVICES: Test meters and instrument transformers have been provided that conform to ANSI C12.1 and IEEE C57.13.					
(GIVE DETAILS)					
LOW-VOLTAGE MOTORS -Electrical Tests: Continuity tests have been performed on all phases.					
(GIVE DETAILS)					
LOW-VOLTAGE MOTORS -Electrical Tests: Insulation resistance and polarization index test have been performed on each phase of motor.					
(GIVE DETAILS)					
LOW-VOLTAGE MOTORS -Electrical Tests: Insulation tests have been conducted on 480 volt and 600-volt motors using a 1000-volt insulation test set.					
(GIVE DETAILS)					
LOW-VOLTAGE MOTORS -Electrical Tests: Inspections and test procedures have been performed on all motors in accordance with NETA ATS and NETA MTS 7.15.1 for rotating machinery, AC motors.					
(GIVE DETAILS)					
LOW-VOLTAGE MOTORS -Electrical Tests: The polarization index has been calculated of each phase by dividing the 10 minute reading by the 1 minute reading. The polarization index being less than 1.25 has been verified. (Reject any lower values and return the motor to the factory.)					

(GIVE DETAILS)					
LOW-VOLTAGE MOTORS -Vibration Tests: To measure vibration levels, a Fast Fourier Transformer (FFT) analyzer having the characteristics specified in 3.2.2.1 Vibration Analyzer of section 26 60 13.00 40 has been used.					
(GIVE DETAILS)					
LOW-VOLTAGE MOTORS -Vibration Tests: An accelerometer, either stud-mounted or mounted using a rare earth, low mass magnet and sound disk (or finished surface) has been used with the FFT analyzer to collect data.					
(GIVE DETAILS)					
LOW-VOLTAGE MOTORS -Vibration Tests: Vibration data has been collected in the axial, vertical, and horizontal direction for each motor bearing.					
(GIVE DETAILS)					
LOW-VOLTAGE MOTORS -Vibration Tests: Two narrowband spectra for each data collection point has been obtained as specified in 3.2.2.2 Vibration Data of section 26 60 13.00 40.					
(GIVE DETAILS)					
LOW-VOLTAGE MOTORS -Vibration Tests: The contractor has provided final test reports to the District in accordance with 3.2.2.2 Vibration Data of section 26 60 13.00 40.					
(GIVE DETAILS)					
HIGH VOLTAGE OVERCURRENT PROTECTIVE DEVICES: The control and protective devices that are not factory installed have been demonstrated to operate as indicated and set per the approved system study.					
(GIVE DETAILS)					
HIGH VOLTAGE OVERCURRENT PROTECTIVE DEVICES: High-voltage circuit breakers and their bushings have been given an insulation power factor test to establish condition monitoring baselines.					

(GIVE DETAILS)					
HIGH VOLTAGE OVERCURRENT PROTECTIVE DEVICES: The contractor has submitted final test reports with a cover sheet clearly marked with the System name, Date, and the words "Final Test Reports".					
(GIVE DETAILS)					
FOLLOW UP VARIFICATION: Upon completion of acceptance checks and tests, the Contractor has shown, by demonstration in service, that circuits and devices are in good operating condition and properly performing the intended function. As an exception to requirements stated elsewhere in the contract, the Construction Manager has be given 5 working days advance notice of the dates and times of checking and testing.					
(GIVE DETAILS)					

SIGNATURE OF INSPECTOR: _____ **DATE:** _____

SIGNATURE OF CQCSM: _____ **DATE:** _____

DFOW INSPECTION REPORT

PROJECT NAME: C-43 WEST BASIN STORAGE RESERVOIR
CONTRACT NUMBER: CN XXXXXXXXX
PACKAGE 4 - CIVIL WORKS

DEFINEABLE FEATURE OF WORK:	DEMOLITION		
PRIME CONTRACTOR:		**DATE:**	
PRIME CONTRACTOR SUPERVISOR:			
QUALITY CONTROL SYSTEMS MANAGER:			
QC SPECIALIST:			
SUBCONTRACTOR:			
ACTIVITY:			
ACTIVITY LOCATION:			
ACTIVITY SPECIFICATIONS:	02 41 00		

1	PRE-CONSTRUCTION INSPECTIONS	NA	QC REP (INITIALS	DATE	QC REP (INITIALS	DATE
1.1	Have the DFOW specifications and drawings been reviewed with the understanding of specified requirements?					
1.2	Have the CQCP and AHA been reviewed with the comprehension and awareness of their Requirements?					
1.3	Have all pre-construction submittals and work plans been approved for this DFOW by the District?					
1.4	Have all RFIs been answered, reviewed and understood by the appropriate CQC Staff, Superintendant and required subcontractor?					
1.5	Has previous work been completed to enable this DFOW to begin without covering up non-compliance work?					
1.6	Has any and all preliminary work been completed in order to begin work for this DFOW?					
1.7	Have all as-builts been recorded from previous DFOW?					
1.8	Materials: Do all materials and equipment conform to the specification?					
1.9	Have all materials and equipment been handled and stored in accordance with the project specifications and the manufacturer's recommendations of requirements?					
1.10	Has the contractor received all required written approvals by the District to begin work for this DFOW?					
1.11	Has the Preparatory Control Phase Inspection been performed and properly documented for this DFOW?					

IF ANY OF THE ABOVE REQUIREMENTS WERE MARKED NO, EXPLAIN:

2	CONSTRUCTION INSPECTIONS	NA	QC REP (INITIALS	DATE	QC REP (INITIALS	DATE
2.1	Has the Initial Control Phase Inspection been performed for this DFOW?					
2.2	Are the DQCRs and Daily Safety Reports current and complete with the correct information documenting this DFOW?					
2.3	Has the contractor inspected and evaluated existing structures onsite for reuse?					
2.4	Has the contractor adhered to section 02 41 00, 3.1 for the dimantling, storage and delivering of structures to be reused?					
2.5	Has the contractor removed and/or demolished existing structures, indicted to be removed, in accordance with section 02 41 00, 3.1.1?					
2.6	Has the contractor removed existing utilities in accordance with section 02 41 00, 3.1.2?					
2.7	Has the contractor removed chain link fences, gates in accordance with 02 41 00, 3.1.3?					
2.8	Has the contractor removed paving and slabs in accordance with section 02 41 00, 3.1.4?					
2.9	Has the contractor dismantled structural steel in accordance with 02 41 00, 3.1.5?					
2.10	Has the contractor recycled scrap metal, providing separate waste containers to collect the scrap metal and transported to a scrap metal collection or recycling facility, in accordance with the Waste Management Plan?					
2.11	Has the contractor removed irrigation pumps, pump motors, motor controllers, and operating and control equipment that are attached to the driven equipment? Has the contractor salvaged wiring systems and components?					
2.12	Has the contractor removed electrical devices in accordance with section 02 41 00, 3.1.8?					
2.13	Has the removed wiring ducts or troughs and dismantled plug-in ducts and wiring troughs into unit lengths?					
2.14	Has the contractor removed and disposed of items with unique or regulated disposal requirements in the manner dictated by law or in the most environmentally responsible manner?					
2.15	Has the contractor completed all demolition and debris removal in the areas before beginning excavation, filling or other earth-moving operations that are sequential to demolition work in areas occupied by structures to be demolished?					
2.16	Has the disposition of materials adhered to specification 02 41 00, 3.3?					
2.17	Has the contractor removed and transported the debris in a manner that prevents spillage on streets or adjacent areas and conforms to local regulations regarding hauling and disposal?					
2.18	Has the contractor disposed of removed material in accordance with section 02 41 00, 3.5?					
2.19	Preload Soil Material - Has the contractor removed the material down to the prepared foundation level and placed in the location designated as a Stockpile area?					
2.20	Piezometers - Has the contractor removed all cable and conduit to 3 feet below the prepared foundation level? (The remainder of the grouted conduit can remain in place.)					

2.21	Inclinometers - Has the contractor removed the casing from the top of the preload mound to 3 feet below the prepared foundation level? (Fill the remaining casing with grout.)					
2.22	Settlement Plates - Has the contractor remove all settlement plate components down to the prepared foundation level?					
2.23	Data Logger Stations - Has the contractor removed all equipment, conduit and cables and the existing bollards associated with the data logger stations?					

IF ANY OF THE ABOVE REQUIREMENTS WERE MARKED NO, EXPLAIN:

3	POST-CONSTRUCTION INSPECTIONS	NA	QC REP (INITIALS	DATE	QC REP (INITIALS	DATE
3.1	Has the Final Punch List been completed and provided to the District for this DFOW?					
3.2	Has the Pre-Final Punch List been completed and submitted for this DFOW?					
3.3	Has the Final Follow-up Control Phase Inspection been performed for this DFOW?					
3.4	Has the Final Acceptance Inspection been performed for this DFOW?					
3.5	Have all asbuilts been recorded for this DFOW?					
3.6	WARRANTY: Has the warranty met the requirements specified in Section 01 61 03 EQUIPMENT AND MATERIALS?					

IF ANY OF THE ABOVE REQUIREMENTS WERE MARKED NO, EXPLAIN:

CONTRACTOR'S QC REPRESENTATIVE'S SIGNATURE	DATE	DISTRICT'S QA REPRESENTATIVE'S SIGNATURE	DATE

DFOW INSPECTION REPORT

PROJECT NAME: C-43 WEST BASIN STORAGE RESERVOIR
CONTRACT NUMBER: CN XXXXXXXXX
PACKAGE 4 - CIVIL WORKS

DEFINEABLE FEATURE OF WORK:	**ENVIRONMENTAL PROTECTION**		
PRIME CONTRACTOR:		**DATE:**	
PRIME CONTRACTOR SUPERVISOR:			
QUALITY CONTROL SYSTEMS MANAGER:			
QC SPECIALIST:			
SUBCONTRACTOR:			
ACTIVITY:			
ACTIVITY LOCATION:			
ACTIVITY SPECIFICATIONS:	**01 35 44, 01 56 05, 33 03 00 & 33 03 01**		

1	PRE-CONSTRUCTION INSPECTIONS	NA	QC REP (INITIALS	DATE	QC REP (INITIALS	DATE
1.1	Have the DFOW specifications and drawings been reviewed with the understanding of specified requirements?					
1.2	Have the CQCP and AHA been reviewed with the comprehension and awareness of their Requirements?					
1.3	Have all pre-construction submittals and work plans been approved for this DFOW by the District?					
1.4	Have all RFIs been answered, reviewed and understood by the appropriate CQC Staff, Superintendant and required subcontractor?					
1.5	Has previous work been completed to enable this DFOW to begin without covering up non-compliance work?					
1.6	Has any and all preliminary work been completed in order to begin work for this DFOW?					
1.7	Have all as-builts been recorded from previous DFOW?					
1.8	Materials: Do all materials and equipment conform to the specification?					
1.9	Have all materials and equipment been handled and stored in accordance with the project specifications and the manufacturer's recommendations of requirements?					
1.10	Has the contractor received all required written approvals by the District to begin work for this DFOW?					
1.11	Prior to the onset of construction activities, has the contractor and all personnel been trained on how to identify and implement the Standard Protection Measures and Guidelines for the Threatened and Endangered Species and ground-nesting birds?					

1.12	Has the contractor trained its personnel in relevant phases of environmental protection that include methods of detecting and avoiding pollution, familiarization with pollution standards, and careful installation and monitoring of the project to ensure continuous environmental pollution control?						
1.13	Does the contractor have at least one (1) employee, on-site, certified by the Florida Department of Environmental Protection as a Stormwater Erosion and Sedimentation Control Inspector? Have the inspector qualifications been submitted to the District for review prior to the installation, inspection, maintenance, repair, or replacement of any erosion or sedimentation control Best Management Practices, including but not limited to the turbidity controls? (The turbidity monitoring shall be conducted according to the FDEP approved procedures.)						
1.14	Has the Preparatory Control Phase Inspection been performed and properly documented for this DFOW?						

IF ANY OF THE ABOVE REQUIREMENTS WERE MARKED NO, EXPLAIN:

2	CONSTRUCTION INSPECTIONS	NA	QC REP (INITIALS	DATE	QC REP (INITIALS	DATE
2.1	Has the Initial Control Phase Inspection been performed for this DFOW?					
2.2	Are the DQCRs and Daily Safety Reports current and complete with the correct information documenting this DFOW?					
2.3	The turbidity controls shall be inspected by the Contractor every work day, after every rainfall event of 0.5 inches or greater in a 24-hour period, and after every extreme weather event that could dislodge or damage the turbidity controls. SEE Specifications					
2.4	The Contractor shall conduct and record the results of turbidity monitoring appropriate to the conditions and at the locations, times, and frequencies specified below. An FDEP approved Turbidity Monitoring Log is attached (Appendix A) for the Contractor's use.					
2.5	At least 100 feet (or as specified in the applicable environmental permit) upstream of any construction activities that may generate turbidity within a canal or conveyance feature outside the construction area, in the middle of the canal, at mid-depth in the water column, and outside of any visible turbidity plume.					
2.6	Located in the canal or water body adjacent to each Work area, downstream or radial to the construction or maintenance work area, directly outside of the turbidity barriers, and within the densest portion of any visible plume.					
2.7	Water samples for the turbidity measurement shall be collected beginning no sooner than one (1) hour after and no later than two (2) hours after construction activity commences (or as specified in the applicable environmental permit) and every four (4) hours thereafter until the work day ends.					

2.8	Water samples shall be collected at the same time(s) every work day according to this schedule. Any substantial deviation from this schedule must be approved by the District, unless otherwise compelled by force majeure, in which case, an explanation must be provided verbally as soon as possible and in writing within 48 hours of the deviation.						
2.9	Water samples shall be collected at the same time(s) every work day according to this schedule. Any substantial deviation from this schedule must be approved by the District, unless otherwise compelled by force majeure, in which case, an explanation must be provided verbally as soon as possible and in writing within 48 hours of the deviation.						
2.10	During Activities and Conditions That Cannot Generate Construction- Related Turbidity: Once daily at 10:00 AM or as specified in the applicable environmental permit.						
2.11	The individual conducting the turbidity monitoring shall transcribe the readings to the approved Daily Turbidity Monitoring Log form (Appendix A) and sign and date the form at the close of each monitoring day. The notebook containing the signed and dated daily turbidity monitoring log forms shall be accessible at the construction Site during the work day.						
2.12	The Contractor shall submit the quarterly monitoring data (Turbidity Monitoring Log forms), to the District. Documents submitted shall contain the specified information.						
2.13	If at any time, monitoring reveals the turbidity level, at the compliance sampling station is greater than 29 NTUs above the corresponding background sample in Class I or III receiving waters or greater than 0 NTU above background samples in receiving waters classified as OFW (Outstanding Florida Waters), construction activities shall cease immediately.						
2.14	The Contractor must notify the District and the District's Permitting and Compliance Staff immediately who then, per the permit, must notify the permitting agency of the exceedance.						
2.15	Has the contractor conducted and recorded the results of turbidity monitoring appropriate to the conditions and at the locations, times, and frequencies specified in section 33 03 00.3.2?						
2.16	The Contractor shall submit a written spill event report to the District and to the State of Florida Bureau of Emergency Response providing certification of commitment of manpower, equipment and materials necessary to prevent the spread and effect expeditious cleanup and disposal.						
2.17	For sanitary waste management, the Contractor shall ensure that portable restrooms will be anchored on level ground with at least a 15-foot set-back from water bodies or banks or slopes thereto.						
2.18	The Contractor shall ensure toxic substances and hazardous materials are stored in a locked, blast-resistant shed anchored to a bermed concrete or asphalt pad on level ground with at least a 15-foot setback from any water bodies, conveyances thereto, or banks or slopes thereto.						

2.19	The Contractor shall provide and install manatee signs. Refer to Attachment B. Provide manatee sign shop drawings for review and approval.					
2.20	The Contractor shall provide and install a temporary manatee barrier. The temporary barrier shall be like the suggested design and function as the barrier presented in Attachment C. Provide manatee barrier shop drawings for review and approval.					
2.21	Warning signs telling boaters of the construction work shall be placed at the mouth of the Townsend Canal at the Caloosahatchee River as specified					
2.17	Have all physical, chemical, and biological measurements and analyses that are necessary to comply with the monitoring requirements in all applicable permits or in this Contract been performed according to approved methods and procedures by a commercial laboratory that is certified to perform the required analyses according to the approved methods and procedures by the National Environmental Laboratory Accreditation Conference (NELAC)?					

IF ANY OF THE ABOVE REQUIREMENTS WERE MARKED NO, EXPLAIN:

3	POST-CONSTRUCTION INSPECTIONS	NA	QC REP (INITIALS	DATE	QC REP (INITIALS	DATE
3.1	Has the Final Punch List been completed and provided to the District for this DFOW?					
3.2	Has the Pre-Final Punch List been completed and submitted for this DFOW?					
3.3	Has the Final Follow-up Control Phase Inspection been performed for this DFOW?					
3.4	Has the Final Acceptance Inspection been performed for this DFOW?					
3.5	Have all asbuilts been recorded for this DFOW?					
3.6	WARRANTY: Has the warranty met the requirements specified in Section 01 61 03 EQUIPMENT AND MATERIALS?					

IF ANY OF THE ABOVE REQUIREMENTS WERE MARKED NO, EXPLAIN:

CONTRACTOR'S QC REPRESENTATIVE'S SIGNATURE	DATE	DISTRICT'S QA REPRESENTATIVE'S SIGNATURE	DATE

DFOW INSPECTION REPORT

PROJECT NAME: C-43 WEST BASIN STORAGE RESERVOIR
CONTRACT NUMBER: CN XXXXXXXXX
PACKAGE 4 - CIVIL WORKS

DEFINEABLE FEATURE OF WORK:	EROSION AND SEDIMENT CONTROL		
PRIME CONTRACTOR:		**DATE:**	
PRIME CONTRACTOR SUPERVISOR:			
QUALITY CONTROL SYSTEMS MANAGER:			
QC SPECIALIST:			
SUBCONTRACTOR:			
ACTIVITY:			
ACTIVITY LOCATION:			
ACTIVITY SPECIFICATIONS:	31 32 11		

1	PRE-CONSTRUCTION INSPECTIONS	NA	QC REP (INITIALS	DATE	QC REP (INITIALS	DATE
1.1	Have the DFOW specifications and drawings been reviewed with the understanding of specified requirements?					
1.2	Have the CQCP and AHA been reviewed with the comprehension and awareness of their Requirements?					
1.3	Have all pre-construction submittals and work plans been approved for this DFOW by the District?					
1.4	Have all RFIs been answered, reviewed and understood by the appropriate CQC Staff, Superintendant and required subcontractor?					
1.5	Has previous work been completed to enable this DFOW to begin without covering up non-compliance work?					
1.6	Has any and all preliminary work been completed in order to begin work for this DFOW?					
1.7	Have all as-builts been recorded from previous DFOW?					
1.8	Materials: Do all materials and equipment conform to the specification?					
1.9	Have all materials and equipment been handled and stored in accordance with the project specifications and the manufacturer's recommendations of requirements?					
1.10	Has the contractor received all required written approvals by the District to begin work for this DFOW?					
1.11	Installer's Qualification- Is the installer certified by the manufacturer for training and experienced installing the material?					
1.12	Submit scale drawings of an erosion control measures layout that defines areas to receive recommended materials as required by federal, state or local regulations.					

1.13	When obstructions below ground affect the work, submit shop drawings showing proposed adjustments to placement of erosion control material for approval.						
1.14	Submit shop drawings of the proposed sediment or settling ponds including the pond location, the routing of the runoff into and out of the pond and the point(s) of discharge from the ponds.						
1.15	Has the Preparatory Control Phase Inspection been performed and properly documented for this DFOW?						

IF ANY OF THE ABOVE REQUIREMENTS WERE MARKED NO, EXPLAIN:

2	CONSTRUCTION INSPECTIONS	NA	QC REP (INITIALS	DATE	QC REP (INITIALS	DATE
2.1	Has the Initial Control Phase Inspection been performed for this DFOW?					
2.2	Substitutions- If any, have any and all substitutions been written requested by the contractor and approved by the District?					
2.3	Have all materials and equipment been handled and stored in accordance with the project specifications and the manufacturer's recommendations of requirements?					
2.4	Have the monthly permanently stabilized area inspections been performed, documented in reports and reported to the District?					
2.5	Has the contractor performed erosion and control measures that adhere to the contractor's Erosion Control Site Plan and the specifications and drawings??					
2.6	Silt Fencing -Has the silt fence been installed in the area designated on the drawings?					
2.7	Silt Fencing -Has the contractor properly installed all of the silt fencing by excavating a 6"x 6" trench, embedding the system's posts 18" minimum into the trench next to the wall (a minimum of 2' shall remain above natural ground), with 6" of the fabric (should be marked) into the trench with the fabric facing the trench? Is the silt fence fabric forming an "L" shape against the wall and bottom of the trench? Is the trench properly backfilled and compacted over the fabric and tight against the posts as indicated in the drawings?					
2.8	Silt Fencing -Are all the post spacings in compliance with the drawings, dependent on "Type 3" or "Type 4" silt fencing? Are splicing of silt fencing in accordance with the "splice detail" drawing?					
2.9	Silt Fencing -Are the silt fences being monitored for damages and being repaired or replaced as needed?					
2.10	Has the contractor provided the certification of the State-certified native seed mix of the latest season's crop in original sealed packages bearing the producer's guaranteed analysis for percentages of mixture, purity, germination, hard seed, weed seed content, and inert material?					
2.11	Has the contractor verified weed seed is less than 1 percent by weight of the total mixture?					

2.12	SATISFACTORY STAND OF GRASS PLANTS- Has the contractor evaluated the grass plants for species and health when the grass plants are a minimum 1 inch high and that no bare areas is comprising more than 1 percent of any given 1,000 square foot area? (The total bare spots must not exceed 2 percent of the total vegetation area.)					
2.13	MAINTENANCE RECORD- Has the contractor submitted a maintenance record describing the maintenance work performed, record of measurements and findings for product failure, recommendations for repair, and products replaced?					

IF ANY OF THE ABOVE REQUIREMENTS WERE MARKED NO, EXPLAIN:

3	POST-CONSTRUCTION INSPECTIONS	NA	QC REP (INITIALS	DATE	QC REP (INITIALS	DATE
3.1	Has the Final Punch List been completed and provided to the District for this DFOW?					
3.2	Has the Pre-Final Punch List been completed and submitted for this DFOW?					
3.3	Has the Final Follow-up Control Phase Inspection been performed for this DFOW?					
3.4	Has the Final Acceptance Inspection been performed for this DFOW?					
3.5	Have all asbuilts been recorded for this DFOW?					
3.6	WARRANTY: Has the warranty met the requirements specified in Section 01 61 03 EQUIPMENT AND MATERIALS?					

IF ANY OF THE ABOVE REQUIREMENTS WERE MARKED NO, EXPLAIN:

CONTRACTOR'S QC REPRESENTATIVE'S SIGNATURE	DATE	DISTRICT'S QA REPRESENTATIVE'S SIGNATURE	DATE

DFOW INSPECTION REPORT

PROJECT NAME: C-43 WEST BASIN STORAGE RESERVOIR
CONTRACT NUMBER: CN XXXXXXXXX
PACKAGE 4 - CIVIL WORKS

DEFINEABLE FEATURE OF WORK:	DISTRICT CONSTRUCTION COMPOUND		
PRIME CONTRACTOR:		**DATE:**	
PRIME CONTRACTOR SUPERVISOR:			
QUALITY CONTROL SYSTEMS MANAGER:			
QC SPECIALIST:			
SUBCONTRACTOR:			
ACTIVITY:			
ACTIVITY LOCATION:			
ACTIVITY SPECIFICATIONS:	01 51 05 & 01 52 13		

1	PRE-CONSTRUCTION INSPECTIONS	NA	QC REP (INITIALS	DATE	QC REP (INITIALS	DATE
1.1	Have the DFOW specifications and drawings been reviewed with the understanding of specified requirements?					
1.2	Have the CQCP and AHA been reviewed with the comprehension and awareness of their Requirements?					
1.3	Have all pre-construction submittals and work plans been approved for this DFOW by the District?					
1.4	Have all RFIs been answered, reviewed and understood by the appropriate CQC Staff, Superintendant and required subcontractor?					
1.5	Has previous work been completed to enable this DFOW to begin without covering up non-compliance work?					
1.6	Has any and all preliminary work been completed in order to begin work for this DFOW?					
1.7	Have all as-builts been recorded from previous DFOW?					
1.8	Materials: Do all materials and equipment conform to the specification?					
1.9	Have all materials and equipment been handled and stored in accordance with the project specifications and the manufacturer's recommendations of requirements?					
1.10	Has the contractor received all required written approvals by the District to begin work for this DFOW?					
1.11	Have all regulations been complied with according to Section 01 51 05?					
1.12	Has the Preparatory Control Phase Inspection been performed and properly documented for this DFOW?					

IF ANY OF THE ABOVE REQUIREMENTS WERE MARKED NO, EXPLAIN:

2	CONSTRUCTION INSPECTIONS	NA	QC REP (INITIALS	DATE	QC REP (INITIALS	DATE
2.1	Has the Initial Control Phase Inspection been performed for this DFOW?					
2.2	Are the DQCRs and Daily Safety Reports current and complete with the correct information documenting this DFOW?					
2.3	Are the temporary utilities being installed in accordance to the specifications and the detailed drawings?					
2.4	Have each of the temporary utilities been properly inspected and tested before placing in use by the governing authorities?					
2.5	Has the contractor been responsible for all cost of maintaining all of the District's offices and the existing field laboratory for the life of the contract?					
2.6	Has the contractor modified, relocated and extended systems as the work progressed?					
2.7	Has the contractor received the Certificate of Occupancy?					
2.8	Has the contractor furnished any required trailers in accordance to the specifications?					
2.9	At the completion of the project, has the contractor performed all demobilzation activities in accordance with specification 01 52 13, 3.7?					

IF ANY OF THE ABOVE REQUIREMENTS WERE MARKED NO, EXPLAIN:

3	POST-CONSTRUCTION INSPECTIONS	NA	QC REP (INITIALS	DATE	QC REP (INITIALS	DATE
3.1	Has the Final Punch List been completed and provided to the District for this DFOW?					
3.2	Has the Pre-Final Punch List been completed and submitted for this DFOW?					
3.3	Has the Final Follow-up Control Phase Inspection been performed for this DFOW?					

3.4	Has the Final Acceptance Inspection been performed for this DFOW?						
3.5	Are all Certificates of Occupancy permits in place by local authorities?						
3.6	Have all asbuilts been recorded for this DFOW?						
3.7	WARRANTY: Has the warranty met the requirements specified in Section 01 61 03 EQUIPMENT AND MATERIALS?						

IF ANY OF THE ABOVE REQUIREMENTS WERE MARKED NO, EXPLAIN:

CONTRACTOR'S QC REPRESENTATIVE'S SIGNATURE	DATE	DISTRICT'S QA REPRESENTATIVE'S SIGNATURE	DATE

DFOW INSPECTION REPORT

PROJECT NAME: C-43 WEST BASIN STORAGE RESERVOIR
CONTRACT NUMBER: CN XXXXXXXXX
PACKAGE 4 - CIVIL WORKS

DEFINEABLE FEATURE OF WORK:	LAYOUT		
PRIME CONTRACTOR:		**DATE:**	
PRIME CONTRACTOR SUPERVISOR:			
QUALITY CONTROL SYSTEMS MANAGER:			
QC SPECIALIST:	FLORIDA LICENSED PROFESSIONAL SURVEYOR AND MAPPER:		
SUBCONTRACTOR:			
ACTIVITY:			
ACTIVITY LOCATION:			
ACTIVITY SPECIFICATIONS:	01 71 23		

1	PRE-CONSTRUCTION INSPECTIONS	NA	QC REP (INITIALS	DATE	QC REP (INITIALS	DATE
1.1	Have the DFOW specifications and drawings been reviewed with the understanding of specified requirements?					
1.2	Have the CQCP and AHA been reviewed with the comprehension and awareness of their Requirements?					
1.3	Have all pre-construction submittals and work plans been approved for this DFOW by the District?					
1.4	Have all RFIs been answered, reviewed and understood by the appropriate CQC Staff, Superintendant and required subcontractor?					
1.5	Has previous work been completed to enable this DFOW to begin without covering up non-compliance work?					
1.6	Has any and all preliminary work been completed in order to begin work for this DFOW?					
1.7	Have all as-builts been recorded from previous DFOW?					
1.8	Materials: Do all materials and equipment conform to the specification?					
1.9	Have all materials and equipment been handled and stored in accordance with the project specifications and the manufacturer's recommendations of requirements?					
1.10	Has the contractor received all required written approvals by the District to begin work for this DFOW?					
1.11	Has the contractor engagedin a Florida licensed Professional Surveyor and Mapper in accordance with section 01 71 23?					
1.12	Has the Preparatory Control Phase Inspection been performed and properly documented for this DFOW?					

IF ANY OF THE ABOVE REQUIREMENTS WERE MARKED NO, EXPLAIN:

2	CONSTRUCTION INSPECTIONS	NA	QC REP (INITIALS	DATE	QC REP (INITIALS	DATE
2.1	Has the Initial Control Phase Inspection been performed for this DFOW?					
2.2	Are the DQCRs and Daily Safety Reports current and complete with the correct information documenting this DFOW?					
2.3	Has the contractor performed all construction layout survey tasks as necessary for construction and satisfactory completion of the Work?					
2.4	Has the contractor verified benchmark elevations by running a level loop between a minimum of two (2) Project vertical control points prior to the construction layout survey or establishing Project elevation data and/or new benchmarks where necessary?					
2.5	Has the contractor completed all leveling under the supervision of a Florida licensed Professional Surveyor and Mapper? (The level run shall close to within 0.03 feet times the square root of the distance in miles.)					
2.6	Has the contractor performeding at a minimum two (2) daily check measurements with RTK Global Positioning System (GPS) on a minimum of two (2) different Project control monuments in two (2) different satellite geometric layouts?					
2.7	Has the contractor performed a peg test as necessary on all level equipment with needed adjustments to maintain the accuracy of the instruments?					
2.8	Has the contractor's surveyor kept a record of all survey work in a survey field book in a clear, orderly, and neat manner consistent with standard surveying practices? Has a copy of the survey book been sent to the District on a daily basis?					

IF ANY OF THE ABOVE REQUIREMENTS WERE MARKED NO, EXPLAIN:

3	POST-CONSTRUCTION INSPECTIONS	NA	QC REP (INITIALS	DATE	QC REP (INITIALS	DATE
3.1	Has the Final Punch List been completed and provided to the District for this DFOW?					
3.2	Has the Pre-Final Punch List been completed and submitted for this DFOW?					
3.3	Has the Final Follow-up Control Phase Inspection been performed for this DFOW?					
3.4	Has the Final Acceptance Inspection been performed for this DFOW?					
3.5	Have all asbuilts been recorded for this DFOW?					
3.6	Have all close-out submittals been accepted and approved by the District?					
3.7	WARRANTY: Has the warranty met the requirements specified in Section 01 61 03 EQUIPMENT AND MATERIALS?					

IF ANY OF THE ABOVE REQUIREMENTS WERE MARKED NO, EXPLAIN:

CONTRACTOR'S QC REPRESENTATIVE'S SIGNATURE	DATE	DISTRICT'S QA REPRESENTATIVE'S SIGNATURE	DATE

DFOW INSPECTION REPORT

PROJECT NAME: C-43 WEST BASIN STORAGE RESERVOIR
CONTRACT NUMBER: CN XXXXXXXXX
PACKAGE 4 - CIVIL WORKS

DEFINEABLE FEATURE OF WORK:	CLEARING AND GRUBBING		
PRIME CONTRACTOR:		**DATE:**	
PRIME CONTRACTOR SUPERVISOR:			
QUALITY CONTROL SYSTEMS MANAGER:			
QC SPECIALIST:			
SUBCONTRACTOR:			
ACTIVITY:			
ACTIVITY LOCATION:			
ACTIVITY SPECIFICATIONS:	31 11 00		

SIGN AND DATE APPROPRIATELY IF THE INSPECTIONS HAVE BEEN SATISFIED FOR THE DFOW

1	PRE-CONSTRUCTION INSPECTIONS	NA	QC REP (INITIALS	DATE	QC REP (INITIALS	DATE
1.1	Have the DFOW Specifications been Reviewed with the Understanding of Specified Requirements?					
1.2	Have the Project Drawings for this DFOW been Reviewed with Issues or Concerns by the Contractor resolved?					
1.3	Has the Quality Control Plan been Reviewed with the Comprehension of it's Requirements?					
1.4	Has the Activity Hazard Analysis been Reviewed with the Awareness of it's Requirements?					
1.5	Have all Pre-Construction Submittals been Approved for this DFOW by the District?					
1.6	Have all RFIs been Answered, Reviewed and Understood by the Contractor's Management team?					
1.7	Have all Construction Work Plans been Approved for this DFOW by the District?					
1.8	Has the Preparatory Control Phase Inspection been Performed and Properly Documented for this DFOW?					
1.9	Has Previous Work Been Completed to enable this DFOW to Begin Without Covering up Non-compliance Work?					
1.10	Have all As-builts been Recorded from Previous DFOW?					
1.11	Has Any and All Preliminary Work been Completed in Order to begin Work for this DFOW? (Utility Locators)					
1.12	For work within FPL easements, has the Contractor coordinated with the FPL that equipment and procedures for the work are approved by FPL?					
1.12	Has the contractor received all required Written Approvals by the District to begin work for this DFOW?					

IF ANY OF THE ABOVE REQUIREMENTS WERE MARKED NO, EXPLAIN:

2	CONSTRUCTION INSPECTIONS	NA	QC REP (INITIALS	DATE	QC REP (INITIALS	DATE
2.1	Has the Initial Control Phase Inspection been performed for this DFOW?					
2.2	Have the Daily Follow-up Control Phase Inspections been Performed and Recorded on the DQCR for this DFOW?					
2.3	Is the DQCR Current and Complete with the Correct Information Documenting this DFOW?					
2.4	Is the Daily Site Safety Report Current and Complete with the Correct Information Documenting this DFOW?					
2.5	Have all Deficiencies/Non-conformances been Corrected and Documented related to this DFOW?					
2.6	Has the contractor conducted its operations and the removal of cleared materials to ensure minimum interference with existing roads and other adjacent occupied or used facilities?					
2.7	Are paved roads staying free of dirt and debris at all times?					
2.8	Is the contractor avoiding blocking or otherwise obstructing access roads or other occupied or used facilities?					
2.9	Where blocked roads or allowed by the District, has the contractor provided safe alternative routes around closed or obstructed traffic ways?					
2.10	Are trees and vegetation to be left standing protected from damage incident to clearing, grubbing and construction operations by erecting barriers or by such other means as the circumstances require?					
2.11	Are existing utility lines that are indicated to remain protected from damage? (Notify the District immediately of any damage to or an encounter with an unknown existing utility line.)					
2.12	Are clearing, grubbing and topsoil stripping (nominal depth of 8") within the limits of excavation, fills and borrow areas?					
2.13	Are all canals and ditches within areas that are to receive fill, being dewatered, cleared, grubbed, and stripped of topsoil, vegetative matter and associated root systems? Are these areas being over-excavated as shown on the drawings?					
2.14	Are the side slopes of the canals and ditches being graded to the slope as shown on the drawings?					
2.15	Are land preparations proceeding sufficiently ahead of earthwork activities to minimize disruption and to allow time for determination of the adequacy of the procedure?					

2.16	Are the felling of trees, trimming and cutting of trees into sections and the satisfactory disposal of the trees and other vegetation designated for removal, including downed timber, snags, brush and rubbish occurring within the areas to be cleared being performed properly?					
2.17	Are structures that obtrude, encroach upon or otherwise obstruct the work being removed and disposed of?					
2.18	Except such trees and vegetation as may be indicated or directed to be left standing, are trees, stumps, roots, brush and other vegetation in areas to be cleared cut off flush with or below the original ground surface?					
2.19	Are all irrigation pipe and drainage pipe and other man-made and unsuitable materials encountered removed from the footprints of the proposed embankments and borrow areas? (These items shall be witnessed by the District and recorded by the contractor on DQCRs.)					
2.20	Are all woody debris that measures over 1/2' in diameter removed?					
2.21	If the contractor burns woody vegetation onsite from clearing and grubbing, has the contractor received written permission from the District? Has he provided the District with burn permits from local authorities?					
2.22	If burning, is the contractor burning at least 200' of FPL transmission lines or at least 200' of FPL distribution lines? (Burning is not allowed within any FPL easement.)					
2.23	If burning, is the contractor burning at least 200' of the limits of any utility right-of-way? (Contractor must provide written permission from the controlling agency.)					
2.24	Has the contractor avoided interfering with the operations of any irrigation facilities including, but not limited to, pump stations, culverts, valves, canals and ditches? (Not applying to drip irrigation pipe)					
2.25	Is work being conducted, in full accordance with the condition of any and all permits?					
2.26	Are all cleared materials and debris, except burned vegetation, being moved from the project and disposed of at an approved land fill or disposal site?					
2.27	Has the contractor discovered any suspect or detected contaminated soils?					

IF ANY OF THE ABOVE REQUIREMENTS WERE MARKED NO, EXPLAIN:

3	POST-CONSTRUCTION INSPECTIONS	NA	QC REP (INITIALS	DATE	QC REP (INITIALS	DATE
3.1	Has the Final Punch List been completed and provided to the District for this DFOW?					
3.2	Has the Pre-Final Punch List been completed and submitted for this DFOW?					
3.3	Has the Final Follow-up Control Phase Inspection been performed for this DFOW?					
3.4	Has the Final Acceptance Inspection been performed for this DFOW?					
3.5	Has the contractor submitted all required detailed drawings for this DFOW?					
3.6	Have all As-builts been Recorded for this DFOW?					

IF ANY OF THE ABOVE REQUIREMENTS WERE MARKED NO, EXPLAIN:

CONTRACTOR'S QC REPRESENTATIVE'S SIGNATURE	DATE	DISTRICT'S QA REPRESENTATIVE'S SIGNATURE	DATE

DFOW INSPECTION REPORT

PROJECT NAME: C-43 WEST BASIN STORAGE RESERVOIR
CONTRACT NUMBER: CN XXXXXXXXX
PACKAGE 4 - CIVIL WORKS

DEFINEABLE FEATURE OF WORK:	DITCH AND CANAL FILLING		
PRIME CONTRACTOR:		**DATE:**	
PRIME CONTRACTOR SUPERVISOR:			
QUALITY CONTROL SYSTEMS MANAGER:			
QC SPECIALIST:			
SUBCONTRACTOR:			
ACTIVITY:			
ACTIVITY LOCATION:			
ACTIVITY SPECIFICATIONS:	31 23 13		

1	PRE-CONSTRUCTION INSPECTIONS	NA	QC REP (INITIALS	DATE	QC REP (INITIALS	DATE
1.1	Have the DFOW specifications and drawings been reviewed with the understanding of specified requirements?					
1.2	Have the CQCP and AHA been reviewed with the comprehension and awareness of their Requirements?					
1.3	Have all pre-construction submittals and work plans been approved for this DFOW by the District?					
1.4	Have all RFIs been answered, reviewed and understood by the appropriate CQC Staff, Superintendant and required subcontractor?					
1.5	Has previous work been completed to enable this DFOW to begin without covering up non-compliance work?					
1.6	Has any and all preliminary work been completed in order to begin work for this DFOW?					
1.7	Have all as-builts been recorded from previous DFOW?					
1.8	Materials: Do all materials and equipment conform to the specification?					
1.9	Have all materials and equipment been handled and stored in accordance with the project specifications and the manufacturer's recommendations of requirements?					
1.10	Has the contractor received all required written approvals by the District to begin work for this DFOW?					
1.11	Are all erosion and sediment control measures in place and the project signage on site prior to beginning any construction?					
1.11	Has the Preparatory Control Phase Inspection been performed and properly documented for this DFOW?					

IF ANY OF THE ABOVE REQUIREMENTS WERE MARKED NO, EXPLAIN:

2	CONSTRUCTION INSPECTIONS		NA	QC REP (INITIALS	DATE	QC REP (INITIALS	DATE
2.1	Has the Initial Control Phase Inspection been performed for this DFOW?						
2.2	Are the DQCRs and Daily Safety Reports current and complete with the correct information documenting this DFOW?						
2.3	Has the contractor removed topsoil and all sand with roots and other vegetative matter from the subgrade soils to the limits shown on the Drawings?						
2.4	Has the contractor performed pre-trenching along the lines shown on the Drawings for exploration of and removal of existing buried irrigation and drainage (and all other) conduits within the limits shown on the Drawings? Has the contractor documented removal of all conduits using survey control with an accuracy of one foot horizontal and 0.1 foot vertical?						
2.5	Is the contractor preventing and controlling erosion and water pollution per Florida Department of Environmental Protection (FDEP) regulations and permit conditions?						
2.6	Is the contractor complying with the conditions described in Section 33 03 00 TURBIDITY CONTROL AND MONITORING?						
2.7	Is the contractor preventing and controlling dust?						
2.8	Has the contractor excavated to remove all vegetation, roots, and soft sediments from the existing canals and 10th Row Ditches associated with the former citrus grove? (The excavations are to be completed in the manner shown on the Drawings.)						
2.9	Has the contractor provided Dewatering to allow for excavations and inspection of the canals and 10th Row Ditches in a dry condition?						
2.10	Has the contractor backfilled the inspected and approved excavations with Embankment Fill as described in Specification 31 00 00?						
2.11	Has the contractor performed successful In-Place Density testing, 1 per 100 lf of ditch backfill in accordance with ASTM D 6938?						
2.12	Has the contractor performed the Proof of Concept work as specified in section 31 23 13, 3.5?						
2.13	Foundation Soil Mapping- Has the District completed all foundation soil mapping/inspections?						
2.14	Has the District submitted weekly Foundation Grade Status Reports as specified in section 31 23 13, 3.8?						
2.15	Has the contractor backfilled the ditches and /or canals with Embankment material as specified in section 31 23 13, 3.4 and in accordance with section 31 00 00?						
2.16	Has the contractor performed In-place density tests at the rate of 1 per 100 lf of backfill per 8" lift?						

IF ANY OF THE ABOVE REQUIREMENTS WERE MARKED NO, EXPLAIN:

3	POST-CONSTRUCTION INSPECTIONS	NA	QC REP (INITIALS	DATE	QC REP (INITIALS	DATE
3.1	Has the Final Punch List been completed and provided to the District for this DFOW?					
3.2	Has the Pre-Final Punch List been completed and submitted for this DFOW?					
3.3	Has the Final Follow-up Control Phase Inspection been performed for this DFOW?					
3.4	Has the Final Acceptance Inspection been performed for this DFOW?					
3.5	Have all asbuilts been recorded for this DFOW?					
3.6	WARRANTY: Has the warranty met the requirements specified in Section 01 61 03 EQUIPMENT AND MATERIALS?					

IF ANY OF THE ABOVE REQUIREMENTS WERE MARKED NO, EXPLAIN:

CONTRACTOR'S QC REPRESENTATIVE'S SIGNATURE	DATE	DISTRICT'S QA REPRESENTATIVE'S SIGNATURE	DATE

DFOW INSPECTION REPORT

PROJECT NAME: C-43 WEST BASIN STORAGE RESERVOIR
CONTRACT NUMBER: CN XXXXXXXXX
PACKAGE 4 - CIVIL WORKS

DEFINEABLE FEATURE OF WORK:	PAVING		
PRIME CONTRACTOR:		**DATE:**	
PRIME CONTRACTOR SUPERVISOR:			
QUALITY CONTROL SYSTEMS MANAGER:			
QC SPECIALIST:			
SUBCONTRACTOR:			
ACTIVITY:			
ACTIVITY LOCATION:			
ACTIVITY SPECIFICATIONS:	32 11 23.10, 32 12 13, 32 12 16, 32 17 23 & 32 16 23		

1	PRE-CONSTRUCTION INSPECTIONS	NA	QC REP (INITIALS	DATE	QC REP (INITIALS	DATE
1.1	Have the DFOW specifications and drawings been reviewed with the understanding of specified requirements?					
1.2	Have the CQCP and AHA been reviewed with the comprehension and awareness of their Requirements?					
1.3	Have all pre-construction submittals and work plans been approved for this DFOW by the District?					
1.4	Have all RFIs been answered, reviewed and understood by the appropriate CQC Staff, Superintendant and required subcontractor?					
1.5	Has previous work been completed to enable this DFOW to begin without covering up non-compliance work?					
1.6	Has any and all preliminary work been completed in order to begin work for this DFOW?					
1.7	Have all as-builts been recorded from previous DFOW?					
1.8	Materials: Do all materials and equipment conform to the specification?					
1.9	Have all materials and equipment been handled and stored in accordance with the project specifications and the manufacturer's recommendations of requirements?					
1.10	Has the contractor received all required written approvals by the District to begin work for this DFOW?					
1.11	Has the Preparatory Control Phase Inspection been performed and properly documented for this DFOW?					

IF ANY OF THE ABOVE REQUIREMENTS WERE MARKED NO, EXPLAIN:

2	CONSTRUCTION INSPECTIONS	NA	QC REP (INITIALS	DATE	QC REP (INITIALS	DATE
2.1	Has the Initial Control Phase Inspection been performed for this DFOW?					
2.2	Are the DQCRs and Daily Safety Reports current and complete with the correct information documenting this DFOW?					
2.3	Has the contractor performed field density tests, 1 per lift per 250 square feet, in accordance with ASTM D2922, Test for Density of Soil and Soil-Aggregate in Place by the Nuclear Method in the areas determined by the District?					
2.4	Has the contractor performed smoothness test with a 10-foot straightedge applied parallel with and at right angles to the center line of the finished surface? Has the contractor corrected surface deviations more than 1/4 inch by loosening, adding or removing material, reshaping, watering, and compacting? (When base course is constructed in more than one layer, smoothness requirements apply only to the top layer.)					
2.5	Has the contractor taken at least one depth measurement for each 500 square yards of completed base course, making depth measurements by test holes, at least 3 inches in diameter, through the course? (Where thickness deficiency exceeds 1/2 inch, correct by scarifying, adding mixture of proper gradation, reblading, and recompacting.)					
2.6	Unless otherwise noted, has the contractor placed limerock aggregate in conformance with Section 200 "Base Rock" of the FDOT Standard Specifications for Road and Bridge Construction?					
2.7	Has the contractor tested samples of the material in accordance with section 32 12 13, 3.6 and 3.7?					
2.8	Immediately before applying the bituminous coat, did the contractor remove all loose material, dirt, clay, or other objectionable material from the surface to be treated by means of a power broom or blower supplemented with hand brooms? (Apply treatment only when the surface is dry and clean.)					
2.9	Before providing the complete bituminous coat, did the contractor apply three lengths of at least 100 feet for the full width of the distributor bar to evaluate the amount of bituminous material that can be satisfactorily applied?					
2.10	Has the District been permitted unrestricted access to inspect the Contractor's laboratory facility, to witness quality control activities, and to perform any check testing desired, as specified in section 32 12 16, 3.9.2?					
2.11	Has the contractor performed Asphalt Content testing as specified in 32 12 16, 3.9.3 and 3.9.3.1 and adhering to the approved "Hot Mix Asphalt" Quality Control Plan?					
2.12	Has the contractor performed Aggregate Gradation testing as specified in 32 12 16, 3.9.3 and 3.9.3.2 and adhering to the approved "Hot Mix Asphalt" Quality Control Plan?					
2.13	Has the contractor performed Temperature checks as specified in 32 12 16, 3.9.3 and 3.9.3.3 and adhering to the approved "Hot Mix Asphalt" Quality Control Plan?					
2.14	Has the contractor performed Aggregate Moisture Content testing as specified in 32 12 16, 3.9.3 and 3.9.3.4 and adhering to the approved "Hot Mix Asphalt" Quality Control Plan?					

2.15	Has the contractor performed Mixture Moisture Content testing as specified in 32 12 16, 3.9.3 and 3.9.3.5 and adhering to the approved "Hot Mix Asphalt" Quality Control Plan?						
2.16	Has the contractor performed Laboratory Air Voids testing as specified in 32 12 16, 3.9.3 and 3.9.3.6 and adhering to the approved "Hot Mix Asphalt" Quality Control Plan?						
2.17	Has the contractor performed In-Place Density testing as specified in 32 12 16, 3.9.3 and 3.9.3.7 and adhering to the approved "Hot Mix Asphalt" Quality Control Plan?						
2.18	Has the contractor performed Grade and Smoothness checks as specified in 32 12 16, 3.9.3 and 3.9.3.8 and adhering to the approved "Hot Mix Asphalt" Quality Control Plan?						
2.19	CONCRETE SIDEWALKS- CONCRETE WALKS AND RAMPS: Has the contractor constructed concrete sidewalks and						
2.20	CONCRETE SIDEWALKS- CURBS AND GUTTERS: Has the contractor constructed concrete curbs and gutters as specified in FDOT Specifications Section 520 where shown on the Drawings?						
2.21	CONCRETE SIDEWALKS- MISCELLANEOUS CONCRETE SLABS: Has the contractor constructed miscellaneous concrete slabs for mechanical equipment as indicated on the Drawings and as specified in FDOT Specifications Section 350?						
2.22	CONCRETE SIDEWALKS- PRE-CAST CONCRETE WHEEL STOPS: Has the contractor installed pre-cast concrete wheel stops by anchoring them with at least two (2) one-half inch (#4) round reinforcing bars driven a minimum of twelve (12) inches into the pavement? (Wheel stops damaged when driving rods shall be replaced with new wheel stops.)						
2.23	CONCRETE SIDEWALKS- FORMS: Has the contractor installed the forms in accordance section 32 16 23, 3.5?						
2.24	CONCRETE SIDEWALKS- Contraction Joints: Has the contractor constructed contraction joints at locations indicated in accordance with section 32 16 23, 3.6 A?						
2.25	CONCRETE SIDEWALKS- Expansion Joints: Has the contractor constructed expansion joints at locations indicated in accordance with section 32 16 23, 3.6 B?						
2.26	CONCRETE SIDEWALKS- Construction Joints: Has the contractor constructed construction joints at locations indicated in accordance with section 32 16 23, 3.6 C?						

IF ANY OF THE ABOVE REQUIREMENTS WERE MARKED NO, EXPLAIN:

3	POST-CONSTRUCTION INSPECTIONS	NA	QC REP (INITIALS	DATE	QC REP (INITIALS	DATE
3.1	Has the Final Punch List been completed and provided to the District for this DFOW?					
3.2	Has the Pre-Final Punch List been completed and submitted for this DFOW?					
3.3	Has the Final Follow-up Control Phase Inspection been performed for this DFOW?					
3.4	Has the Final Acceptance Inspection been performed for this DFOW?					
3.5	Have all asbuilts been recorded for this DFOW?					
3.6	WARRANTY: Has the warranty met the requirements specified in Section 01 61 03 EQUIPMENT AND MATERIALS?					

IF ANY OF THE ABOVE REQUIREMENTS WERE MARKED NO, EXPLAIN:

CONTRACTOR'S QC REPRESENTATIVE'S SIGNATURE	DATE	DISTRICT'S QA REPRESENTATIVE'S SIGNATURE	DATE

DFOW INSPECTION REPORT

PROJECT NAME: C-43 WEST BASIN STORAGE RESERVOIR
CONTRACT NUMBER: CN XXXXXXXXX
PACKAGE 4 - CIVIL WORKS

DEFINEABLE FEATURE OF WORK:	ACCESS ROAD IMPROVEMENTS		
PRIME CONTRACTOR:		**DATE:**	
PRIME CONTRACTOR SUPERVISOR:			
QUALITY CONTROL SYSTEMS MANAGER:			
QC SPECIALIST:			
SUBCONTRACTOR:			
ACTIVITY:			
ACTIVITY LOCATION:			
ACTIVITY SPECIFICATIONS:	32 11 39		

1	PRE-CONSTRUCTION INSPECTIONS	NA	QC REP (INITIALS	DATE	QC REP (INITIALS	DATE
1.1	Have the DFOW specifications and drawings been reviewed with the understanding of specified requirements?					
1.2	Have the CQCP and AHA been reviewed with the comprehension and awareness of their Requirements?					
1.3	Have all pre-construction submittals and work plans been approved for this DFOW by the District?					
1.4	Have all RFIs been answered, reviewed and understood by the appropriate CQC Staff, Superintendant and required subcontractor?					
1.5	Has previous work been completed to enable this DFOW to begin without covering up non-compliance work?					
1.6	Has any and all preliminary work been completed in order to begin work for this DFOW?					
1.7	Have all as-builts been recorded from previous DFOW?					
1.8	Materials: Do all materials and equipment conform to the specification?					
1.9	Have all materials and equipment been handled and stored in accordance with the project specifications and the manufacturer's recommendations of requirements?					
1.10	Has the contractor received all required written approvals by the District to begin work for this DFOW?					
1.11	Has the Preparatory Control Phase Inspection been performed and properly documented for this DFOW?					

IF ANY OF THE ABOVE REQUIREMENTS WERE MARKED NO, EXPLAIN:

2	CONSTRUCTION INSPECTIONS	NA	QC REP (INITIALS	DATE	QC REP (INITIALS	DATE
2.1	Has the Initial Control Phase Inspection been performed for this DFOW?					
2.2	Are the DQCRs and Daily Safety Reports current and complete with the correct information documenting this DFOW?					
2.3	PREPARATION- Did the contractor complete the area to be stabilized to the lines and to a grade parallel to the finished elevation of the stabilized base before the stabilizing material was added?					
2.4	SPREADING AND MIXING- Did the contractor spread and mix the shell rock on areas to be stabilized in accordance with section 32 11 39, 3.2?					
2.5	MIXING DEPTH- Did the contractor mix the shell rock and soil to a depth as indicated and in accordance with FDOT Standard Specifications for Road and Bridge Construction Section 230-5.5?					
2.6	SURFACE- After mixing of the shellrock was completed, did the contractor shape the surface so that, after being compacted, it conformed to the lines and grades as indicated or as directed in the field?					
2.7	COMPACTING AND FINISHING BASE- After the spreading and mixing operations were complete, did the contractor compact the mixed soil/shell rock base as specified in section 32 11 39, 3.5?					

IF ANY OF THE ABOVE REQUIREMENTS WERE MARKED NO, EXPLAIN:

3	POST-CONSTRUCTION INSPECTIONS	NA	QC REP (INITIALS	DATE	QC REP (INITIALS	DATE
3.1	Has the Final Punch List been completed and provided to the District for this DFOW?					
3.2	Has the Pre-Final Punch List been completed and submitted for this DFOW?					
3.3	Has the Final Follow-up Control Phase Inspection been performed for this DFOW?					
3.4	Has the Final Acceptance Inspection been performed for this DFOW?					
3.5	Have all asbuilts been recorded for this DFOW?					
3.6	WARRANTY: Has the warranty met the requirements specified in Section 01 61 03 EQUIPMENT AND MATERIALS?					

IF ANY OF THE ABOVE REQUIREMENTS WERE MARKED NO, EXPLAIN:

CONTRACTOR'S QC REPRESENTATIVE'S SIGNATURE	DATE	DISTRICT'S QA REPRESENTATIVE'S SIGNATURE	DATE

DFOW INSPECTION REPORT

PROJECT NAME: C-43 WEST BASIN STORAGE RESERVOIR
CONTRACT NUMBER: CN XXXXXXXXX
PACKAGE 4 - CIVIL WORKS

DEFINEABLE FEATURE OF WORK:	**FENCING- CATTLE GUARD**		
PRIME CONTRACTOR:		**DATE:**	
PRIME CONTRACTOR SUPERVISOR:			
QUALITY CONTROL SYSTEMS MANAGER:			
QC SPECIALIST:			
SUBCONTRACTOR:			
ACTIVITY:			
ACTIVITY LOCATION:			
ACTIVITY SPECIFICATIONS:	**32 31 53**		

1	PRE-CONSTRUCTION INSPECTIONS	NA	QC REP (INITIALS	DATE	QC REP (INITIALS	DATE
1.1	Have the DFOW specifications and drawings been reviewed with the understanding of specified requirements?					
1.2	Have the CQCP and AHA been reviewed with the comprehension and awareness of their Requirements?					
1.3	Have all pre-construction submittals and work plans been approved for this DFOW by the District?					
1.4	Have all RFIs been answered, reviewed and understood by the appropriate CQC Staff, Superintendant and required subcontractor?					
1.5	Has previous work been completed to enable this DFOW to begin without covering up non-compliance work?					
1.6	Has any and all preliminary work been completed in order to begin work for this DFOW?					
1.7	Have all as-builts been recorded from previous DFOW?					
1.8	Materials: Do all materials and equipment conform to the specification?					
1.9	Have all materials and equipment been handled and stored in accordance with the project specifications and the manufacturer's recommendations of requirements?					
1.10	Has the contractor received all required written approvals by the District to begin work for this DFOW?					
1.11	Has the Preparatory Control Phase Inspection been performed and properly documented for this DFOW?					

IF ANY OF THE ABOVE REQUIREMENTS WERE MARKED NO, EXPLAIN:

2	CONSTRUCTION INSPECTIONS	NA	QC REP (INITIALS	DATE	QC REP (INITIALS	DATE
2.1	Has the Initial Control Phase Inspection been performed for this DFOW?					
2.2	Are the DQCRs and Daily Safety Reports current and complete with the correct information documenting this DFOW?					
2.3	EARTHWORK- Was the excavation and backfill performed in accordance with the requirements for appurtenances found in Section 31 00 00 EARTHWORK?					
2.4	CONCRETE FOUNDATION- Is the cattle guard foundation cast in place reinforced concrete formed to create vertical walls on all four sides with the long sides supporting the cattle guard with the interior of the foundation open to allow for additional excavation below the foundation bottom?					
2.5	CATTLE GUARD- Did the contractor develop the cattle guard design for each of the cattle guards completed under the supervision of, and signed and sealed by a qualified Florida registered professional engineer?					
2.6	CATTLE GUARD WINGS- Did the contractor develop the cattle guard wing design for each of the cattle guards, constructed of steel with the wings designed so they can be bolted to the cattle guard once the cattle guard is in place? Did the contractor paint the cattle guard wings using the same system as noted for the cattle guard?					
2.7	PAINTING- Prior to shop painting the cattle guard surfaces, was the cattle guard prepared in conformance with SSPC SP16 standard, painting the cattle guard and all associated hardware using the three-coat system as specified in section 32 31 53, 3.5?					
2.8	FENCING- Did the contractor connect the adjacent fence fabric/material to each cattle guard wing so that there is no access from one side of the fence to the other at the cattle wings?					
2.9	DRAINAGE- Was the cattle guard excavated and backfill to create the proper drainage as specified in section 32 31 53, 3.7?					
2.10	CLEAN UP- After installation was completed, did the contractor thoroughly clean metal components, interior and exterior, exposed surfaces in a manner acceptable to the District and in accordance with cattle guard Manufacturer's recommendations? Was work that was damaged or defective replaced?					

IF ANY OF THE ABOVE REQUIREMENTS WERE MARKED NO, EXPLAIN:

3	POST-CONSTRUCTION INSPECTIONS	NA	QC REP (INITIALS	DATE	QC REP (INITIALS	DATE
3.1	Has the Final Punch List been completed and provided to the District for this DFOW?					
3.2	Has the Pre-Final Punch List been completed and submitted for this DFOW?					
3.3	Has the Final Follow-up Control Phase Inspection been performed for this DFOW?					
3.4	Has the Final Acceptance Inspection been performed for this DFOW?					
3.5	Have all asbuilts been recorded for this DFOW?					
3.6	WARRANTY: Has the warranty met the requirements specified in Section 01 61 03 EQUIPMENT AND MATERIALS?					

IF ANY OF THE ABOVE REQUIREMENTS WERE MARKED NO, EXPLAIN:

CONTRACTOR'S QC REPRESENTATIVE'S SIGNATURE	DATE	DISTRICT'S QA REPRESENTATIVE'S SIGNATURE	DATE

DFOW INSPECTION REPORT

PROJECT NAME: C-43 WEST BASIN STORAGE RESERVOIR
CONTRACT NUMBER: CN XXXXXXXXX
PACKAGE 4 - CIVIL WORKS

DEFINEABLE FEATURE OF WORK:	FENCING- CHAIN LINK FENCING		
PRIME CONTRACTOR:		**DATE:**	
PRIME CONTRACTOR SUPERVISOR:			
QUALITY CONTROL SYSTEMS MANAGER:			
QC SPECIALIST:			
SUBCONTRACTOR:			
ACTIVITY:			
ACTIVITY LOCATION:			
ACTIVITY SPECIFICATIONS:	32 31 13		

1	PRE-CONSTRUCTION INSPECTIONS	NA	QC REP (INITIALS	DATE	QC REP (INITIALS	DATE
1.1	Have the DFOW specifications and drawings been reviewed with the understanding of specified requirements?					
1.2	Have the CQCP and AHA been reviewed with the comprehension and awareness of their Requirements?					
1.3	Have all pre-construction submittals and work plans been approved for this DFOW by the District?					
1.4	Have all RFIs been answered, reviewed and understood by the appropriate CQC Staff, Superintendant and required subcontractor?					
1.5	Has previous work been completed to enable this DFOW to begin without covering up non-compliance work?					
1.6	Has any and all preliminary work been completed in order to begin work for this DFOW?					
1.7	Have all as-builts been recorded from previous DFOW?					
1.8	Materials: Do all materials and equipment conform to the specification?					
1.9	Have all materials and equipment been handled and stored in accordance with the project specifications and the manufacturer's recommendations of requirements?					
1.10	Has the contractor received all required written approvals by the District to begin work for this DFOW?					
1.11	Has the Preparatory Control Phase Inspection been performed and properly documented for this DFOW?					

IF ANY OF THE ABOVE REQUIREMENTS WERE MARKED NO, EXPLAIN:

2	CONSTRUCTION INSPECTIONS	NA	QC REP (INITIALS	DATE	QC REP (INITIALS	DATE
2.1	Has the Initial Control Phase Inspection been performed for this DFOW?					
2.2	Are the DQCRs and Daily Safety Reports current and complete with the correct information documenting this DFOW?					
2.3	PREPARATION- Did the contractor ensure final grading and established elevations are completed prior to commencing fence installation?					
2.4	Clearing and Grading- Did the contractor clear fence lines of trees, brush, and other obstacles to install fencing for a distance of 15 feet inside; and 15 feet outside the fence and establish a graded, compacted fence line prior to fencing installation?					
2.5	Fence Installation- Did the contractor install fence on prepared surfaces to line and grade indicated and in accordance with fence manufacturer's written installation instructions except as modified in the plans?					
2.6	Post Spacing- Did the contractor provide line posts spaced equidistantly apart, not exceeding 10 feet on center and in accordance with section 32 31 13, 3.2.1.1?					
2.7	Top and Bottom Tension Wire- Did the contractor install bottom tension wires before installing chain-link fabric, and pulling wires taut, placing the top and bottom tension wires within 8 inches of respective fabric line?					
2.8	Excavation- Did the contractor perform excavation activities as indicated in section 32 31 13, 3.2.2?					
2.9	Setting posts- Did the contractor install fence post as indicated in section 32 31 13, 3.2.3?					
2.10	Earth and Bedrock- Did the contractor provide concrete bases of dimensions indicated and compact concrete to eliminate voids, and finish to a dome shape?					
2.11	Concrete Slabs and Walls- Did the contractor set posts into zinc-coated sleeves, set in concrete slab or wall, to a minimum depth of 12 inches, filling sleeve joints with nonshrink grout, or other approved material? Did the contractor set posts for support of removable fence sections into sleeves that provide tight sliding joints and held posts aligned and plumb without use of setting material?					
2.13	Bracing- Did the contractor brace gates, corners, ends, and pull posts to nearest post with horizontal brace rails and diagonal tension rod with the tolerance stated in section 32 31 13, 3.2.3.3?					

2.14	Concrete Strength- Did the contractor provide concrete that attained at least 75 percent of its minimum 28-day compressive strength, but in no case sooner than 7 calendar days after placement, before rails, tension wire, or fabric were installed? (Do not stretch fabric and wires or hang gates until the concrete has attained its FULL design strength.) Did the contractor sample and test the concrete to determine as specified?						
2.15	Top Rails- Are the top rails provided and installed per section 32 31 13, 3.2.5?						
2.16	Brace Assembly- Did the contractor provide and install brace assembly in accordance with section 32 31 13, 3.2.6?						
2.17	Tension Wire Installation- Is the tension wire provided and installed per section 32 31 13, 3.2.7?						
2.18	Fabric Installation- Is the fabric provided and installed per section 32 31 13, 3.2.8?						
2.19	Stretcher Bar Installation- Are stretcher bars provided and installed per section 32 31 13, 3.2.9?						
2.20	Gate Installation- Are gates installed per section 32 31 13, 3.2.10?						
2.21	Wire Ties- Are wire ties provided and installed per section 32 31 13, 3.2.11?						
2.22	Fasteners- Are fasteners provided and installed per section 32 31 13, 3.2.12?						
2.23	Zinc-Coating Repair- Has the contractor cleaned and repaired galvanized surfaces damaged by welding or abrasion, and cut ends of fabric, or other cut sections with specified galvanizing repair material applied in strict conformance with the manufacturer's printed instructions?						
2.24	Post Caps- Are post caps istalled as recommended by the manufacturer?						
2.25	Padlocks- Are padlocks, chains and keys provide for as per section 32 31 13, 3.2.14.2?						
2.26	Warning Sign- Have signs been attached to the fence as indicated on the drawings?						
2.27	Barbed Wire and Supporting Arms- Have the supporting arms and the barbed wire outrigger system been installed as recommended by the manufacturer?						
2.28	Grounding- Has the fence been grounded as indicated on drawings and as specified in section 32 31 13, 2.2.17?						

IF ANY OF THE ABOVE REQUIREMENTS WERE MARKED NO, EXPLAIN:

3	POST-CONSTRUCTION INSPECTIONS	NA	QC REP (INITIALS	DATE	QC REP (INITIALS	DATE
3.1	Has the Final Punch List been completed and provided to the District for this DFOW?					
3.2	Has the Pre-Final Punch List been completed and submitted for this DFOW?					
3.3	Has the Final Follow-up Control Phase Inspection been performed for this DFOW?					
3.4	Has the Final Acceptance Inspection been performed for this DFOW?					

3.5	Have all asbuilts been recorded for this DFOW?						
3.6	Has the contractor removed waste fencing materials and other debris from the work site?						
3.7	Has the contractor submitted manufacturer's data indicating percentage of recycled material content in protective fence materials, including chain link fence, fabric, and gates to verifying affirmative procurement compliance?						
3.8	WARRANTY: Has the warranty met the requirements specified in Section 01 61 03 EQUIPMENT AND MATERIALS?						

IF ANY OF THE ABOVE REQUIREMENTS WERE MARKED NO, EXPLAIN:

CONTRACTOR'S QC REPRESENTATIVE'S SIGNATURE	DATE	DISTRICT'S QA REPRESENTATIVE'S SIGNATURE	DATE

DFOW INSPECTION REPORT

PROJECT NAME: C-43 WEST BASIN STORAGE RESERVOIR
CONTRACT NUMBER: CN XXXXXXXXX
PACKAGE 4 - CIVIL WORKS

DEFINEABLE FEATURE OF WORK:	**FENCING- WIRE FENCES AND GATES**		
PRIME CONTRACTOR:		**DATE:**	
PRIME CONTRACTOR SUPERVISOR:			
QUALITY CONTROL SYSTEMS MANAGER:			
QC SPECIALIST:			
SUBCONTRACTOR:			
ACTIVITY:			
ACTIVITY LOCATION:			
ACTIVITY SPECIFICATIONS:	**32 31 26**		

1	PRE-CONSTRUCTION INSPECTIONS	NA	QC REP (INITIALS	DATE	QC REP (INITIALS	DATE
1.1	Have the DFOW specifications and drawings been reviewed with the understanding of specified requirements?					
1.2	Have the CQCP and AHA been reviewed with the comprehension and awareness of their Requirements?					
1.3	Have all pre-construction submittals and work plans been approved for this DFOW by the District?					
1.4	Have all RFIs been answered, reviewed and understood by the appropriate CQC Staff, Superintendant and required subcontractor?					
1.5	Has previous work been completed to enable this DFOW to begin without covering up non-compliance work?					
1.6	Has any and all preliminary work been completed in order to begin work for this DFOW?					
1.7	Have all as-builts been recorded from previous DFOW?					
1.8	Materials: Do all materials and equipment conform to the specification?					
1.9	Have all materials and equipment been handled and stored in accordance with the project specifications and the manufacturer's recommendations of requirements?					
1.10	Has the contractor received all required written approvals by the District to begin work for this DFOW?					
1.11	Has the Preparatory Control Phase Inspection been performed and properly documented for this DFOW?					

IF ANY OF THE ABOVE REQUIREMENTS WERE MARKED NO, EXPLAIN:

2	CONSTRUCTION INSPECTIONS	NA	QC REP (INITIALS	DATE	QC REP (INITIALS	DATE
2.1	Has the Initial Control Phase Inspection been performed for this DFOW?					
2.2	Are the DQCRs and Daily Safety Reports current and complete with the correct information documenting this DFOW?					
2.3	INSTALLATION- Has the contractor installed the fence to the lines and grades indicated?					
2.4	INSTALLATION- Has the contractor cleared the area on either side of the fence line to the extent indicated?					
2.5	INSTALLATION- Has the contractor spaced line posts equidistant at intervals not exceeding 10 feet and set terminal (corner, gate, and pull) posts at abrupt changes in vertical and horizontal alignment? (Provide continuous fabric between terminal posts; however, runs between terminal posts shall not exceed 500 feet.)					
2.6	INSTALLATION- Has the contractor repaired with paint containing zinc dust in accordance with ASTM A780/A780M, any damage to galvanized surfaces, including welding?					
2.7	EXCAVATION- Has the contractor performed the excavation per section 32 31 16, 3.2?					
2.8	POST INSTALLATION- Has the contractor installed all post in accordance with section 32 31 16, 3.3?					
2.9	BARBED WIRE- Has the contractor installed wire on the side of the post indicated, pulling wire taut to provide a smooth uniform appearance, free from sag and fastened wire to line posts at approximately 15 inch intervals?					
2.10	WIRE INSTALLATION- Has the contractor installed wire in accordance with section 32 31 16, 3.5?					
2.11	GATE ASSEMBLY- Has the contractor provided and installed gates as indicated in the drawings and specification 32 31 16, 3.6?					
2.12	GROUNDING- Has the contractor installed grounding as per section 32 31 16, 3.7?					

IF ANY OF THE ABOVE REQUIREMENTS WERE MARKED NO, EXPLAIN:

3	POST-CONSTRUCTION INSPECTIONS	NA	QC REP (INITIALS	DATE	QC REP (INITIALS	DATE
3.1	Has the Final Punch List been completed and provided to the District for this DFOW?					
3.2	Has the Pre-Final Punch List been completed and submitted for this DFOW?					
3.3	Has the Final Follow-up Control Phase Inspection been performed for this DFOW?					
3.4	Has the Final Acceptance Inspection been performed for this DFOW?					
3.5	Have all asbuilts been recorded for this DFOW?					

3.6	WARRANTY: Has the warranty met the requirements specified in Section 01 61 03 EQUIPMENT AND MATERIALS?			_____	_____	_____	_____

IF ANY OF THE ABOVE REQUIREMENTS WERE MARKED NO, EXPLAIN:

CONTRACTOR'S QC REPRESENTATIVE'S SIGNATURE	DATE	DISTRICT'S QA REPRESENTATIVE'S SIGNATURE	DATE

DFOW INSPECTION REPORT

PROJECT NAME: C-43 WEST BASIN STORAGE RESERVOIR
CONTRACT NUMBER: CN XXXXXXXXX
PACKAGE 4 - CIVIL WORKS

DEFINEABLE FEATURE OF WORK:	FENCING- WOOD FENCES AND GATES		
PRIME CONTRACTOR:		**DATE:**	
PRIME CONTRACTOR SUPERVISOR:			
QUALITY CONTROL SYSTEMS MANAGER:			
QC SPECIALIST:			
SUBCONTRACTOR:			
ACTIVITY:			
ACTIVITY LOCATION:			
ACTIVITY SPECIFICATIONS:	32 31 29		

1	PRE-CONSTRUCTION INSPECTIONS	NA	QC REP (INITIALS	DATE	QC REP (INITIALS	DATE
1.1	Have the DFOW specifications and drawings been reviewed with the understanding of specified requirements?					
1.2	Have the CQCP and AHA been reviewed with the comprehension and awareness of their Requirements?					
1.3	Have all pre-construction submittals and work plans been approved for this DFOW by the District?					
1.4	Have all RFIs been answered, reviewed and understood by the appropriate CQC Staff, Superintendant and required subcontractor?					
1.5	Has previous work been completed to enable this DFOW to begin without covering up non-compliance work?					
1.6	Has any and all preliminary work been completed in order to begin work for this DFOW?					
1.7	Have all as-builts been recorded from previous DFOW?					
1.8	Materials: Do all materials and equipment conform to the specification?					
1.9	Have all materials and equipment been handled and stored in accordance with the project specifications and the manufacturer's recommendations of requirements?					
1.10	Has the contractor received all required written approvals by the District to begin work for this DFOW?					
1.11	Has the Preparatory Control Phase Inspection been performed and properly documented for this DFOW?					

IF ANY OF THE ABOVE REQUIREMENTS WERE MARKED NO, EXPLAIN:

2	CONSTRUCTION INSPECTIONS	NA	QC REP (INITIALS	DATE	QC REP (INITIALS	DATE
2.1	Has the Initial Control Phase Inspection been performed for this DFOW?					
2.2	Are the DQCRs and Daily Safety Reports current and complete with the correct information documenting this DFOW?					
2.3	INSTALLATION- Has the contractor installed fence to the lines and grades indicated and cleared the area on either side of the fence line to the extent indicated?					
2.4	POST INSTALLATION- Are all posts set true to lines and grades and line posts spaced equidistant at intervals not exceeding 10 feet?					
2.5	POST INSTALLATION- Are post holes excavated to depth indicated and did the contractor brace posts until backfill was completed? Did contractor place backfill in layers of 9 inches or less, moistened to optimum condition, and compacted with hand tampers?					
2.6	POST INSTALLATION- Did the contractor mill ends of rails so that they fit within the post notches and install rails level and to the dimensions indicated?					

IF ANY OF THE ABOVE REQUIREMENTS WERE MARKED NO, EXPLAIN:

3	POST-CONSTRUCTION INSPECTIONS	NA	QC REP (INITIALS	DATE	QC REP (INITIALS	DATE
3.1	Has the Final Punch List been completed and provided to the District for this DFOW?					
3.2	Has the Pre-Final Punch List been completed and submitted for this DFOW?					
3.3	Has the Final Follow-up Control Phase Inspection been performed for this DFOW?					
3.4	Has the Final Acceptance Inspection been performed for this DFOW?					
3.5	Have all asbuilts been recorded for this DFOW?					
3.6	WARRANTY: Has the warranty met the requirements specified in Section 01 61 03 EQUIPMENT AND MATERIALS?					

IF ANY OF THE ABOVE REQUIREMENTS WERE MARKED NO, EXPLAIN:

CONTRACTOR'S QC REPRESENTATIVE'S SIGNATURE	DATE	DISTRICT'S QA REPRESENTATIVE'S SIGNATURE	DATE

DFOW INSPECTION REPORT

PROJECT NAME: C-43 WEST BASIN STORAGE RESERVOIR
CONTRACT NUMBER: CN XXXXXXXXX
PACKAGE 4 - CIVIL WORKS

DEFINEABLE FEATURE OF WORK:	BOAT RAMPS		
PRIME CONTRACTOR:		**DATE:**	
PRIME CONTRACTOR SUPERVISOR:			
QUALITY CONTROL SYSTEMS MANAGER:			
QC SPECIALIST:			
SUBCONTRACTOR:			
ACTIVITY:			
ACTIVITY LOCATION:			
ACTIVITY SPECIFICATIONS:	03 11 13.00 10, 03 20 00.00 10, 03 31 01.00 10 & 03 35 00.00 10		

1	PRE-CONSTRUCTION INSPECTIONS	NA	QC REP (INITIALS	DATE	QC REP (INITIALS	DATE
1.1	Have the DFOW specifications and drawings been reviewed with the understanding of specified requirements?					
1.2	Have the CQCP and AHA been reviewed with the comprehension and awareness of their Requirements?					
1.3	Have all pre-construction submittals and work plans been approved for this DFOW by the District?					
1.4	Have all RFIs been answered, reviewed and understood by the appropriate CQC Staff, Superintendant and required subcontractor?					
1.5	Has previous work been completed to enable this DFOW to begin without covering up non-compliance work?					
1.6	Has any and all preliminary work been completed in order to begin work for this DFOW?					
1.7	Have all as-builts been recorded from previous DFOW?					
1.8	Materials: Do all materials and equipment conform to the specification?					
1.9	Have all materials and equipment been handled and stored in accordance with the project specifications and the manufacturer's recommendations of requirements?					
1.10	Has the contractor received all required written approvals by the District to begin work for this DFOW?					
1.11	Has the Preparatory Control Phase Inspection been performed and properly documented for this DFOW?					

IF ANY OF THE ABOVE REQUIREMENTS WERE MARKED NO, EXPLAIN:

2	CONSTRUCTION INSPECTIONS	NA	QC REP (INITIALS	DATE	QC REP (INITIALS	DATE
2.1	Has the Initial Control Phase Inspection been performed for this DFOW?					
2.2	Are the DQCRs and Daily Safety Reports current and complete with the correct information documenting this DFOW?					
2.3	CAST-IN-PLACE CONCRETE FORMING FORM TIES- Do all form ties that are being used during forming adhere to section 03 11 13.00 10, 2.3 and installed in compliance with ACI 301 section 2 with the surface tolerance in accordance with ACI 117?					
2.4	CAST-IN-PLACE CONCRETE FORMING FORM TIES- Are all form ties installed as specified in section 03 11 13.00 10, 3.1.1.1?					
2.5	CAST-IN-PLACE CONCRETE FORMING Taper Ties- After forms and taper ties are removed from wall, are tie holes plugged with neoprene plug in accordance with section 03 11 13.00 10, 3.1.1.2?					
2.6	CAST-IN-PLACE CONCRETE FORMING Dry-Pack of Taper Tie Holes- After installing plugs in tie holes, are tie hole surfaces coated with epoxy bonding agent and filled with dry-pack mortar as specified in sections 03 31 01.00 10 and 03 11 13.00 10, 3.1.1.2?					
2.7	CAST-IN-PLACE CONCRETE FORMING- Have all forms and embedded items been inspected in sufficient time prior to each concrete placement to certify to the District that they are ready to receive concrete and in accordance with 03 11 13.00 10, 3.2?					
2.8	CONCRETE REINFORCING REINFORCEMENT- Has the contractor fabricated and placed reinforcement steel and accessories as specified, as indicated, and as shown on approved shop drawings?					
2.9	CONCRETE REINFORCING WELDED-WIRE REINFORCEMENT PLACEMENT- Has the contractor placed welded-wire reinforcement in slabs as specified, as indicated, and as shown on approved shop drawings?					
2.10	CONCRETE REINFORCING DOWEL INSTALLATION- Has the contractor installed dowels in slabs on grade at locations indicated and at right angles to joint being doweled and as specified?					
2.11	CONCRETE REINFORCING TESTING AND INSPECTION- Are all formwork, installation of parts to be embedded, reinforcement steel, and preparation of surfaces involved been completed and accepted by the District at least 4 hours before placement of concrete?					
2.12	PREPARATION FOR PLACING CONCRETE Embedded Items- Before placement of concrete, did the contractor take care to determine that all embedded items were firmly and securely fastened in place as indicated on the drawings, or required and adhered to the specifications of section 03 31 01.00, 3.1.1?					

2.13	PREPARATION FOR PLACING CONCRETE Concrete on Earth Foundations- Has the contractor ensured that the earth surfaces upon which concrete is to be placed is clean, damp, and free from debris, frost, ice, and standing or running water? Prior to placement of concrete, was the earth foundation compacted in accordance with Section 31 00 00 EARTHWORK?						
2.14	PREPARATION FOR PLACING CONCRETE Concrete on Rock Foundations- Has the contractor ensured that the rock surfaces upon which concrete is to be placed is clean, free from oil, standing or running water, ice, mud, drummy rock, coating, debris, and loose, semidetached, or unsound fragment and adheres to section 03 31 01.00 10, 3.1.3?						
2.15	Construction Joint Treatment- Has the contractor submitted the method and equipment proposed for joint cleanup and waste disposal, for review and approval, submitted locations of construction joints and submitted sequencing plan for concrete pours?						
2.16	Construction Joint Treatment- Has the contractor conformed construction joint treatment in accordance with section 03 31 01.00 10, 3.1.4, including Joint Preparation, Air-Water Cutting, High-Pressure Water Jet, Wet Sandblasting and Waste Disposal?						
2.17	CONCRETE Pre-Pour Inspection Checklist- Before each concrete pour, has the contractor notified the District 24 hours before the scheduled concrete pour and that they are ready for a joint pre-pour inspection and has the inspection successfully been performed with both parties signing off on the pre-pour inspection checklist?						
2.18	CONVEYING AND PLACING CONCRETE Hot-Weather Requirements- Has contractor placed concrete in hot weather in accordance with ACI 305R?						
2.19	CONVEYING AND PLACING CONCRETE- Has the contractor conveyed and place concrete in accordance with ACI 301, Section 5 and in accordance with section 03 31 01.00 10, 3.2 and the drawings?						
2.20	CAST-IN-PLACE CONCRETE TESTS AND INSPECTIONS General- Has the contractor performed the inspections and tests specified in section 03 31 01.00 10, 3.5 and, based upon the results of these inspections and tests, taken the action required and submit reports as required? (When, in the opinion of the District, the concreting operation is out of control, cease concrete placement.)						
2.21	CAST-IN-PLACE CONCRETE TESTS AND INSPECTIONS General- Has the contractor located the laboratory performing the tests on site and conformed to ASTM C1077?						
2.22	CAST-IN-PLACE CONCRETE TESTS AND INSPECTIONS Fine Aggregates- Grading: At least once during each shift when the concrete plant is operating, has the contractor performed one sieve analysis and fineness modulus determination in accordance with ASTM C136/C136M and COE CRD-C 104 for the fine aggregate or for each size range of fine aggregate if it is batched in more than one size or classification and in accordance with section 03 31 01.00 10, 3.5.2.1.1 and 3.5.2.1.2?						

2.23	CAST-IN-PLACE CONCRETE TESTS AND INSPECTIONS Fine Aggregates- Moisture Content Testing: Has the contractor performed testing of the moisture content of the material in accordance with section 03 31 01.00 10, 3.5.2.1.3 and 3.5.2.1.4?						
2.24	CAST-IN-PLACE CONCRETE TESTS AND INSPECTIONS Coarse Aggregates- Grading: At least once during each shift in which the concrete plant is operating, has the contractor conducted a sieve analysis in accordance with ASTM C136/C136M for each size of coarse aggregate and in accordance with section 03 31 01.00 10, 3.5.2.2.1 and 3.5.2.2.2?						
2.25	CAST-IN-PLACE CONCRETE TESTS AND INSPECTIONS Coarse Aggregates- Moisture Content Testing: Has the contractor Made a test for moisture content of each size group of coarse aggregate at least twice per week and in accordance with section 03 31 01.00 10, 3.5.2.2.3 and 3.5.2.2.4?						
2.26	CAST-IN-PLACE CONCRETE TESTS AND INSPECTIONS Frequency of Quality Tests- Thirty days prior to the start of concrete placement, has the contractor performed all tests for aggregate quality listed in the Aggregate Quality Frequency Schedule of section 03 31 01.00 10, 3.5.2.3.1?						
2.27	CAST-IN-PLACE CONCRETE TESTS AND INSPECTIONS Frequency of Quality Tests- In addition, after the start of concrete placement, has the contractor performed tests for aggregate quality in accordance with the Aggregate Quality Frequency Schedule of section 03 31 01.00 10, 3.5.2.3.1? Were the samples tested after the start of concrete placement immediately prior to entering the concrete mixer?						
2.28	CAST-IN-PLACE CONCRETE TESTS AND INSPECTIONS Corrective Action for Aggregate Quality- Did the contractor adhere to section 03 31 01.00 10, 3.5.2.3.2 if the result of a quality test failed to meet the requirements for quality?						
2.29	CAST-IN-PLACE CONCRETE TESTS AND INSPECTIONS Scales- Has the contractor adhered to section 03 31 01.00, 3.5.2.4 including Weighing Accuracy, Batching and Recording Accuracy and Scales Corrective Actions?						
2.30	CAST-IN-PLACE CONCRETE TESTS AND INSPECTIONS Batch-Plant Control- Has the contractor continuously controlled the measurement of all constituent materials including cementitious materials, each size of aggregate, water, and admixtures as specified in section 03 31 01.00 10, 3.5.2.5?						
2.31	CAST-IN-PLACE CONCRETE TESTS AND INSPECTIONS Concrete Mixture- Air Content Testing: Has the contractor conducted Air Content Testing when test specimens are fabricated, including required additional testing, as well as plotting of the Air Content Testing as specified in section 03 31 01.00 10, 3.5.2.6.1 and 3.5.2.6.2?						

2.32	CAST-IN-PLACE CONCRETE TESTS AND INSPECTIONS Concrete Mixture- Slump Testing: Has the contractor conducted Slump Testing when test specimens are fabricated, including required additional testing, as well as plotting of the Slump Testing as specified in section 03 31 01.00 10, 3.5.2.6.3 and 3.5.2.6.4?						
2.33	CAST-IN-PLACE CONCRETE TESTS AND INSPECTIONS Concrete Mixture- Temperature: Has the contractor measured the temperature of the concrete when compressive strength specimens in paragraph entitled, "Compressive-Strength Specimens," are fabricated in accordance with ASTM C1064/C1064M?						
2.34	CAST-IN-PLACE CONCRETE TESTS AND INSPECTIONS Concrete Mixture- Compressive Strength: Has the contractor obtained fresh concrete samples and tested concrete for Compressive Strength during placement for testing, making 6 test cylinders (2 at 7 days, 2 at 28 days and 2 for hold) for each pour and for every 100 cubic yards of concrete placed in the same day thereafter?						
2.35	CAST-IN-PLACE CONCRETE TESTS AND INSPECTIONS Vibrators Testing- Has the contractor determined the frequency and amplitude of each vibrator in accordance with COE CRD-C 521 prior to initial use and at least once a month when concrete is being placed as specified in section 03 31 01.00 10, 3.5.2.9.1 and 3.5.2.9.2?						
2.36	CAST-IN-PLACE CONCRETE TESTS AND INSPECTIONS Mixer Uniformity- Stationary Mixers: Prior to the start of concrete placing and once every 6 months when concrete is being placed, or once for every 75,000 cubic yards of concrete placed, whichever results in the longest time interval, has the contractor determined uniformity of concrete mixing in accordance with ASTM C94/C94M?						
2.37	CAST-IN-PLACE CONCRETE TESTS AND INSPECTIONS Mixer Uniformity- Truck Mixers: Prior to the start of concrete placing and at least once every 6 months when concrete is being placed, has the contractor determined uniformity of concrete in accordance with ASTM C94/C94M and as specified in section 03 31 01.00 10, 3.5.2.10.2?						
2.38	CAST-IN-PLACE CONCRETE TESTS AND INSPECTIONS Reports- Has the contractor reported all results of tests or inspections conducted informally as they are completed and in writing daily as specified in section 03 31 01.00 10, 3.5.3?						
2.39	CONCRETE FINISHING- Has the contractor identified and finished the concrete surface as specified in section 03 35 00.00 10, Part 3?						

IF ANY OF THE ABOVE REQUIREMENTS WERE MARKED NO, EXPLAIN:

3	POST-CONSTRUCTION INSPECTIONS	NA	QC REP (INITIALS	DATE	QC REP (INITIALS	DATE
3.1	Has the Final Punch List been completed and provided to the District for this DFOW?					
3.2	Has the Pre-Final Punch List been completed and submitted for this DFOW?					
3.3	Has the Final Follow-up Control Phase Inspection been performed for this DFOW?					
3.4	Has the Final Acceptance Inspection been performed for this DFOW?					
3.5	Have all asbuilts been recorded for this DFOW?					
3.6	WARRANTY: Has the warranty met the requirements specified in Section 01 61 03 EQUIPMENT AND MATERIALS?					

IF ANY OF THE ABOVE REQUIREMENTS WERE MARKED NO, EXPLAIN:

CONTRACTOR'S QC REPRESENTATIVE'S SIGNATURE	DATE	DISTRICT'S QA REPRESENTATIVE'S SIGNATURE	DATE

DFOW INSPECTION REPORT

PROJECT NAME: C-43 WEST BASIN STORAGE RESERVOIR
CONTRACT NUMBER: CN XXXXXXXXX
PACKAGE 4 - CIVIL WORKS

DEFINEABLE FEATURE OF WORK:	SITE UTILITIES - STORM DRAINAGE		
PRIME CONTRACTOR:		**DATE:**	
PRIME CONTRACTOR SUPERVISOR:			
QUALITY CONTROL SYSTEMS MANAGER:			
QC SPECIALIST:			
SUBCONTRACTOR:			
ACTIVITY:			
ACTIVITY LOCATION:			
ACTIVITY SPECIFICATIONS:	33 40 00		

1	PRE-CONSTRUCTION INSPECTIONS	NA	QC REP (INITIALS	DATE	QC REP (INITIALS	DATE
1.1	Have the DFOW specifications and drawings been reviewed with the understanding of specified requirements?					
1.2	Have the CQCP and AHA been reviewed with the comprehension and awareness of their Requirements?					
1.3	Have all pre-construction submittals and work plans been approved for this DFOW by the District?					
1.4	Have all RFIs been answered, reviewed and understood by the appropriate CQC Staff, Superintendant and required subcontractor?					
1.5	Has previous work been completed to enable this DFOW to begin without covering up non-compliance work?					
1.6	Has any and all preliminary work been completed in order to begin work for this DFOW?					
1.7	Have all as-builts been recorded from previous DFOW?					
1.8	Materials: Do all materials and equipment conform to the specification?					
1.9	Have all materials and equipment been handled and stored in accordance with the project specifications and the manufacturer's recommendations of requirements?					
1.10	Has the contractor received all required written approvals by the District to begin work for this DFOW?					
1.11	Has the Preparatory Control Phase Inspection been performed and properly documented for this DFOW?					

IF ANY OF THE ABOVE REQUIREMENTS WERE MARKED NO, EXPLAIN:

2	CONSTRUCTION INSPECTIONS	NA	QC REP (INITIALS	DATE	QC REP (INITIALS	DATE
2.1	Has the Initial Control Phase Inspection been performed for this DFOW?					
2.2	Are the DQCRs and Daily Safety Reports current and complete with the correct information documenting this DFOW?					
2.3	Have Delivery, Storage and Handling conformed to specification 33 40 00, 1.6?					
2.4	When no bedding class is specified or detailed on the drawings, concrete pipe shall be bedded in granular material minimum 4 inch in depth in trenches with soil foundation.					
2.5	Depth of granular bedding in trenches with rock foundation shall be 1/2 inch in depth per foot of depth of fill, minimum depth of bedding shall be 8 inches up to maximum depth of 24 inches. The middle third of the granular bedding shall be loosely placed.					
2.6	Maximum deflection of the concrete pipe is 0 percent. Maximum allowable deflection of the PE pipe is 5 percent.					
2.7	Note post installation requirements of paragraph DEFLECTION TESTING in PART 3 of this specification for all pipe products including deflection testing requirements for flexible pipe.					
2.8	Where multiple lines of pipe are installed, adjacent sides of pipe shall be at least half the nominal pipe diameter or 3 feet apart, whichever is less.					
2.9	The backfill shall be brought up evenly on both sides of pipe for the full length of pipe. The fill shall be thoroughly compacted under the haunches of the pipe. Each layer shall be thoroughly compacted with mechanical tampers or rammers. This method of filling and compacting shall continue until the fill has reached an elevation equal to the midpoint (spring line) of concrete pipe or has reached an elevation of at least 12 inches above the top of the pipe for flexible pipe.					
2.10	The remainder of the trench shall be backfilled and compacted by spreading and rolling or compacted by mechanical rammers or tampers in layers not exceeding 8 inches.					
2.11	The fill material shall be uniformly spread in layers longitudinally on both sides of the pipe, not exceeding 6 inches in compacted depth, and shall be compacted by rolling parallel with pipe or by mechanical tamping or ramming.					

2.12	Prior to commencing normal filling operations, the crown width of the fill at a height of 12 inches above the top of the pipe shall extend a distance of not less than twice the outside pipe diameter on each side of the pipe or 12 feet, whichever is less.						
2.13	After the backfill has reached at least 12 inches above the top of the pipe, the remainder of the fill shall be placed and thoroughly compacted in layers not exceeding 8 inches. Use select granular material for this entire region of backfill for flexible pipe installations.						
2.14	Under paved roads, streets, parking areas, and similar use pavements including adjacent shoulder areas, the density shall be not less than 90 percent of maximum density for cohesive material and 95 percent of maximum density for cohesionless material, up to the elevation where requirements for pavement subgrade materials and compaction shall control.						
2.15	Under unpaved or turfed traffic areas, density shall not be less than 90 percent of maximum density for cohesive material and 95 percent of maximum density for cohesionless material.						
2.16	Under nontraffic areas, density shall be not less than that of the surrounding material.						
2.17	Watertight joints shall be tested and shall meet test requirements. Rubber gaskets shall comply with the oil resistant gasket requirements of ASTM C443. Certified copies of test results shall be delivered to the District						
2.18	A hydrostatic test shall be made on the watertight joint types as specified. Only one sample joint for each run of pipe of each type and size needs testing; however, if the sample joint fails because of faulty design or workmanship, an additional sample joint may be tested.						
2.19	Lines shall be tested for leakage by low pressure air or water testing or exfiltration tests, as appropriate, prior to completing backfill.						
2.20	Perform a minimum of one (1) test per run of pipe. Laboratory tests for moisture-density relations shall be made in accordance with ASTM D1557 except that mechanical tampers may be used provided the results are correlated with those obtained with the specified hand tamper. Field density tests shall be determined in accordance with ASTM D2167 or ASTM D6938.						
2.21	Conduct deflection test no sooner than 30 days after completion of final backfill and compaction testing as specified.						
2.22	Inspect pipe interior with laser profiling equipment as specified.						
2.23	Pass the mandrel through each run of pipe by pulling it by hand as specified.						
2.24	Inspect 100 percent of all pipe systems under the travel lanes. Random inspections of the remaining pipe system outside of the travel lanes shall represent at least 10 percent of the total pipe footage of each pipe size. Inspections shall be made, depending on the pipe size, with videocamera or visual observations.						

2.25	For flexible pipe installations, perform deflection testing on 100 percent of all pipes under the travel lanes, including curb and gutter, with either a laser profiler or 9-fin mandrel. For flexible pipe, random deflection inspections of the pipe system outside of the travel lanes shall represent at least 10 percent of the total pipe footage of each pipe size.					
2.26	When mandrels are utilized to verify deflection of flexible pipe products during the final post installation inspection, the District will verify the mandrel OD through the use of proving rings.					

IF ANY OF THE ABOVE REQUIREMENTS WERE MARKED NO, EXPLAIN:

3	POST-CONSTRUCTION INSPECTIONS	NA	QC REP (INITIALS	DATE	QC REP (INITIALS	DATE
3.1	Has the Final Punch List been completed and provided to the District for this DFOW?					
3.2	Has the Pre-Final Punch List been completed and submitted for this DFOW?					
3.3	Has the Final Follow-up Control Phase Inspection been performed for this DFOW?					
3.4	Has the Final Acceptance Inspection been performed for this DFOW?					
3.5	Have all asbuilts been recorded for this DFOW?					
3.6	WARRANTY: Has the warranty met the requirements specified in Section 01 61 03 EQUIPMENT AND MATERIALS?					

IF ANY OF THE ABOVE REQUIREMENTS WERE MARKED NO, EXPLAIN:

CONTRACTOR'S QC REPRESENTATIVE'S SIGNATURE	DATE	DISTRICT'S QA REPRESENTATIVE'S SIGNATURE	DATE

DFOW INSPECTION REPORT

PROJECT NAME: C-43 WEST BASIN STORAGE RESERVOIR
CONTRACT NUMBER: CN XXXXXXXXX
PACKAGE 4 - CIVIL WORKS

DEFINEABLE FEATURE OF WORK:	RIPRAP		
PRIME CONTRACTOR:		**DATE:**	
PRIME CONTRACTOR SUPERVISOR:			
QUALITY CONTROL SYSTEMS MANAGER:			
QC SPECIALIST:			
SUBCONTRACTOR:			
ACTIVITY:			
ACTIVITY LOCATION:			
ACTIVITY SPECIFICATIONS:	35 31 19, 31 05 19		

1	PRE-CONSTRUCTION INSPECTIONS	NA	QC REP (INITIALS	DATE	QC REP (INITIALS	DATE
1.1	Have the DFOW specifications and drawings been reviewed with the understanding of specified requirements?					
1.2	Have the CQCP and AHA been reviewed with the comprehension and awareness of their Requirements?					
1.3	Have all pre-construction submittals and work plans been approved for this DFOW by the District?					
1.4	Have all RFIs been answered, reviewed and understood by the appropriate CQC Staff, Superintendant and required subcontractor?					
1.5	Has previous work been completed to enable this DFOW to begin without covering up non-compliance work?					
1.6	Has any and all preliminary work been completed in order to begin work for this DFOW?					
1.7	Have all as-builts been recorded from previous DFOW?					
1.8	Materials: Do all materials and equipment conform to the specification?					
1.9	Have all materials and equipment been handled and stored in accordance with the project specifications and the manufacturer's recommendations of requirements?					
1.10	Has the contractor received all required written approvals by the District to begin work for this DFOW?					
1.11	Has the Preparatory Control Phase Inspection been performed and properly documented for this DFOW?					

IF ANY OF THE ABOVE REQUIREMENTS WERE MARKED NO, EXPLAIN:

2	CONSTRUCTION INSPECTIONS	NA	QC REP (INITIALS	DATE	QC REP (INITIALS	DATE
2.1	Has the Initial Control Phase Inspection been performed for this DFOW?					
2.2	Are the DQCRs and Daily Safety Reports current and complete with the correct information documenting this DFOW?					
2.3	DEMONSTRATION SECTION- Has the contractor constructed a section of riprap protection consisting of geotextile material, bedding stone and riprap to demonstrate proposed operations for production placement as specified in section 35 31 19, 3.1?					
2.4	Methods and Equipment- Has the contractor employed methods and equipment for placement demonstrating the adequacy for use in placement of geotextile material, bedding stone and riprap conforming with the requirements specified? Have the quantities of all materials placed within the section been accurately tabulated and provided to the District for comparison with computed quantities?					
2.5	Demonstration Section Evaluation- Has the contractor received approval of the demonstration section from the District? (Do not proceed with placing riprap protection prior to the approval of the demonstration section.)					
2.6	Removal of Demonstration Section- If removal of the demonstration section is required, has the contractor conducted it in such a manner as to maintain the integrity of the underlying subgrade?					
2.7	BASE PREPARATION- Has the base preparation adhered to section 35 31 19, 3.2?					
2.8	GEOTEXTILE Subgrade Preparation- Has the contractor performed the subgrade preparation as specified in section 31 05 19, 3.2.1?					
2.9	GEOTEXTILE Placement- Has the contractor placed the geotextile in accordance with section 31 05 19, 3.2.2?					
2.10	GEOTEXTILE Seams- Have factory and field seams been sewn in accordance with section 31 05 19, 3.3?					
2.11	GEOTEXTILE Protection- Has the contractor protected the geotextile during installation from clogging, tears, and othe damage, using adequate ballast (e.g. sand bags) to prevent uplift by wind? (Damaged geotextile shall be repaired or replaced as directed.)					
2.12	GEOTEXTILE Repairs- Has the contractor repaired torn or damaged geotextile in accordance with section 31 05 19, 3.5?					
2.13	GEOTEXTILE Penetrations- Has the contractor constructed engineered penetrations of the geotextile by methods recommended by the geotextile Manufacturer?					
2.14	GEOTEXTILE Covering- Has the District inspected and approved the placed geotextile before covering with ballast (riprap)? (Do not cover geotextile prior to inspection and approval by the District.)					
2.15	GEOTEXTILE Covering- Has the covering been placed in accordance with section 31 05 19, 3.7?					
2.16	PLACEMENT OF RIPRAP- Has the contractor placed riprap in accordance with section 35 31 19, 3.5?					
2.17	MAINTENANCE- Has the contractor maintained the riprap until accepted by the District? (The contractor shall replace riprap displaced by any cause prior to acceptance.)					

2.18	RIPRAP GRADATION TEST- Has the contractor performed riprap gradation test in accordance with section 35 31 16, 3.7?					

IF ANY OF THE ABOVE REQUIREMENTS WERE MARKED NO, EXPLAIN:

3	POST-CONSTRUCTION INSPECTIONS	NA	QC REP (INITIALS	DATE	QC REP (INITIALS	DATE
3.1	Has the Final Punch List been completed and provided to the District for this DFOW?					
3.2	Has the Pre-Final Punch List been completed and submitted for this DFOW?					
3.3	Has the Final Follow-up Control Phase Inspection been performed for this DFOW?					
3.4	Has the Final Acceptance Inspection been performed for this DFOW?					
3.5	Have all asbuilts been recorded for this DFOW?					
3.6	WARRANTY: Has the warranty met the requirements specified in Section 01 61 03 EQUIPMENT AND MATERIALS?					

IF ANY OF THE ABOVE REQUIREMENTS WERE MARKED NO, EXPLAIN:

CONTRACTOR'S QC REPRESENTATIVE'S SIGNATURE	DATE	DISTRICT'S QA REPRESENTATIVE'S SIGNATURE	DATE

DFOW INSPECTION REPORT

PROJECT NAME: C-43 WEST BASIN STORAGE RESERVOIR
CONTRACT NUMBER: CN XXXXXXXXX
PACKAGE 4 - CIVIL WORKS

DEFINEABLE FEATURE OF WORK:	REVETMENT		
PRIME CONTRACTOR:		**DATE:**	
PRIME CONTRACTOR SUPERVISOR:			
QUALITY CONTROL SYSTEMS MANAGER:			
QC SPECIALIST:			
SUBCONTRACTOR:			
ACTIVITY:			
ACTIVITY LOCATION:			
ACTIVITY SPECIFICATIONS:	35 31 19.20 & 31 05 19		

1	PRE-CONSTRUCTION INSPECTIONS	NA	QC REP (INITIALS	DATE	QC REP (INITIALS	DATE
1.1	Have the DFOW specifications and drawings been reviewed with the understanding of specified requirements?					
1.2	Have the CQCP and AHA been reviewed with the comprehension and awareness of their Requirements?					
1.3	Have all pre-construction submittals and work plans been approved for this DFOW by the District?					
1.4	Have all RFIs been answered, reviewed and understood by the appropriate CQC Staff, Superintendant and required subcontractor?					
1.5	Has previous work been completed to enable this DFOW to begin without covering up non-compliance work?					
1.6	Has any and all preliminary work been completed in order to begin work for this DFOW?					
1.7	Have all as-builts been recorded from previous DFOW?					
1.8	Materials: Do all materials and equipment conform to the specification?					
1.9	Have all materials and equipment been handled and stored in accordance with the project specifications and the manufacturer's recommendations of requirements?					
1.10	Has the contractor received all required written approvals by the District to begin work for this DFOW?					
1.11	Has the Preparatory Control Phase Inspection been performed and properly documented for this DFOW?					

IF ANY OF THE ABOVE REQUIREMENTS WERE MARKED NO, EXPLAIN:

2	CONSTRUCTION INSPECTIONS	NA	QC REP (INITIALS	DATE	QC REP (INITIALS	DATE
2.1	Has the Initial Control Phase Inspection been performed for this DFOW?					
2.2	Are the DQCRs and Daily Safety Reports current and complete with the correct information documenting this DFOW?					
2.3	SUBGRADE PREPARATION- Has the subgrade to receive ACB revetment been cleared and graded as specified in section 35 31 19.20, 3.1.1 and 3.1.2?					
2.4	SUBGRADE PREPARATION- Have the soils to receive ACM revetment been compacted and finished as specified in section 35 31 19.20, 3.1.3?					
2.5	SUBGRADE PREPARATION- Are the grade tolerances, before accepting geotextile, withing 2" from the prescribed elevations, with no abrupt variations that would cause unacceptable projections of individual blocks as specified in section 35 31 19.20, 3.1.4?					
2.6	SUBGRADE PREPARATION- Has the contractor maintained a smooth condition and corrected the subgrade between installation of the geotextile and the blocks from windrows, stones, clods of cohesive soil, irregularities, ruts, rills and gullies, precipitation runoff, groundwater seepage, etc.?					
2.7	GEOTEXTILE- Has the geotextile met all of the testing requirements as specified in the work plans and specifications?					
2.8	GEOTEXTILE INSTALLATION- Has the geotextile been installed, as specified in section 35 31 19.20, 3.2.1 and 3.2.2?					
2.9	BLOCKS- Have the ACBs been sampled and tested for compressive strength, water absorption and unit weight at a frequency of 3 specimens for each 3,000 square yards?					
2.10	Placement of Pre-Assembled Mattresses- Has the contractor placed the pre-assembled mattresses with mattresses attached to a spreader bar to aid in lifting, aligning and placing the mattresses and adhering to section 35 31 19.20, 3.3.1?					
2.11	Hand Placement of Interlocking Blocks- Has the contractor spaced hand placed blocks to maximize the ACB ability to articulate and adhering to section 35 31 19.20, 3.3.2?					
2.12	Tolerances- Are maximum block projections (vertical offset from adjacent blocks) for "installation in the dry" within 0.5 inches for interlocking blocks and 1.0 inch for cabled systems as specified in section 35 31 19.20, 3.3.3?					
2.13	CONCRETE JOINTS- Are the use of cast in place concrete joints minimized to the extent practicable and has the District been informed of all concrete joints not shown on shop drawings prior to field placement and in accordance with section 35 31 19.20, 3.4.1?					
2.14	Abutments- Do the ACBs abut pipe outlets, retaining walls, flood walls, head walls, sidewalks, and other abutments in a neat appearance?					
2.15	Abutments- Unless a specific detail is indicated on the drawings, are voids filled with partial blocks and the gap filled with cast-in-place concrete?					
2.16	VOID FILLER- Are the voids of the articulating concrete block mats filled with aggregate void filler and all cable ties and anchoring completed prior to filling voids?					

2.17	PROTECTION OF WORK- Has the work been protected against damage from subsequent operations as specified in section 35 31 19.20, 3.6?					

IF ANY OF THE ABOVE REQUIREMENTS WERE MARKED NO, EXPLAIN:

3	POST-CONSTRUCTION INSPECTIONS	NA	QC REP (INITIALS	DATE	QC REP (INITIALS	DATE
3.1	Has the Final Punch List been completed and provided to the District for this DFOW?					
3.2	Has the Pre-Final Punch List been completed and submitted for this DFOW?					
3.3	Has the Final Follow-up Control Phase Inspection been performed for this DFOW?					
3.4	Has the Final Acceptance Inspection been performed for this DFOW?					
3.5	Have all asbuilts been recorded for this DFOW?					
3.6	WARRANTY: Has the warranty met the requirements specified in Section 01 61 03 EQUIPMENT AND MATERIALS?					

IF ANY OF THE ABOVE REQUIREMENTS WERE MARKED NO, EXPLAIN:

CONTRACTOR'S QC REPRESENTATIVE'S SIGNATURE	DATE	DISTRICT'S QA REPRESENTATIVE'S SIGNATURE	DATE

DFOW INSPECTION REPORT

PROJECT NAME: C-43 WEST BASIN STORAGE RESERVOIR
CONTRACT NUMBER: CN XXXXXXXXX
PACKAGE 4 - CIVIL WORKS

DEFINEABLE FEATURE OF WORK:	RECREACTION FEATURES - CAST IN PLACE CONCRETE FOR CIVIL WORKS		
PRIME CONTRACTOR:		**DATE:**	
PRIME CONTRACTOR SUPERVISOR:			
QUALITY CONTROL SYSTEMS MANAGER:			
QC SPECIALIST:			
SUBCONTRACTOR:			
ACTIVITY:			
ACTIVITY LOCATION:			
ACTIVITY SPECIFICATIONS:	03 31 01.00 10		

1	PRE-CONSTRUCTION INSPECTIONS	NA	QC REP (INITIALS	DATE	QC REP (INITIALS	DATE
1.1	Have the DFOW specifications and drawings been reviewed with the understanding of specified requirements?					
1.2	Have the CQCP and AHA been reviewed with the comprehension and awareness of their Requirements?					
1.3	Have all pre-construction submittals and work plans been approved for this DFOW by the District?					
1.4	Have all RFIs been answered, reviewed and understood by the appropriate CQC Staff, Superintendant and required subcontractor?					
1.5	Has previous work been completed to enable this DFOW to begin without covering up non-compliance work?					
1.6	Has any and all preliminary work been completed in order to begin work for this DFOW?					
1.7	Have all as-builts been recorded from previous DFOW?					
1.8	Materials: Do all materials and equipment conform to the specification?					
1.9	Have all materials and equipment been handled and stored in accordance with the project specifications and the manufacturer's recommendations of requirements?					
1.10	Has the contractor received all required written approvals by the District to begin work for this DFOW?					
1.11	Has the Preparatory Control Phase Inspection been performed and properly documented for this DFOW?					

IF ANY OF THE ABOVE REQUIREMENTS WERE MARKED NO, EXPLAIN:

2	CONSTRUCTION INSPECTIONS	NA	QC REP (INITIALS	DATE	QC REP (INITIALS	DATE
2.1	Has the Initial Control Phase Inspection been performed for this DFOW?					
2.2	Are the DQCRs and Daily Safety Reports current and complete with the correct information documenting this DFOW?					
2.3	PREPARATION FOR PLACING- Embedded Items: Has the contractor ensured that all beeded items conform to section 03 31 01.00 10, 3.1.1 Embedded items?					
2.4	PREPARATION FOR PLACING- Concrete on Earth Foundations: Has the contractor placed concrete on Earth surfaces in accordance with section 03 31 01.00 10, 3.1.2 Concrete on Earth Foundations?					
2.5	PREPARATION FOR PLACING- Concrete on Rock Foundations: Has the contractor placed concrete on rock foundations in accordance with section 03 31 01.00 10, 3.1.3 Concrete on Rock Foundations?					
2.6	PREPARATION FOR PLACING- Construction Joint Treatment: Has the contractor adhered to section 03 31 01.00 10, 3.1.4 Construction Joint Treatment, including Joint Preparation, Air-Water Cutting, High-Pressure Water Jet, Wet Sandblasting and Waste Disposal?					
2.7	PREPARATION FOR PLACING- Pre-pour Inspection: Has the contractor and the District completed the pre-pour inspections and documented on the Pre-Pour Inspection form before pouring any concrete?					
2.8	CONVEYING AND PLACING CONCRETE- Has the contractor conveyed and placed concrete in accordance with ACI 301, Section 5 and in accordance with section 03 31 01.00 10 3.2 Conveying and Placing Concrete? (Do not reconstitute concrete that has begun to solidify.)					
2.9	TAMPING AND VIBRATING- Has the contractor performed tamping and vibrating of installed concrete in accordance with section 03 31 01.00 10, 3.3 TAMPING AND VIBRATING?					
2.10	SETTING BASE PLATES AND BEARING PLATES- Setting of Plates: After being plumbed and properly positioned, has the contractor provided column base plates, bearing plates for beams and similar structural members, and machinery and equipment base plates with full bearing with nonshrink grout in accordance with section 03 31 01.00 10, 3.4 SETTING BASE PLATES AND BEARING PLATES?					
2.11	Testing and Inspection- Fine Aggregate Grading: At least once during each shift when the concrete plant is operating, has the contractor performed one sieve analysis and fineness modulus determination in accordance with ASTM C136/C136M and COE CRD-C 104 for the fine aggregate or for each size range of fine aggregate if it is batched in more than one size or classification? (See section 03 31 01.00 10, 3.5.2.1.2 Corrective Action for Fine Aggregate Grading.)					

2.12	Testing and Inspection- Fine Aggregate Moisture Content Testing: When the electric moisture meter is operating satisfactorily, has the contractor made at least two direct measurements of moisture content per week to check the calibration of the meter? (Use the results of tests for moisture content to adjust the added water in the control of the batch plant.)						
2.13	Testing and Inspection- Fine Aggregate Moisture Content Testing: When in the opinion of the District the electric moisture meter is not operating satisfactorily, has the contractor performed at least four tests for moisture content in accordance with ASTM C566 during each 8-hour period of mixing plant operation in accordance with section 03 31 01.00 10, 3.5.2.1.3 Moisture Content Testing? (See section 03 31 01.00 10, 3.5.2.1.3 for Moisture Content Corrective Action.)						
2.14	Testing and Inspection- Coarse Aggregate Grading: At least once during each shift in which the concrete plant is operating, has the contractor conducted a sieve analysis in accordance with ASTM C136/C136M for each size of coarse aggregate? (See section 03 31 01.00 10, 3.5.2.2.3 for Corrective Action for Grading.)						
2.15	Testing and Inspection- Coarse Aggregate Moisture Content: Has the contractor made a test for moisture content of each size group of coarse aggregate at least twice per week? (See section 03 31 01.00 10, 3.5.2.2.4 Coarse Aggregate Moisture Corrective Action.)						
2.16	Testing and Inspection- Quality of Aggregates: Has the contractor submit aggregate quality tests at least 30 days prior to start of concrete placement?						
2.17	Testing and Inspection- Frequency of Quality Tests: In addition to the tests 30 days prior to start of concrete placement and after the start of concrete placement, has the contractor performed tests for aggregate quality in accordance with the frequency schedule shown in section 03 31 01.00 10, 3.5.2.3.1 Frequency of Quality Tests? (See section 03 31 01.00 10, 3.5.2.3.2 Corrective Action for Aggregate Quality.)						
2.18	Testing and Inspection- Scales Weighing Accuracy: Has the contractor checked the accuracy of the scales by test weights prior to start of concrete operations and at least once every 3 months for conformance in accordance with section 03 31 01.00 10, 3.5.2.4.1 Scales Weighing Accuracy?						
2.19	Testing and Inspection- Scales Batching and Recording Accuracy: Has the contractor, once a week, checked the accuracy of each batching and recording device during a weighing operation in accordance with 03 31 01.00 10, 3.5.2.4.2 Scales Batching and Recording Accuracy? ((See section 03 31 01.00 10, 3.5.2.4.3 Scales Corrective Action.)						
2.20	Testing and Inspection- Batch-Plant Control: Has the contractor continuously controlled the measurement of all constituent materials including cementitious materials, each size of aggregate, water, and admixtures in accordance with section 03 31 01.00 10, 3.5.2.5 Batch-Plant Control?						

2.21	Testing and Inspection- Air Content Testing: Has the contractor conducted air content tests when test specimens are fabricated in accordance with section 03 31 01.00 10, 3.5.2.6.1 Air Content Testing? (See section 03 31 01.00 10, 3.5.2.6.2 Corrective Action for Air Content Corrective Action.)						
2.22	Testing and Inspection- Slump Testing: In addition to slump tests made when test specimens are fabricated, has the contractor made at least four slump tests on randomly selected batches in accordance with ASTM C143/C143M and section 03 31 01.00 10, 3.5.2.6.3 Slump Testing? (See section 03 31 01.00 10, 3.5.2.6.4 Slump Corrective Action.)						
2.23	Testing and Inspection- Temperature: Has the contractor measured the temperature of the concrete when compressive strength specimens are fabricated in accordance with ASTM C1064/C1064M?						
2.24	Testing and Inspection- Compressive-Strength Specimens: Has the contractor obtained 6 comprehensive strength specimens for every 100 cubic yards of concrete placed in the same day, sampling in accordance with ASTM C172/C172M, preparing concrete test specimens in accordance with ASTM C31/C31M, and performing compressive strength testing in accordance with ASTM C39/C39M (2 tested at 7 days, 2 tested at 28 days and 2 cylinders held in reserve)?						

IF ANY OF THE ABOVE REQUIREMENTS WERE MARKED NO, EXPLAIN:

3	POST-CONSTRUCTION INSPECTIONS	NA	QC REP (INITIALS	DATE	QC REP (INITIALS	DATE
3.1	Has the Final Punch List been completed and provided to the District for this DFOW?					
3.2	Has the Pre-Final Punch List been completed and submitted for this DFOW?					
3.3	Has the Final Follow-up Control Phase Inspection been performed for this DFOW?					
3.4	Has the Final Acceptance Inspection been performed for this DFOW?					
3.5	Have all asbuilts been recorded for this DFOW?					
3.6	WARRANTY: Has the warranty met the requirements specified in Section 01 61 03 EQUIPMENT AND MATERIALS?					

IF ANY OF THE ABOVE REQUIREMENTS WERE MARKED NO, EXPLAIN:

CONTRACTOR'S QC REPRESENTATIVE'S SIGNATURE	DATE	DISTRICT'S QA REPRESENTATIVE'S SIGNATURE	DATE

DFOW INSPECTION REPORT

PROJECT NAME: C-43 WEST BASIN STORAGE RESERVOIR
CONTRACT NUMBER: CN XXXXXXXXX
PACKAGE 4 - CIVIL WORKS

DEFINEABLE FEATURE OF WORK:	RECREACTION FEATURES - EXTERIOR SIGNAGE		
PRIME CONTRACTOR:		**DATE:**	
PRIME CONTRACTOR SUPERVISOR:			
QUALITY CONTROL SYSTEMS MANAGER:			
QC SPECIALIST:			
SUBCONTRACTOR:			
ACTIVITY:			
ACTIVITY LOCATION:			
ACTIVITY SPECIFICATIONS:	10 14 00.10		

1	PRE-CONSTRUCTION INSPECTIONS	NA	QC REP (INITIALS	DATE	QC REP (INITIALS	DATE
1.1	Have the DFOW specifications and drawings been reviewed with the understanding of specified requirements?					
1.2	Have the CQCP and AHA been reviewed with the comprehension and awareness of their Requirements?					
1.3	Have all pre-construction submittals and work plans been approved for this DFOW by the District?					
1.4	Have all RFIs been answered, reviewed and understood by the appropriate CQC Staff, Superintendant and required subcontractor?					
1.5	Has previous work been completed to enable this DFOW to begin without covering up non-compliance work?					
1.6	Has any and all preliminary work been completed in order to begin work for this DFOW?					
1.7	Have all as-builts been recorded from previous DFOW?					
1.8	Materials: Do all materials and equipment conform to the specification?					
1.9	Have all materials and equipment been handled and stored in accordance with the project specifications and the manufacturer's recommendations of requirements?					
1.10	Has the contractor received all required written approvals by the District to begin work for this DFOW?					
1.11	Has the Preparatory Control Phase Inspection been performed and properly documented for this DFOW?					

IF ANY OF THE ABOVE REQUIREMENTS WERE MARKED NO, EXPLAIN:

2	CONSTRUCTION INSPECTIONS	NA	QC REP (INITIALS	DATE	QC REP (INITIALS	DATE
2.1	Has the Initial Control Phase Inspection been performed for this DFOW?					
2.2	Are the DQCRs and Daily Safety Reports current and complete with the correct information documenting this DFOW?					
2.3	INSTALLATION- Are signs installed plumb and true and in accordance with the approved manufacturer's instructions at locations as directed by District?					
2.4	INSTALLATION- Are all required blockings installed?					
2.5	INSTALLATION- Are all signs on doors or other surfaces installed only after finishes on such surfaces have been installed?					
2.6	Anchorage- Are all anchorages in accordance with the approved manufacturer's instructions or shown, as specified in section 10 14 00.20, 3.1.1 Anchorage?					
2.7	Protection and Cleaning- Has the contractor protected the work against damage during construction and adjusted hardware and electrical equipment for proper operation, as specified in section 10 14 00.20, 3.1.2 Protection and Cleaning?					

IF ANY OF THE ABOVE REQUIREMENTS WERE MARKED NO, EXPLAIN:

3	POST-CONSTRUCTION INSPECTIONS	NA	QC REP (INITIALS	DATE	QC REP (INITIALS	DATE
3.1	Has the Final Punch List been completed and provided to the District for this DFOW?					
3.2	Has the Pre-Final Punch List been completed and submitted for this DFOW?					
3.3	Has the Final Follow-up Control Phase Inspection been performed for this DFOW?					
3.4	Has the Final Acceptance Inspection been performed for this DFOW?					
3.5	Have all asbuilts been recorded for this DFOW?					
3.6	Has the contractor submitted six copies of maintenance instructions listing routine procedures, repairs, and guides?					
3.7	WARRANTY: Has the warranty met the requirements specified in Section 01 61 03 EQUIPMENT AND MATERIALS?					

IF ANY OF THE ABOVE REQUIREMENTS WERE MARKED NO, EXPLAIN:

CONTRACTOR'S QC REPRESENTATIVE'S SIGNATURE	DATE	DISTRICT'S QA REPRESENTATIVE'S SIGNATURE	DATE

DFOW INSPECTION REPORT

PROJECT NAME: C-43 WEST BASIN STORAGE RESERVOIR
CONTRACT NUMBER: CN XXXXXXXXX
PACKAGE 4 - CIVIL WORKS

DEFINEABLE FEATURE OF WORK:	RECREACTION FEATURES - INFORMATION KIOSK		
PRIME CONTRACTOR:		**DATE:**	
PRIME CONTRACTOR SUPERVISOR:			
QUALITY CONTROL SYSTEMS MANAGER:			
QC SPECIALIST:			
SUBCONTRACTOR:			
ACTIVITY:			
ACTIVITY LOCATION:			
ACTIVITY SPECIFICATIONS:	10 18 00		

1	PRE-CONSTRUCTION INSPECTIONS	NA	QC REP (INITIALS	DATE	QC REP (INITIALS	DATE
1.1	Have the DFOW specifications and drawings been reviewed with the understanding of specified requirements?					
1.2	Have the CQCP and AHA been reviewed with the comprehension and awareness of their Requirements?					
1.3	Have all pre-construction submittals and work plans been approved for this DFOW by the District?					
1.4	Have all RFIs been answered, reviewed and understood by the appropriate CQC Staff, Superintendant and required subcontractor?					
1.5	Has previous work been completed to enable this DFOW to begin without covering up non-compliance work?					
1.6	Has any and all preliminary work been completed in order to begin work for this DFOW?					
1.7	Have all as-builts been recorded from previous DFOW?					
1.8	Materials: Do all materials and equipment conform to the specification?					
1.9	Have all materials and equipment been handled and stored in accordance with the project specifications and the manufacturer's recommendations of requirements?					
1.10	Has the contractor received all required written approvals by the District to begin work for this DFOW?					
1.11	Has the Preparatory Control Phase Inspection been performed and properly documented for this DFOW?					

IF ANY OF THE ABOVE REQUIREMENTS WERE MARKED NO, EXPLAIN:

2	CONSTRUCTION INSPECTIONS	NA	QC REP (INITIALS	DATE	QC REP (INITIALS	DATE
2.1	Has the Initial Control Phase Inspection been performed for this DFOW?					
2.2	Are the DQCRs and Daily Safety Reports current and complete with the correct information documenting this DFOW?					
2.3	Has the contractor constructed all kiosks in accordance with the specifications and the drawings?					
2.4	Has the contractor provided Handicap Accessability in accordance witn the drawings?					
2.5	Has the contractor mounted 2 information boards, provided by the District, per shelter as specified in the drawings?					
2.6	Has the contractor provided concrete as specified in the specifications and the drawings, including 4,000 psi compressive strength, 3" to 5" slump?					
2.7	Has the contractor provided the Standing Seam Metal Roof as specified in the section 07 61 13 and the drawings?					

IF ANY OF THE ABOVE REQUIREMENTS WERE MARKED NO, EXPLAIN:

3	POST-CONSTRUCTION INSPECTIONS	NA	QC REP (INITIALS	DATE	QC REP (INITIALS	DATE
3.1	Has the Final Punch List been completed and provided to the District for this DFOW?					
3.2	Has the Pre-Final Punch List been completed and submitted for this DFOW?					
3.3	Has the Final Follow-up Control Phase Inspection been performed for this DFOW?					
3.4	Has the Final Acceptance Inspection been performed for this DFOW?					
3.5	Have all asbuilts been recorded for this DFOW?					
3.6	WARRANTY: Has the warranty met the requirements specified in Section 01 61 03 EQUIPMENT AND MATERIALS?					

IF ANY OF THE ABOVE REQUIREMENTS WERE MARKED NO, EXPLAIN:

CONTRACTOR'S QC REPRESENTATIVE'S SIGNATURE	DATE	DISTRICT'S QA REPRESENTATIVE'S SIGNATURE	DATE

DFOW INSPECTION REPORT

PROJECT NAME: C-43 WEST BASIN STORAGE RESERVOIR
CONTRACT NUMBER: CN XXXXXXXXX
PACKAGE 4 - CIVIL WORKS

DEFINEABLE FEATURE OF WORK:	RECREACTION FEATURES - PRECAST RESTROOM TOILET		
PRIME CONTRACTOR:		**DATE:**	
PRIME CONTRACTOR SUPERVISOR:			
QUALITY CONTROL SYSTEMS MANAGER:			
QC SPECIALIST:			
SUBCONTRACTOR:			
ACTIVITY:			
ACTIVITY LOCATION:			
ACTIVITY SPECIFICATIONS:	10 21 12		

1	PRE-CONSTRUCTION INSPECTIONS	NA	QC REP (INITIALS	DATE	QC REP (INITIALS	DATE
1.1	Have the DFOW specifications and drawings been reviewed with the understanding of specified requirements?					
1.2	Have the CQCP and AHA been reviewed with the comprehension and awareness of their Requirements?					
1.3	Have all pre-construction submittals and work plans been approved for this DFOW by the District?					
1.4	Have all RFIs been answered, reviewed and understood by the appropriate CQC Staff, Superintendant and required subcontractor?					
1.5	Has previous work been completed to enable this DFOW to begin without covering up non-compliance work?					
1.6	Has any and all preliminary work been completed in order to begin work for this DFOW?					
1.7	Have all as-builts been recorded from previous DFOW?					
1.8	Materials: Do all materials and equipment conform to the specification?					
1.9	Have all materials and equipment been handled and stored in accordance with the project specifications and the manufacturer's recommendations of requirements?					
1.10	Has the contractor received all required written approvals by the District to begin work for this DFOW?					
1.11	Has the Preparatory Control Phase Inspection been performed and properly documented for this DFOW?					

IF ANY OF THE ABOVE REQUIREMENTS WERE MARKED NO, EXPLAIN:

2	CONSTRUCTION INSPECTIONS	NA	QC REP (INITIALS	DATE	QC REP (INITIALS	DATE
2.1	Has the Initial Control Phase Inspection been performed for this DFOW?					
2.2	Are the DQCRs and Daily Safety Reports current and complete with the correct information documenting this DFOW?					
2.3	Mixing and Delivery of Concrete- Has the contractor mixed and delivered the concrete in accordance with ASTM C94/C94M, Section 12.6 through 12.9?					
2.4	Placing and Consolidating Concrete- Except for the self-compacting concrete, has the concrete been consolidated by the use of mechanical vibrators to accomplish compaction but not to the point that segregation occurs?					
2.5	Finishing Concrete- Has the contractor floated and trowelled all interior floor and exterior slabs?					
2.6	Finishing Concrete- Are all exterior building walls and exterior screen walls been textured with split faced block texture?					
2.7	Finishing Concrete- Have all the exterior surfaces of the roof panels been cast to simulate rib metal, hunter green roof with the underside of the overhang having a smooth finish?					
2.8	Cracks and Patching- Have Reject all cracks in concrete components which are judged to affect the structural integrity of the building been rejected?					
2.9	Cracks and Patching- Has the contractor patched small holes, depressions, and air voids with a suitable material, matching the finish and texture of the surrounding surface?					
2.10	Curing and Hardening Concrete- Has the contractor performed curing the concrete as specified?					
2.11	FINISHING AND FABRICATION- Are the Structural Joints finishing and fabrication in accordance with section 10 21 12, 3.2 FINISHING AND FABRICATION?					
2.12	Painting/Staining- Has the painting and staining been performed in accordance with section 10 21 12, 3.2.2 Painting/Staining?					
2.13	Schedule Of Finishes- Have the finishing coatings of the inside concrete surfaces, the exterior concrete surface and the metal surfaces (both inside and out) been performed in accordance with the schedule specified in section 10 21 12, 3.2.3 Schedule Of Finishes?					
2.14	Installation- Location: As indicated on the drawings, has the contractor provided a clear and level site free of overhang and/or underground obstructions, providing access to the site for truck delivery and sufficient area for a crane to install and the equipment to install the restroom?					
2.15	Installation- Excavation - Has the contractor excavated for the installation of the toilet vault to a depth that will allow the structure site to be free draining after installation is completed and allowing for a 2 inch leveling course beneath the toilet vault?					
2.16	Installation- Materials: Is the bedding material No. 57 stone?					

2.17	Installation- Materials: Is the caulking between vault and toilet floor 1 inch x 1 inch Butyl tape designed specifically to bond precast concrete to precast concrete?						
2.18	Installation- Backfill and Compaction: Has the contractor compacted the natural ground at the bottom of the vault excavation to 95% of ASTM D698 maximum density and installed the backfill as specified in section 10 21 12, 3.2.5 d Backfill and Compaction?						
2.19	Installation- Finish Grading: Has the contractor performed the finish grading in accordance with section 10 21 12, 3.2.6 e Finish Grading?						
2.20	Installation- Exhaust Pipe Extension: Has the contractor attached the top pipe extension using stainless steel hardware?						
2.21	Installation- At the completion of the installation has the contractor submitted a manufacturer's field report with the manufacturer's certification that the precast restroom(s) have been installed per the manufacturer's recommendation and the approved installation plan?						

IF ANY OF THE ABOVE REQUIREMENTS WERE MARKED NO, EXPLAIN:

3	POST-CONSTRUCTION INSPECTIONS	NA	QC REP (INITIALS	DATE	QC REP (INITIALS	DATE
3.1	Has the Final Punch List been completed and provided to the District for this DFOW?					
3.2	Has the Pre-Final Punch List been completed and submitted for this DFOW?					
3.3	Has the Final Follow-up Control Phase Inspection been performed for this DFOW?					
3.4	Has the Final Acceptance Inspection been performed for this DFOW?					
3.5	Have all asbuilts been recorded for this DFOW?					
3.6	Operation and Maintenance Manuals- Has the contractor submitted operation and maintenance manuals as specified in section 10 21 12, 3.2.6.1 Operation and Maintenance Manuals?					
3.7	Training Course- Has the contractor conducted a training course as specified in 10 21 12, 3.2.6.2 Traing Course?					
3.8	WARRANTY: Has the warranty met the requirements specified in Section 01 61 03 EQUIPMENT AND MATERIALS?					

IF ANY OF THE ABOVE REQUIREMENTS WERE MARKED NO, EXPLAIN:

CONTRACTOR'S QC REPRESENTATIVE'S SIGNATURE	DATE	DISTRICT'S QA REPRESENTATIVE'S SIGNATURE	DATE

DFOW INSPECTION REPORT

PROJECT NAME: C-43 WEST BASIN STORAGE RESERVOIR
CONTRACT NUMBER: CN XXXXXXXXX
PACKAGE 4 - CIVIL WORKS

DEFINEABLE FEATURE OF WORK:	**RECREACTION FEATURES - STANDING SEAM SHEET METAL ROOFING**		
PRIME CONTRACTOR:		**DATE:**	
PRIME CONTRACTOR SUPERVISOR:			
QUALITY CONTROL SYSTEMS MANAGER:			
QC SPECIALIST:			
SUBCONTRACTOR:			
ACTIVITY:			
ACTIVITY LOCATION:			
ACTIVITY SPECIFICATIONS:	**07 61 13**		

1	PRE-CONSTRUCTION INSPECTIONS	NA	QC REP (INITIALS	DATE	QC REP (INITIALS	DATE
1.1	Have the DFOW specifications and drawings been reviewed with the understanding of specified requirements?					
1.2	Have the CQCP and AHA been reviewed with the comprehension and awareness of their Requirements?					
1.3	Have all pre-construction submittals and work plans been approved for this DFOW by the District?					
1.4	Have all RFIs been answered, reviewed and understood by the appropriate CQC Staff, Superintendant and required subcontractor?					
1.5	Has previous work been completed to enable this DFOW to begin without covering up non-compliance work?					
1.6	Has any and all preliminary work been completed in order to begin work for this DFOW?					
1.7	Have all as-builts been recorded from previous DFOW?					
1.8	Materials: Do all materials and equipment conform to the specification?					
1.9	Have all materials and equipment been handled and stored in accordance with the project specifications and the manufacturer's recommendations of requirements?					
1.10	Has the contractor received all required written approvals by the District to begin work for this DFOW?					
1.11	Has the Preparatory Control Phase Inspection been performed and properly documented for this DFOW?					

IF ANY OF THE ABOVE REQUIREMENTS WERE MARKED NO, EXPLAIN:

2	CONSTRUCTION INSPECTIONS	NA	QC REP (INITIALS	DATE	QC REP (INITIALS	DATE
2.1	Has the Initial Control Phase Inspection been performed for this DFOW?					
2.2	Are the DQCRs and Daily Safety Reports current and complete with the correct information documenting this DFOW?					
2.3	INSPECTION- Has the contractor examined surfaces to receive metal panels and notified District in writing of any defects? (Starting of Work by Contractor shall constitute acceptance of Work of others as satisfactory.)					
2.4	JOB CONDITIONS- Protection: Has the contractor carefully protected the installed Work against disfiguration, contamination, or damage by mechanical abuse or contact with other harmful materials?					
2.5	JOB CONDITIONS- Protection: Wherever exposure to damage is critical, has the contractor provided protective cover or barriers?					
2.6	INSTALLATION- Has the contractor performed the installation of metal panel system under experienced supervision and in strict accordance with Shop Drawings and in conformance with section 07 61 13, 3.3 Installation?					
2.7	CLEAN UP- After completion of installation, Has the contractor thoroughly cleaned metal components, interior and exterior, exposed surfaces in accordance with metal panel Manufacturer's recommendations and in a manner acceptable to the District?					

IF ANY OF THE ABOVE REQUIREMENTS WERE MARKED NO, EXPLAIN:

3	POST-CONSTRUCTION INSPECTIONS	NA	QC REP (INITIALS	DATE	QC REP (INITIALS	DATE
3.1	Has the Final Punch List been completed and provided to the District for this DFOW?					
3.2	Has the Pre-Final Punch List been completed and submitted for this DFOW?					
3.3	Has the Final Follow-up Control Phase Inspection been performed for this DFOW?					
3.4	Has the Final Acceptance Inspection been performed for this DFOW?					
3.5	Have all asbuilts been recorded for this DFOW?					
3.6	WARRANTY: Has the warranty met the requirements specified in Section 01 61 03 EQUIPMENT AND MATERIALS?					

IF ANY OF THE ABOVE REQUIREMENTS WERE MARKED NO, EXPLAIN:

CONTRACTOR'S QC REPRESENTATIVE'S SIGNATURE	DATE	DISTRICT'S QA REPRESENTATIVE'S SIGNATURE	DATE

DFOW INSPECTION REPORT

PROJECT NAME: C-43 WEST BASIN STORAGE RESERVOIR
CONTRACT NUMBER: CN XXXXXXXXX
PACKAGE 4 - CIVIL WORKS

DEFINEABLE FEATURE OF WORK:	DAM FOUNDATION PREPARATIONS (Subgrade Preparation)		
PRIME CONTRACTOR:		**DATE:**	
PRIME CONTRACTOR SUPERVISOR:			
QUALITY CONTROL SYSTEMS MANAGER:			
QC SPECIALIST:			
SUBCONTRACTOR:			
ACTIVITY:			
ACTIVITY LOCATION:			
ACTIVITY SPECIFICATIONS:	31 23 13		

1	PRE-CONSTRUCTION INSPECTIONS		NA	QC REP (INITIALS	DATE	QC REP (INITIALS	DATE
1.1	Have the DFOW specifications and drawings been reviewed with the understanding of specified requirements?						
1.2	Have the CQCP and AHA been reviewed with the comprehension and awareness of their Requirements?						
1.3	Have all pre-construction submittals and work plans been approved for this DFOW by the District?						
1.4	Have all RFIs been answered, reviewed and understood by the appropriate CQC Staff, Superintendant and required subcontractor?						
1.5	Has previous work been completed to enable this DFOW to begin without covering up non-compliance work?						
1.6	Has any and all preliminary work been completed in order to begin work for this DFOW?						
1.7	Have all as-builts been recorded from previous DFOW?						
1.8	Materials: Do all materials and equipment conform to the specification?						
1.9	Have all materials and equipment been handled and stored in accordance with the project specifications and the manufacturer's recommendations of requirements?						
1.10	Has the contractor received all required written approvals by the District to begin work for this DFOW?						
1.11	Has the contractor provided the services of a Professional Survey Mapper for construction staking and preparation of each segment of foundation soils for foundation mapping?						
1.12	Has the Preparatory Control Phase Inspection been performed and properly documented for this DFOW?						

IF ANY OF THE ABOVE REQUIREMENTS WERE MARKED NO, EXPLAIN:

2	CONSTRUCTION INSPECTIONS	NA	QC REP (INITIALS	DATE	QC REP (INITIALS	DATE
2.1	Has the Initial Control Phase Inspection been performed for this DFOW?					
2.2	Are the DQCRs and Daily Safety Reports current and complete with the correct information documenting this DFOW?					
2.3	EROSION CONTROL- Has the contractor prevented and controlled erosion and water pollution per Florida Department of Environmental Protection (FDEP) regulations and permit conditions with all erosion and sediment control measures in place and the project signage on site prior to beginning any construction?					
2.4	STRIPPING- Has the contractor removed topsoil and all sand with roots and other vegetative matter from the subgrade soils to the limits shown on the Drawings or to the depth required to reach sand subgrade that is free of roots and/or finely divided organic matter?					
2.5	REMOVAL OF BURIED CONDUITS- Has the contractor performed pre-trenching along the lines shown on the Drawings for exploration of and removal of existing buried irrigation and drainage (and all other) conduits within the limits shown on the Drawings?					
2.6	REMOVAL OF BURIED CONDUITS- Has the contractor documented the removal of all conduits using survey control with an accuracy of one foot horizontal and 0.1 foot vertical?					
2.6	REMOVAL OF BURIED CONDUITS- Backfill: Has the contractor backfilled conduit trenches in accordance with Specification 31 00 00, performing In-place Nuclear Density Tests at the rate of 1 per 100 lf of trench backfilled as required by ASTM D 6938?					
2.7	RECLAMATION OF CANALS AND 10TH ROW DITCHES- Excavation: Has the contractor excavated to remove all vegetation, roots, and soft sediments from the existing canals and 10th Row Ditches associated with the former citrus grove in accordance with section 31 23 12, 3.4 RECLAMATION OF CANALS AND 10TH ROW DITCHES?					
2.8	RECLAMATION OF CANALS AND 10TH ROW DITCHES- Backfill: Has the contractor backfilled the inspected and approved excavations with Embankment Fill as described in Specification 31 00 00 and in accordance with section 31 23 13, 3.4 RECLAMATION OF CANALS AND 10TH ROW DITCHES?					
2.9	RECLAMATION OF CANALS AND 10TH ROW DITCHES- Backfill: Has the contractor backfilled 10th Row Ditches in accordance with Specification 31 00 00, performing In-place Nuclear Density Tests at the rate of 1 per 100 lf of ditch backfilled as required by ASTM D 6938?					
2.10	PROOF OF CONCEPT- Has the contractor completed the Proof of Concept as specified in section 31 23 13, 3.5 PROOF OF CONCEPT?					

2.11	PROOF OF CONCEPT- Has the District approved the Proof of Concept as specified in section 31 23 13, 3.5 PROOF OF CONCEPT? (Contractor cannot proceed without a Notice to Proceed by the District.)					
2.12	PREPARED FOUNDATION SOIL SEGMENT- Has the contractor field marked each segment with stakes located 50' on center, with the stakes referenced to the project baseline of stationing?					
2.13	FOUNDATION SOIL MAPPING- Has the contractor given the District 3 days advance notification that a segment is ready for inspection? Has the District completed its inspection of the segment under review with the additional 5 additional days of the segment under review?					
2.14	PREPARED FOUNDATION GRADE STATUS REPORT- Has the contractor submitted written reports on a weekly basis, that summarizes the areas where embankment foundation grades were prepared during the previous week, using project Station-Offset or other agreed upon (by the District) geo-spatial reference system in accordance with section 31 23 12, 3.8 PREPARED FOUNDATION GRADE STATUS REPORT?					

IF ANY OF THE ABOVE REQUIREMENTS WERE MARKED NO, EXPLAIN:

3	POST-CONSTRUCTION INSPECTIONS	NA	QC REP (INITIALS	DATE	QC REP (INITIALS	DATE
3.1	Has the Final Punch List been completed and provided to the District for this DFOW?					
3.2	Has the Pre-Final Punch List been completed and submitted for this DFOW?					
3.3	Has the Final Follow-up Control Phase Inspection been performed for this DFOW?					
3.4	Has the Final Acceptance Inspection been performed for this DFOW?					
3.5	Have all asbuilts been recorded for this DFOW?					
3.6	WARRANTY: Has the warranty met the requirements specified in Section 01 61 03 EQUIPMENT AND MATERIALS?					

IF ANY OF THE ABOVE REQUIREMENTS WERE MARKED NO, EXPLAIN:

CONTRACTOR'S QC REPRESENTATIVE'S SIGNATURE	DATE	DISTRICT'S QA REPRESENTATIVE'S SIGNATURE	DATE

DFOW INSPECTION REPORT

PROJECT NAME: C-43 WEST BASIN STORAGE RESERVOIR
CONTRACT NUMBER: CN XXXXXXXXX
PACKAGE 4 - CIVIL WORKS

DEFINEABLE FEATURE OF WORK:	TEMPORARY GEOTECHNICAL INSTRUMENTATION		
PRIME CONTRACTOR:		**DATE:**	
PRIME CONTRACTOR SUPERVISOR:			
QUALITY CONTROL SYSTEMS MANAGER:			
QC SPECIALIST:			
SUBCONTRACTOR:			
ACTIVITY:			
ACTIVITY LOCATION:			
ACTIVITY SPECIFICATIONS:	31 09 00		

1	PRE-CONSTRUCTION INSPECTIONS	NA	QC REP (INITIALS	DATE	QC REP (INITIALS	DATE
1.1	Have the DFOW specifications and drawings been reviewed with the understanding of specified requirements?					
1.2	Have the CQCP and AHA been reviewed with the comprehension and awareness of their Requirements?					
1.3	Have all pre-construction submittals and work plans been approved for this DFOW by the District?					
1.4	Have all RFIs been answered, reviewed and understood by the appropriate CQC Staff, Superintendant and required subcontractor?					
1.5	Has previous work been completed to enable this DFOW to begin without covering up non-compliance work?					
1.6	Has any and all preliminary work been completed in order to begin work for this DFOW?					
1.7	Have all as-builts been recorded from previous DFOW?					
1.8	Materials: Do all materials and equipment conform to the specification?					
1.9	Have all materials and equipment been handled and stored in accordance with the project specifications and the manufacturer's recommendations of requirements?					
1.10	Has the contractor received all required written approvals by the District to begin work for this DFOW?					
1.11	Certified Water Well Driller- Has the contractor utilized the services of a certified water well driller licensed by the State of Florida for the construction of the piezometers?					
1.12	Geotechnical Engineer- Has the contractor provided the piezometer installation work under the direct supervision of a geotechnical engineer registered in the State of Florida (i.e. licensed Florida P.E.)?					

1.13	Professional Survey Mapper- Has the contractor utilized the services of a Professional Survey Mapper (PSM) for the survey of piezometer, settlement plate and survey monument locations and elevations?						
1.14	Has the Preparatory Control Phase Inspection been performed and properly documented for this DFOW?						

IF ANY OF THE ABOVE REQUIREMENTS WERE MARKED NO, EXPLAIN:

2	CONSTRUCTION INSPECTIONS	NA	QC REP (INITIALS	DATE	QC REP (INITIALS	DATE
2.1	Has the Initial Control Phase Inspection been performed for this DFOW?					
2.2	Are the DQCRs and Daily Safety Reports current and complete with the correct information documenting this DFOW?					
2.3	QUALIFICATIONS- Has the contractor utilized the services of a certified water well driller licensed by the State of Florida for the construction of the piezometers?					
2.4	QUALIFICATIONS- Has the contractor provided the piezometer installation work under the direct supervision of a geotechnical engineer registered in the State of Florida (i.e. licensed Florida P.E.)?					
2.5	QUALIFICATIONS- Has the contractor utilized the services of a Professional Survey Mapper (PSM) for the survey of piezometer, settlement plate and survey monument locations and elevations?					
2.6	PIEZOMETER INSTALLATION- Has the contractor installed, grouted and developed pizometers in accordance with section 31 09 00, 3.1 PIEZOMETER INSTALLATION, approved work plans and drawings?					
2.7	PIEZOMETER COMPLETION REPORTS- Has the contractor submitted reports after installation of each and every piezometer in accordance with section 31 09 00, 3.1.5 PIEZOMETER COMPLETION REPORTS?					
2.8	TEMPORARY PIEZOMETERS- Is each piezometer installed in accordance with the details indicated on the Drawings and section 31 09 00, 3.2 TEMPORARY PIEZOMETERS B?					
2.9	TEMPORARY PIEZOMETERS- In accordance with the piezometer schedules shown on the Drawings and section 31 09 00, 3.2 TEMPORARY PIEZOMETERS C, does each piezometer installation include the construction of clusters with various depths and elevations?					
2.10	TEMPORARY PIEZOMETERS- Has a soil boring been drilled at each Geotechnical Monitoring Station and the lithology logged by a qualified Geotechnical Engineer and in accordance with section 31 09 00, 3.2 TEMPORARY PIEZOMETERS D?					
2.11	TEMPORARY PIEZOMETERS- Are drilling equipment and temporary casing (if any) thoroughly cleaned prior to use?					
2.12	TEMPORARY PIEZOMETERS- Are piezometers (i.e. Geokon Model 4500DP) pushed or driven into the clay strata using the drilling rods and with the cable leads threaded through the drilling rods and in accordance with section 31 09 00, 3.2 TEMPORARY PIEZOMETERS F?					

2.13	TEMPORARY PIEZOMETERS- Are the piezometers installed from the prepared foundation grade to the designated tip elevation and in accordance with section 31 09 00, 3.2 TEMPORARY PIEZOMETERS G?						
2.14	TEMPORARY PIEZOMETERS- Is each vibrating wire piezometer calibrated by the contractor in accordance with the information provided in the Geokon Instruction Manual for Model 4500 Series Vibrating Wire Piezometers?						
2.15	TEMPORARY PIEZOMETERS- Is each Temporary Geotechnical Monitoring station instrumented with a Campbell Scientific CR 6 Data Logger, or equivalent in accordance with section 31 09 00, 3.2 TEMPORARY PIEZOMETERS I?						
2.16	TEMPORARY PIEZOMETERS- Has a Florida registered land surveyor surveyed actual piezometer locations and the ground surface elevation at the piezometer locations within 7 days following installation of the piezometer? Has this certified survey information been submitted to the District?						
2.17	TEMPORARY PIEZOMETERS- Has the ground surface at each piezometer location been leveled to +/- 0.1 feet or better using datum NAVD 1988?						
2.18	TEMPORARY PIEZOMETERS- Has the Contractor installed bollards around each Data Logger as shown on the Drawings, painted with fluorescent yellow paint and maintained? (Contractor is responsible for repairing or replacing any Data Loggers and associated cable leads damaged by it.)						
2.19	TEMPORARY PIEZOMETERS- Piezometer Tip Elevations are shown on the Instrumentation Elevation Schedule shown on the Drawings. Has the contractor modified these tip elevations as appropriate based upon the results of the specific SPT boring drilled for each Monitoring Station?						
2.20	TEMPORARY PIEZOMETERS- Has the contractor monitored the pore pressures developed in the piezometers during fill placement and Waiting Periods, and provide the data to the DISTRICT in Excel file format at a frequency of once per week and programmed to read at a frequency of once per day?						
2.21	SETTLEMENT PLATES- Has the contractor prepared the foundation grades in a coordinated effort with installation of the settlement plates and conformed to section 31 09 00, 3.3 SETTLEMENT PLATES A?						
2.22	SETTLEMENT PLATES- Has the contractor placed the settlement plate and the initial length of iron riser pipe in the excavation ensuring that the bottom of the plate is in full bearing on the foundation soils, and that the initial length of riser pipe is plumb and conforms to section 31 09 00, 3.3 SETTLEMENT PLATES B?						
2.23	SETTLEMENT PLATES- Has the contractor, as the embankment fill is placed, added additional riser pipes and casings as needed to maintain top of riser and casing elevations above the level of the fill and conformed to section 31 09 00, 3.3 SETTLEMENT PLATES C?						
2.24	SETTLEMENT PLATES- Has the contractor provided for the services of a PSM to determine the locations of the settlement plates with a horizontal accuracy within one foot and conformed to section 31 09 00, 3.3 SETTLEMENT PLATES D?						

2.25	SETTLEMENT PLATES- Has the Contractor provided a PSM to determine the elevation of the top of the riser pipe as the fill materials are placed and conformed to section 31 09 00, 3.3 SETTLEMENT PLATES E?					
2.26	SETTLEMENT PLATES- The Contractor PSM shall record field survey data in a standard format within field books, and shall provide survey data on a weekly basis to the District using an Excel file format and as specified in section 31 09 00, 3.3 SETTLEMENT PLATES F?					
2.27	SETTLEMENT PLATES- Has the measurement of the settlement plate riser pipes been made weekly during the Waiting Periods?					
2.28	SETTLEMENT PLATES- Has the contractor taken precautions necessary to keep the settlement plate riser pipes and casings in a vertical position at all times during the life of this Contract and in accordance with section 31 09 00, 3.3 SETTLEMENT PLATES I?					

IF ANY OF THE ABOVE REQUIREMENTS WERE MARKED NO, EXPLAIN:

3	POST-CONSTRUCTION INSPECTIONS	NA	QC REP (INITIALS	DATE	QC REP (INITIALS	DATE
3.1	Has the Final Punch List been completed and provided to the District for this DFOW?					
3.2	Has the Pre-Final Punch List been completed and submitted for this DFOW?					
3.3	Has the Final Follow-up Control Phase Inspection been performed for this DFOW?					
3.4	Has the Final Acceptance Inspection been performed for this DFOW?					
3.5	Have all asbuilts been recorded for this DFOW?					
3.6	WARRANTY: Has the warranty met the requirements specified in Section 01 61 03 EQUIPMENT AND MATERIALS?					

IF ANY OF THE ABOVE REQUIREMENTS WERE MARKED NO, EXPLAIN:

CONTRACTOR'S QC REPRESENTATIVE'S SIGNATURE	DATE	DISTRICT'S QA REPRESENTATIVE'S SIGNATURE	DATE

DFOW INSPECTION REPORT

PROJECT NAME: C-43 WEST BASIN STORAGE RESERVOIR
CONTRACT NUMBER: CN XXXXXXXXX
PACKAGE 4 - CIVIL WORKS

DEFINEABLE FEATURE OF WORK:	**EARTHWORK (Dam Embankment Fill, Select Fill, Bentonite Amended Soil, Gap Closures)**		
PRIME CONTRACTOR:		**DATE:**	
PRIME CONTRACTOR SUPERVISOR:			
QUALITY CONTROL SYSTEMS MANAGER:			
QC SPECIALIST:			
SUBCONTRACTOR:			
ACTIVITY:			
ACTIVITY LOCATION:			
ACTIVITY SPECIFICATIONS:			

1	PRE-CONSTRUCTION INSPECTIONS	NA	QC REP (INITIALS	DATE	QC REP (INITIALS	DATE
1.1	Have the DFOW specifications and drawings been reviewed with the understanding of specified requirements?					
1.2	Have the CQCP and AHA been reviewed with the comprehension and awareness of their Requirements?					
1.3	Have all pre-construction submittals and work plans been approved for this DFOW by the District?					
1.4	Have all RFIs been answered, reviewed and understood by the appropriate CQC Staff, Superintendant and required subcontractor?					
1.5	Has previous work been completed to enable this DFOW to begin without covering up non-compliance work?					
1.6	Has any and all preliminary work been completed in order to begin work for this DFOW?					
1.7	Have all as-builts been recorded from previous DFOW?					
1.8	Materials: Do all materials and equipment conform to the specification?					
1.9	Have all materials and equipment been handled and stored in accordance with the project specifications and the manufacturer's recommendations of requirements?					
1.10	Has the contractor received all required written approvals by the District to begin work for this DFOW?					
1.11	Has the Preparatory Control Phase Inspection been performed and properly documented for this DFOW?					

IF ANY OF THE ABOVE REQUIREMENTS WERE MARKED NO, EXPLAIN:

2	CONSTRUCTION INSPECTIONS	NA	QC REP (INITIALS	DATE	QC REP (INITIALS	DATE
2.1	Has the Initial Control Phase Inspection been performed for this DFOW?					
2.2	Are the DQCRs and Daily Safety Reports current and complete with the correct information documenting this DFOW?					
2.3	During construction, perform excavation and fill in a manner and sequence that will provide proper drainage at all times.					
2.4	Each stockpile of material is to be qualified in writing by the Contractor, with supporting laboratory testing documentation, and approved by the District prior to placement in the embankment.					
2.5	Make excavations to the lines, grades, and elevations shown on the Drawings. The District shall have authority to direct changes to excavation limits.					
2.6	The Contractor shall manage site surface water during construction to keep soil materials sufficiently dry.					
2.7	When working platforms for equipment operation and support for subsequent construction features become unstable due to excess moisture, remove unstable material to 12 inches deep or the depth required based upon field conditions existing at the time of removal, and provide new soil material as specified herein.					
2.8	Control groundwater flowing toward or into excavations to prevent sloughing of excavation slopes and walls, boils, uplift and heave in the excavation and to eliminate interference with orderly progress of construction.					
2.9	While the excavation is open, maintain the water level continuously at least 3 feet below the working level.					
2.10	Remove stones of 1 inch or greater in any dimension, or as recommended by the pipe manufacturer, whichever is smaller, to avoid point bearing.					
2.11	Where rock is encountered in the bottom of the trench, remove such material 6 inches below the required grade and replaced with suitable materials as provided in paragraph EMBANKMENT FILLING AND COMPACTION.					
2.12	Where unstable material is encountered in the bottom of the trench, remove such material to a depth of at least 12 inches, for the full width of the bottom of the excavation or 3 feet, whichever is larger, and replace it to the proper grade with Embankment Fill material as provided in paragraph EMBANKMENT FILLING AND COMPACTION.					
2.13	Remove loose rock. When concrete or masonry is to be placed in an excavated area, take special care not to disturb the bottom of the excavation. Do not excavate to the final grade level until just before the concrete or masonry is to be placed.					
2.14	If the Contractor fails to protect the stockpiles and any material becomes unsuitable for its intended use, remove and replace such material with satisfactory material from approved sources at no cost to the District.					

2.15	Place Embankment Fill, Clean Sand, or Filter Sand in successive horizontal layers of loose material not more than 12 inches in depth. Lift thickness for Select Fill materials shall be not more than 8 inches in depth.						
2.16	Embankment Fill materials having Unified Soil Classification System (ASTM D2487) Group Symbols of SC and/or SM shall not be placed within 10 feet (measured horizontally) from the finished earth slopes of the dam.						
2.17	All Embankment Fill material must be within the range of -3 to +3 percent of optimum moisture content at the time of compaction, and must be compacted to at least 95 percent of the maximum dry density determined in accordance with Modified Proctor (ASTM D1557).						
2.18	All Select Fill material must be within the range of -1 to +2 percent of optimum moisture content at the time of compaction, and must be compacted to at least 98 percent of the maximum dry density determined in accordance with Standard Proctor (ASTM D698).						
2.19	Clean Sand and Filter Sand materials are to be compacted to not less than 80 percent Relative Compaction determined in accordance with ASTM D4253.						
2.20	At the beginning of each work day, the previously placed and compacted earth lift shall be scarified to a depth not less than 6 inches, and the scarified surface shall be moisture conditioned to meet the specification requirements.						
2.21	The initial lift of fill for each work day shall be 6 inches thick. Subsequent lifts shall be no greater than 12 inches thick (8 inches for Select Fill), and the surface of subsequent lifts shall be scarified to a depth of 3 inches to promote bonding between lifts.						
2.22	Construction of the dam above elevation +47 feet cannot resume until the foundation soils have reached at least 90 percent consolidation as determined by the temporary geotechnical instrumentation.						
2.23	Construction of the soil-cement cannot commence until the temporary geotechnical instrumentation shows that the foundation soils have achieved 90 percent or more consolidation after the dam reaches elevation +54 feet.						
2.24	The Contractor shall submit the document, Determination of Waiting Period Duration, for each reach of the dam shown on the Drawings entitled Temporary Geotechnical Instrumentation. This document is to be prepared by and signed and sealed by the Contractor's Geotechnical Engineer						
2.25	Provide the degree of finish for graded areas within 0.1 foot of the grades and elevations indicated except that the degree of finish for subgrades specified in paragraph SUBGRADE PREPARATION.						
2.26	Determine field in-place density in accordance with ASTM D6938 and ASTM D2937. Establish calibration curves for each nuclear gauge using the results from ASTM D6938 and ASTM D1556/D1556M. Adjust results from the nuclear gauge using the calibration curve. Use the Drive Cylinder Method (ASTM D2937) only for soft, fine-grained, cohesive soils.	112V					

2.27	When test results indicate that compaction is not as specified, remove the material, replace and recompact to meet specification requirements.					
2.28	Material Type Location of Material Test Frequency Embankment Fill - Dams and Adjacent to Structures - 1 test per 1,000 cubic yards. Select Fill - Dams and Adjacent to Structures - 1 test per 500 cubic yards. Clean Sand - Beneath Dam Slope Protection and Blanket Drain - 1 test per 2,000 cubic yards. Filter Sands - Embankment Drains, Beneath Dam Slope Protection and Pressure Relief System (Blanket Drain only) - 1 test per 2,000 cubic yards. Note: Each In-Place Density test shall be accompanied by the laboratory test for Amount of Material in Soils Finer than the No. 200 Sieve (ASTM D1140).					
2.29	In Select Fill stockpiles, perform a minimum of two tests per day material being placed during stable weather conditions. During wet weather periods, perform tests as needed to verify uniform moisture content conditions, and that moisture contents are within 2 percent of the optimum for compaction for the specific materials.					
2.30	Materials to be utilized for Select Fill shall be tested for the parameters and at the frequencies shown in Section 3.10.1 of this specification. Further, representative samples for these uses shall be tested for permeability in accordance with ASTM D5084, at a frequency of one test per 10,000 cubic yards.					

IF ANY OF THE ABOVE REQUIREMENTS WERE MARKED NO, EXPLAIN:

3	POST-CONSTRUCTION INSPECTIONS	NA	QC REP (INITIALS	DATE	QC REP (INITIALS	DATE
3.1	Has the Final Punch List been completed and provided to the District for this DFOW?					
3.2	Has the Pre-Final Punch List been completed and submitted for this DFOW?					
3.3	Has the Final Follow-up Control Phase Inspection been performed for this DFOW?					
3.4	Has the Final Acceptance Inspection been performed for this DFOW?					
3.5	Have all asbuilts been recorded for this DFOW?					
3.6	WARRANTY: Has the warranty met the requirements specified in Section 01 61 03 EQUIPMENT AND MATERIALS?					

IF ANY OF THE ABOVE REQUIREMENTS WERE MARKED NO, EXPLAIN:

CONTRACTOR'S QC REPRESENTATIVE'S SIGNATURE	DATE	DISTRICT'S QA REPRESENTATIVE'S SIGNATURE	DATE

DFOW INSPECTION REPORT

PROJECT NAME: C-43 WEST BASIN STORAGE RESERVOIR
CONTRACT NUMBER: CN XXXXXXXXX
PACKAGE 4 - CIVIL WORKS

DEFINEABLE FEATURE OF WORK:	DEWATERING		
PRIME CONTRACTOR:		**DATE:**	
PRIME CONTRACTOR SUPERVISOR:			
QUALITY CONTROL SYSTEMS MANAGER:			
QC SPECIALIST:			
SUBCONTRACTOR:			
ACTIVITY:			
ACTIVITY LOCATION:			
ACTIVITY SPECIFICATIONS:	31 52 10		

1	PRE-CONSTRUCTION INSPECTIONS	NA	QC REP (INITIALS	DATE	QC REP (INITIALS	DATE
1.1	Have the DFOW specifications and drawings been reviewed with the understanding of specified requirements?					
1.2	Have the CQCP and AHA been reviewed with the comprehension and awareness of their Requirements?					
1.3	Have all pre-construction submittals and work plans been approved for this DFOW by the District?					
1.4	Have all RFIs been answered, reviewed and understood by the appropriate CQC Staff, Superintendant and required subcontractor?					
1.5	Has previous work been completed to enable this DFOW to begin without covering up non-compliance work?					
1.6	Has any and all preliminary work been completed in order to begin work for this DFOW?					
1.7	Have all as-builts been recorded from previous DFOW?					
1.8	Materials: Do all materials and equipment conform to the specification?					
1.9	Have all materials and equipment been handled and stored in accordance with the project specifications and the manufacturer's recommendations of requirements?					
1.10	Has the contractor received all required written approvals by the District to begin work for this DFOW?					
1.11	Has the Preparatory Control Phase Inspection been performed and properly documented for this DFOW?					

IF ANY OF THE ABOVE REQUIREMENTS WERE MARKED NO, EXPLAIN:

2	CONSTRUCTION INSPECTIONS		NA	QC REP (INITIALS	DATE	QC REP (INITIALS	DATE
2.1	Has the Initial Control Phase Inspection been performed for this DFOW?						
2.2	Are the DQCRs and Daily Safety Reports current and complete with the correct information documenting this DFOW?						
2.3	Has the contractor submitted certification from a Professional Engineer registered in the State of Florida that the dewatering system has been designed to meet the criteria specified of the contract?						
2.4	Excavation Dewatering- Has the contractor ensured that excavations do not extend below the existing phreatic surface or local groundwater table as specified in section 31 52 10, 3.1.1.2a Excavation Dewatering?						
2.5	Excavation Dewatering- Prior to commencement of the work for each excavation, has the dewatering system lowered the water levels in as required and in accordance with the dewatering plan submittal, and as approved by the District over the entire excavation area, including the portion of the Intake Canal adjacent to the pump station?						
2.6	Excavation Dewatering- Has the dewatering system been used to maintain dry excavations and for maintaining required phreatic and piezometric levels on a continuous basis, 7 days a week and 24 hours a day and in accordance with section 31 52 10, 3.1.1.2b Excavation Dewatering?						
2.7	Excavation Dewatering- Has the contractor measured and quality monitored the rate of discharge and logged every 24 hours or as required by the District?						
2.8	Excavation Dewatering- Has the contractor maintained a 100 percent backup power source in the event of a loss of primary power supply and stored sufficient fuel on site to enable the backup power supply to function continuously for seven days?						
2.9	Excavation Dewatering- Does the monitoring system include an automatic alarm system to provide immediate notification in the event of power loss and/or failure of any system or component?						
2.10	Excavation Dewatering- Has the contractor made provisions to dewater the adjacent work in the case that the cessation of dewatering of an excavation has a negative impact on the dewatering of any adjacent work to the levels specified in Section 31 52 10 DEWATERING AND COFFERDAM and the Drawings?						
2.11	Excavation Dewatering- Has the contractor disposed of water pumped, drained, or otherwise collected from the construction site in accordance with section 31 52 10, 3.1.1.4 Disposal of Water?						
2.12	Excavation Dewatering- Does the monitoring data confirm that the dewatering system is performing as required in order to achieve the target water levels below the excavation bottom?						

2.13	Excavation Dewatering- Has the contractor decommissioned and removed all temporary dewatering systems in accordance with criteria described in the specifications?					

IF ANY OF THE ABOVE REQUIREMENTS WERE MARKED NO, EXPLAIN:

3	POST-CONSTRUCTION INSPECTIONS	NA	QC REP (INITIALS	DATE	QC REP (INITIALS	DATE
3.1	Has the Final Punch List been completed and provided to the District for this DFOW?					
3.2	Has the Pre-Final Punch List been completed and submitted for this DFOW?					
3.3	Has the Final Follow-up Control Phase Inspection been performed for this DFOW?					
3.4	Has the Final Acceptance Inspection been performed for this DFOW?					
3.5	Have all asbuilts been recorded for this DFOW?					
3.6	WARRANTY: Has the warranty met the requirements specified in Section 01 61 03 EQUIPMENT AND MATERIALS?					

IF ANY OF THE ABOVE REQUIREMENTS WERE MARKED NO, EXPLAIN:

CONTRACTOR'S QC REPRESENTATIVE'S SIGNATURE	DATE	DISTRICT'S QA REPRESENTATIVE'S SIGNATURE	DATE

DFOW INSPECTION REPORT

PROJECT NAME: C-43 WEST BASIN STORAGE RESERVOIR
CONTRACT NUMBER: CN XXXXXXXXX
PACKAGE 4 - CIVIL WORKS

DEFINEABLE FEATURE OF WORK:	COFFERDAMS		
PRIME CONTRACTOR:		**DATE:**	
PRIME CONTRACTOR SUPERVISOR:			
QUALITY CONTROL SYSTEMS MANAGER:			
QC SPECIALIST:			
SUBCONTRACTOR:			
ACTIVITY:			
ACTIVITY LOCATION:			
ACTIVITY SPECIFICATIONS:	31 52 10		

1	PRE-CONSTRUCTION INSPECTIONS	NA	QC REP (INITIALS	DATE	QC REP (INITIALS	DATE
1.1	Have the DFOW specifications and drawings been reviewed with the understanding of specified requirements?					
1.2	Have the CQCP and AHA been reviewed with the comprehension and awareness of their Requirements?					
1.3	Have all pre-construction submittals and work plans been approved for this DFOW by the District?					
1.4	Have all RFIs been answered, reviewed and understood by the appropriate CQC Staff, Superintendant and required subcontractor?					
1.5	Has previous work been completed to enable this DFOW to begin without covering up non-compliance work?					
1.6	Has any and all preliminary work been completed in order to begin work for this DFOW?					
1.7	Have all as-builts been recorded from previous DFOW?					
1.8	Materials: Do all materials and equipment conform to the specification?					
1.9	Have all materials and equipment been handled and stored in accordance with the project specifications and the manufacturer's recommendations of requirements?					
1.10	Has the contractor received all required written approvals by the District to begin work for this DFOW?					
1.11	Has the Preparatory Control Phase Inspection been performed and properly documented for this DFOW?					

IF ANY OF THE ABOVE REQUIREMENTS WERE MARKED NO, EXPLAIN:

2	CONSTRUCTION INSPECTIONS		NA	QC REP (INITIALS	DATE	QC REP (INITIALS	DATE
2.1	Has the Initial Control Phase Inspection been performed for this DFOW?						
2.2	Are the DQCRs and Daily Safety Reports current and complete with the correct information documenting this DFOW?						
2.3	COFFERDAM- Soldier Piles: Are soldier piles installed by necessary methods to tip elevation shown on approved submittal drawings and are prebored holes filled with a low strength grout mix designed by the contractor?						
2.4	COFFERDAM- Steel Sheet Piling: Are steel sheet pilings installed in plumb position with each pile interlocked with adjoining piles for its entire length so as to form a continuous diaphragm throughout the length of each run of wall, bearing tightly against original ground?						
2.5	COFFERDAM- Steel Sheet Piling: Has the contractor installed sheeting to depth required by design, but not less than tip elevations shown on the Cofferdam Work Plan?						
2.6	COFFERDAM- Steel Sheet Piling: Do the equipment, the methods of installation, cutting, and splicing conform to the approved shop drawings?						
2.7	COFFERDAM- Internal Bracing Support System: Are all bracing or wale support members installed and maintained in tight continuous contact with each other and with the surface being supported?						
2.8	COFFERDAM- Internal Bracing Support System: Are bracing members preloaded?						
2.9	COFFERDAM- Internal Bracing Support System: Are walers and struts provided with intermediate bracing as needed to enable them to carry their maximum design load without distortion or buckling?						
2.10	COFFERDAM- Shoring Wall Monitoring: Has the contractor inspected the cofferdam components prior to start of work each day?						
2.11	COFFERDAM- Shoring Wall Monitoring: Has the contractor established horizontal control survey points (movement measurement points) on the tops of temporary walls at a spacing not greater than 20 feet horizontal spacing on all						
2.12	COFFERDAM- Shoring Wall Monitoring: Has the contractor performed at least two initial baseline surveys on different days of horizontal position of the shoring to an accuracy of 0.01 foot?						
2.13	COFFERDAM- Shoring Wall Monitoring: Has the contractor performed survey measurements and submit to the District on a weekly basis until backfilling is complete?						
2.14	COFFERDAM- Removal Of Support Systems: Has the contractor removed, wholly or in part, in a manner that has ot disturbed or damaged adjacent new or existing construction or utilities?						
2.15	COFFERDAM- Removal Of Support Systems: Has the contractor immediately filled all voids with materials and procedures approved by the District?						

2.16	COFFERDAM- Removal Of Support Systems: Have all damages to property resulting from removal been promptly repaired?					

IF ANY OF THE ABOVE REQUIREMENTS WERE MARKED NO, EXPLAIN:

3	POST-CONSTRUCTION INSPECTIONS	NA	QC REP (INITIALS	DATE	QC REP (INITIALS	DATE
3.1	Has the Final Punch List been completed and provided to the District for this DFOW?					
3.2	Has the Pre-Final Punch List been completed and submitted for this DFOW?					
3.3	Has the Final Follow-up Control Phase Inspection been performed for this DFOW?					
3.4	Has the Final Acceptance Inspection been performed for this DFOW?					
3.5	Have all asbuilts been recorded for this DFOW?					
3.6	WARRANTY: Has the warranty met the requirements specified in Section 01 61 03 EQUIPMENT AND MATERIALS?					

IF ANY OF THE ABOVE REQUIREMENTS WERE MARKED NO, EXPLAIN:

CONTRACTOR'S QC REPRESENTATIVE'S SIGNATURE	DATE	DISTRICT'S QA REPRESENTATIVE'S SIGNATURE	DATE

DFOW INSPECTION REPORT

PROJECT NAME: C-43 WEST BASIN STORAGE RESERVOIR
CONTRACT NUMBER: CN XXXXXXXXX
PACKAGE 4 - CIVIL WORKS

DEFINEABLE FEATURE OF WORK:	**PRESSURE RELIEF SYSTEM**		
PRIME CONTRACTOR:		**DATE:**	
PRIME CONTRACTOR SUPERVISOR:			
QUALITY CONTROL SYSTEMS MANAGER:			
QC SPECIALIST:			
SUBCONTRACTOR:			
ACTIVITY:			
ACTIVITY LOCATION:			
ACTIVITY SPECIFICATIONS:	**35 41 21**		

1	PRE-CONSTRUCTION INSPECTIONS	NA	QC REP (INITIALS	DATE	QC REP (INITIALS	DATE
1.1	Have the DFOW specifications and drawings been reviewed with the understanding of specified requirements?					
1.2	Have the CQCP and AHA been reviewed with the comprehension and awareness of their Requirements?					
1.3	Have all pre-construction submittals and work plans been approved for this DFOW by the District?					
1.4	Have all RFIs been answered, reviewed and understood by the appropriate CQC Staff, Superintendant and required subcontractor?					
1.5	Has previous work been completed to enable this DFOW to begin without covering up non-compliance work?					
1.6	Has any and all preliminary work been completed in order to begin work for this DFOW?					
1.7	Have all as-builts been recorded from previous DFOW?					
1.8	Materials: Do all materials and equipment conform to the specification?					
1.9	Have all materials and equipment been handled and stored in accordance with the project specifications and the manufacturer's recommendations of requirements?					
1.10	Has the contractor received all required written approvals by the District to begin work for this DFOW?					
1.11	Is the contractor aware that NO Sand Relief Column construction may begin prior to excavation of a bench at elevation +8 feet along the east bank of the Townsend Canal, and excavation of and dewatering of the Intake Canal between the Local Access Bridge and the northwest side of the S-470 Pumping Station?					

1.12	PREPARATION- Prior to beginning the work, has the Intake Canal work area been excavated to the grade consistent with the bottom of the Rip Rap section, the Townsend Canal Bench been excavated to +8 feet, and the area southeast of the S-476 Pumping Station been excavated to elevation +15 feet?						
1.13	PREPARATION- Have all the above areas been fully dewatered to enable dry construction activities in accordance with section 35 41 21, 1.11 RESPONSIBILITIES, No. 1?						
1.14	PREPARATION- Has the contractor layed out alignment of and locations of Sand Relief Columns in accordance with locations shown on the Drawings?						
1.15	SUMMARY OF PROOF OF CONCEPT- Has the contractor submitted a written narrative with associated graphics as needed to summarize the means and methods utilized by the contractor for each aspect of the work, to achieve the quality objectives of the contract, and to document the work?						
1.16	LABORATORY TESTING OF BACKFILL- Prior to construction, has the contractor provided the source of the backfill material proposed to be used and the sieve analysis results for that materials?						
1.17	LABORATORY TESTING OF BACKFILL- Prior to construction, has the contractor submit laboratory test results on the materials proposed to be used as Sand Relief Column Backfill?						
1.18	Has the Preparatory Control Phase Inspection been performed and properly documented for this DFOW?						

IF ANY OF THE ABOVE REQUIREMENTS WERE MARKED NO, EXPLAIN:

2	CONSTRUCTION INSPECTIONS	NA	QC REP (INITIALS	DATE	QC REP (INITIALS	DATE
2.1	Has the Initial Control Phase Inspection been performed for this DFOW?					
2.2	Are the DQCRs and Daily Safety Reports current and complete with the correct information documenting this DFOW?					
2.3	Set Casing- Has the contractor installed temporary steel casings to the tip elevation of Sand Relief Columns shown on the Drawings and in accordance with section 35 41 21, 3.2.1 Set Casing?					
2.4	Excavation- Has the contractor excavated to the elevation shown on the drawing for each Sand Relief Column and removed all materials from the excavation from the work area and placed in stockpile areas as shown on the Drawings?					
2.5	Excavation- Has the contractor probed the bottom of each excavation at four equally spaced locations around the perimeter of casing and once in the center to verify that the design tip elevation has been reached? (A maximum tolerance of 0.5 feet shall be considered acceptable.)					

2.6	Excavation- Has water been introduced to the casings to maintain hydrostatic head above the piezometric heads in the dewatered strata in the vicinity of the tip elevation of the columns? (Water for this purpose may be obtained from an on-site source.)						
2.7	Excavation- Has the water that has spilled out of the casings during the excavation process been routed away from the alignment of previously placed and backfilled columns?						
2.8	Backfill- Have backfill materials conforming to FDOT 902-4 Filter Sand with a maximum of 2 percent by weight passing the No. 200 sieve been placed using a tremie pipe that extends to a depth of not more than 10 feet above the excavation bottom or active backfill surface?						
2.9	Backfill- At 10-foot vertical intervals during backfilling, have the active backfill surface been sounded to verify that the materials are reaching the base of the excavation?						
2.10	Backfill- Has the volume of materials used to backfill each column been measured and recorded by the contractor?						
2.11	Backfill- Has the contractor's Professional Engineer maintained Records of the volumetric measurements and probes and submitted as part of the As-Built Details of Installed Pressure Relief Systems?						
2.12	Retrieve Casing- At the conclusion of backfilling each Sand Relief Column, has the contractor pulled the casing from the excavation? (Alternatively, the casing may be pulled incrementally, provided the tip of the casing is not less than 5 feet below the active backfill surface.)						
2.13	Sequence of Installation- Has the contractor installed Sand Relief Columns at every other location initially, then return to install the in between columns?						
2.14	Limits of Work- Have Sand Relief Columns been installed at the locations shown on the Drawings, including along the centerline of the Intake Canal, at least 10 overlapped laterally with the previously placed Bid Package 3 contract sand relief columns?						
2.15	Finished Sand Relief Columns- Has the area of the Sand Relief Columns been finished to match the grade of the bottom of the proposed Stone Rip Rap section? (If fill is needed to reach the grade of the bottom of the Stone Rip Rap section, that fill shall be composed of Sand Relief Column Backfill materials.)						
2.16	Finished Sand Relief Columns- Has the area been protected from equipment traffic, rutting, erosion, backfilling of soils other than Sand Relief Column Backfill until such time as the filter fabric, bedding stone, and Stone Rip Rap are placed?						
2.17	Finished Sand Relief Columns- Has stone Rip Rap been installed in accordance with section 35 31 19?						
2.18	Blanket Drain Outfall- Has the contractor excavated for and placed the filter sand, PVC Pipe, Blanket Drain, Outfall piping, aggregate stone and filter sand surrounding the drains, and the Stone Rip Rap in accordance with the details shown on the Drawings?						
2.19	Area Southeast of S-476- For the portion of the pressure relief system located southeast of Pump Station S-476, has the contractor excavated to provide a working grade elevation of +17 feet, and installed sand relief columns to the grades shown on the Drawings?						

2.20	Area Southeast of S-476- Has the contractor installed two rows of steel sheet piling, and excavated between the sheeting to elevation -2 feet for the placement of drainage piping?					
2.21	Area Southeast of S-476- Once the piping is installed, has the contractor backfilled the excavation with FDOT filter sand, all as indicated on the Drawings?					
2.22	AS-BUILT DETAILS OF INSTALLED PRESSURE RELIEF SYSTEMS- Has the contractor prepared and submitted signed and sealed as-built documents that include surveyed As-Built locations of Sand Relief Columns, Collection Pipe, Blanket Drain, and Outfall Pipes, along with verification of quantities used to backfill each Sand Relief Column and laboratory test results for Sand Relief Column Backfill materials?					

IF ANY OF THE ABOVE REQUIREMENTS WERE MARKED NO, EXPLAIN:

3	POST-CONSTRUCTION INSPECTIONS	NA	QC REP (INITIALS	DATE	QC REP (INITIALS	DATE
3.1	Has the Final Punch List been completed and provided to the District for this DFOW?					
3.2	Has the Pre-Final Punch List been completed and submitted for this DFOW?					
3.3	Has the Final Follow-up Control Phase Inspection been performed for this DFOW?					
3.4	Has the Final Acceptance Inspection been performed for this DFOW?					
3.5	Have all asbuilts been recorded for this DFOW?					
3.6	WARRANTY: Has the warranty met the requirements specified in Section 01 61 03 EQUIPMENT AND MATERIALS?					

IF ANY OF THE ABOVE REQUIREMENTS WERE MARKED NO, EXPLAIN:

CONTRACTOR'S QC REPRESENTATIVE'S SIGNATURE	DATE	DISTRICT'S QA REPRESENTATIVE'S SIGNATURE	DATE

DFOW INSPECTION REPORT

PROJECT NAME: C-43 WEST BASIN STORAGE RESERVOIR
CONTRACT NUMBER: CN XXXXXXXXX
PACKAGE 4 - CIVIL WORKS

DEFINEABLE FEATURE OF WORK:	SOIL BENTONITE WALL		
PRIME CONTRACTOR:		**DATE:**	
PRIME CONTRACTOR SUPERVISOR:			
QUALITY CONTROL SYSTEMS MANAGER:			
QC SPECIALIST:			
SUBCONTRACTOR:			
ACTIVITY:			
ACTIVITY LOCATION:			
ACTIVITY SPECIFICATIONS:	31 56 13.13		

1	PRE-CONSTRUCTION INSPECTIONS	NA	QC REP (INITIALS	DATE	QC REP (INITIALS	DATE
1.1	Have the DFOW specifications and drawings been reviewed with the understanding of specified requirements?					
1.2	Have the CQCP and AHA been reviewed with the comprehension and awareness of their Requirements?					
1.3	Have all pre-construction submittals and work plans been approved for this DFOW by the District?					
1.4	Have all RFIs been answered, reviewed and understood by the appropriate CQC Staff, Superintendant and required subcontractor?					
1.5	Has previous work been completed to enable this DFOW to begin without covering up non-compliance work?					
1.6	Has any and all preliminary work been completed in order to begin work for this DFOW?					
1.7	Have all as-builts been recorded from previous DFOW?					
1.8	Materials: Do all materials and equipment conform to the specification?					
1.9	Have all materials and equipment been handled and stored in accordance with the project specifications and the manufacturer's recommendations of requirements?					
1.10	Has the contractor received all required written approvals by the District to begin work for this DFOW?					
1.11	Has the contractor assigned an SBW Specialist to oversee, supervise, and direct the construction of all SBWs included in the Work? Is the SBW Specialist a resident on site for the full duration of the project?					

1.12	SUMMARY OF PROOF OF CONCEPT- Has the contractor submitted a written narrative with associated graphics as needed to summarize the means and methods utilized by the contractor for each aspect of the work, to achieve the quality objectives of the contract, and to document the work?						
1.13	Has the Preparatory Control Phase Inspection been performed and properly documented for this DFOW?						

IF ANY OF THE ABOVE REQUIREMENTS WERE MARKED NO, EXPLAIN:

2	CONSTRUCTION INSPECTIONS		NA	QC REP (INITIALS	DATE	QC REP (INITIALS	DATE
2.1	Has the Initial Control Phase Inspection been performed for this DFOW?						
2.2	Are the DQCRs and Daily Safety Reports current and complete with the correct information documenting this DFOW?						
2.3	CERTIFICATIONS AND QUALITY CONTROL TESTING- Bentonite: Has each truckload of bentonite delivered to the site been sampled and tested in accordance with API Spec 13A?						
2.4	CERTIFICATIONS AND QUALITY CONTROL TESTING- Bentonite: Has the contractor provided the District with manufacturer's certificates for each railroad car load of bentonite shipped and used for the project?						
2.5	CERTIFICATIONS AND QUALITY CONTROL TESTING- Water: Has the water to be mixed with the bentonite been tested to confirm conformance with mix design water and to the requirements of API RP 13B-1 and API RP 13B-2?						
2.6	CERTIFICATIONS AND QUALITY CONTROL TESTING- Water: Have the above tests been repeated monthly and repeated if there is an apparent change in water quality?						
2.7	CERTIFICATIONS AND QUALITY CONTROL TESTING- Fresh Bentonite Slurry: Has the Fresh bentonite slurry been sampled and tested from each pond, pit or tank prepared for use in the trench Prior to use in the trench and at least twice per shift the slurry for viscosity and density, and at least once per shift for pH and filtrate in accordance with the publications listed in paragraph APPLICABLE PUBLICATIONS?						
2.8	CERTIFICATIONS AND QUALITY CONTROL TESTING- Trench Bentonite Slurry: Has the Trench bentonite slurry been sampled within five feet of the top of the trench and within five feet of the bottom of the trench from a zone within 20 feet of the toe of the soil- bentonite backfill slope at least twice per shift for each heading for viscosity, filtration, and density (sand content) in accordance with the publications listed in paragraph APPLICABLE PUBLICATIONS?						
2.9	CERTIFICATIONS AND QUALITY CONTROL TESTING- have sampling methods and devices been in accordance as defined in the quality control plan?						
2.10	CERTIFICATIONS AND QUALITY CONTROL TESTING- Have excavation and soil-bentonite backfill soundings been made every 10 feet along the centerline of the excavation and in accordance with section 31 56 13.13, 1.6 CERTIFICATIONS AND QUALITY CONTROL TESTING, F?						

2.11	CERTIFICATIONS AND QUALITY CONTROL TESTING- Has backfilled been tested in accordance with section 31 56 13.13, 1.6 CERTIFICATIONS AND QUALITY CONTROL TESTING, G?					
2.12	CERTIFICATIONS AND QUALITY CONTROL TESTING- Have Field Test Results, Field Soundings and Measurements and . Laboratory Test Results been submitted to the District?					
2.13	EXCAVATION- Has the contractor performed excavation in accordance with the approved Plan and in accodance with the provisions specified in section 31 56 13.13, 3.3 EXCAVATION?					
2.14	TRENCH BACKFILLING- Has the contractor performed trench backfilling in accordance with the approved Plan and in accodance with the provisions specified in section 31 56 13.13, 3.4 TRENCH BACKFILLING?					

IF ANY OF THE ABOVE REQUIREMENTS WERE MARKED NO, EXPLAIN:

3	POST-CONSTRUCTION INSPECTIONS	NA	QC REP (INITIALS	DATE	QC REP (INITIALS	DATE
3.1	Has the Final Punch List been completed and provided to the District for this DFOW?					
3.2	Has the Pre-Final Punch List been completed and submitted for this DFOW?					
3.3	Has the Final Follow-up Control Phase Inspection been performed for this DFOW?					
3.4	Has the Final Acceptance Inspection been performed for this DFOW?					
3.5	Have all asbuilts been recorded for this DFOW?					
3.6	WARRANTY: Has the warranty met the requirements specified in Section 01 61 03 EQUIPMENT AND MATERIALS?					

IF ANY OF THE ABOVE REQUIREMENTS WERE MARKED NO, EXPLAIN:

CONTRACTOR'S QC REPRESENTATIVE'S SIGNATURE	DATE	DISTRICT'S QA REPRESENTATIVE'S SIGNATURE	DATE

DFOW INSPECTION REPORT

PROJECT NAME: C-43 WEST BASIN STORAGE RESERVOIR
CONTRACT NUMBER: CN XXXXXXXXX
PACKAGE 4 - CIVIL WORKS

DEFINEABLE FEATURE OF WORK:	SOIL CEMENT SLOPE PROTECTION		
PRIME CONTRACTOR:		**DATE:**	
PRIME CONTRACTOR SUPERVISOR:			
QUALITY CONTROL SYSTEMS MANAGER:			
QC SPECIALIST:			
SUBCONTRACTOR:			
ACTIVITY:			
ACTIVITY LOCATION:			
ACTIVITY SPECIFICATIONS:	31 25 13		

1	PRE-CONSTRUCTION INSPECTIONS	NA	QC REP (INITIALS	DATE	QC REP (INITIALS	DATE
1.1	Have the DFOW specifications and drawings been reviewed with the understanding of specified requirements?					
1.2	Have the CQCP and AHA been reviewed with the comprehension and awareness of their Requirements?					
1.3	Have all pre-construction submittals and work plans been approved for this DFOW by the District?					
1.4	Have all RFIs been answered, reviewed and understood by the appropriate CQC Staff, Superintendant and required subcontractor?					
1.5	Has previous work been completed to enable this DFOW to begin without covering up non-compliance work?					
1.6	Has any and all preliminary work been completed in order to begin work for this DFOW?					
1.7	Have all as-builts been recorded from previous DFOW?					
1.8	Materials: Do all materials and equipment conform to the specification?					
1.9	Have all materials and equipment been handled and stored in accordance with the project specifications and the manufacturer's recommendations of requirements?					
1.10	Has the contractor received all required written approvals by the District to begin work for this DFOW?					
1.11	SUMMARY OF PROOF OF CONCEPT- Has the contractor submitted a written narrative with associated graphics as needed to summarize the means and methods utilized by the contractor for each aspect of the work, to achieve the quality objectives of the contract, and to document the work?					

1.12	MIX DESIGN PROCEDURE- Has the contractor performed all the specified sampling for the Mix Design and submitted to the District the Mix Design test results within 50 days from the time each stockpile is sampled and in accordance with section 31 25 13, 3.1 MIX DESIGN PROCEDURE?						
	Has the Preparatory Control Phase Inspection been performed and properly documented for this DFOW?						

IF ANY OF THE ABOVE REQUIREMENTS WERE MARKED NO, EXPLAIN:

2	CONSTRUCTION INSPECTIONS	NA	QC REP (INITIALS	DATE	QC REP (INITIALS	DATE
2.1	Has the Initial Control Phase Inspection been performed for this DFOW?					
2.2	Are the DQCRs and Daily Safety Reports current and complete with the correct information documenting this DFOW?					
2.3	Soil aggregate for use in soil-cement construction, when tested in accordance with ASTM D422, shall conform to the gradation indicated in the table and shall be free of any deleterious materials.					
2.4	Soil aggregate for soil-cement shall not contain clay/silt lumps, and have a maximum organic content of 1 percent.					
2.5	See section for mix design procedures. - 31 25 13, 3.15.1					
2.6	The Contractor shall be responsible for all quality control (QC), inspections and testing associated with the work. Based upon the results of the QC inspections and tests, the Contractor shall take actions necessary to correct any items that are not in compliance with these specifications.					
2.7	The District with assistance and cooperation from the Contractor will perform independent quality assurance (QA) inspection and testing.					
2.8	Whenever it is found that either the weighing or the batching accuracy does not comply with specification requirements, the plant shall be shut down until necessary adjustments or repairs have been made. Discrepancies in recording shall be corrected immediately.					
2.9	Accuracy of proportioning of the continuousmixing plant shall be checked by the Contractor in the presence of the District for the cementitious material every 2 shifts, and for each aggregate at the beginning of construction and after every 5 shifts. The accuracy of proportioning shall be checked by simultaneously securing timed samples of the cementitious materials and the aggregate as they are fed to the mixer and weighing each as appropriate.					
2.10	The District will inspect construction joints prior to each lift of soil-cement placement. The Contractor shall obtain approval from the District prior to placing soil-cement at the start of each shift and at previously placed joints.					
2.11	The Contractor shall be responsible for measuring and recording soil-cement temperature, ambient temperature, weather conditions, time of placement, and method and location of placement.					

2.12	Three calibration blocks for the Nuclear Density Gauge shall be fabricated by the Contractor with soil-cement materials and proportions representative of those to be used during construction. The blocks shall be used each day before placement begins to calibrate the full depth readings of the nuclear density gauges used by the Contractor. See 31 25 13, 3.15.2 Field Density Testing a.						
2.13	The blocks shall be compacted to at least 98 percent of the maximum dry density, which will be determined by the Contractor in accordance with ASTM D558. See 31 25 13, 3.15.2 Field Density Testing b.						
2.14	Field Density and Moisture Testing: Field density test shall be performed by the Contractor on the soil-cement in accordance with ASTM D2937 or D6938 as soon as possible, but within 30 minutes, after the completion of vibratory rolling. See 31 25 13, 3.15.2 Field Density Testing c.						
2.15	Field density tests shall be performed at a frequency of one test per 50 cubic yards of soil-cement placed.						
2.16	Frequency of other QC related testing shall be as follows: i. Aggregate Gradation Testing - Daily ii. Heat of Neutralization of Soil-Cement - Daily iii. Moisture Content of Aggregate - Daily						

IF ANY OF THE ABOVE REQUIREMENTS WERE MARKED NO, EXPLAIN:

3	POST-CONSTRUCTION INSPECTIONS	NA	QC REP (INITIALS	DATE	QC REP (INITIALS	DATE
3.1	Has the Final Punch List been completed and provided to the District for this DFOW?					
3.2	Has the Pre-Final Punch List been completed and submitted for this DFOW?					
3.3	Has the Final Follow-up Control Phase Inspection been performed for this DFOW?					
3.4	Has the Final Acceptance Inspection been performed for this DFOW?					
3.5	Have all asbuilts been recorded for this DFOW?					
3.6	WARRANTY: Has the warranty met the requirements specified in Section 01 61 03 EQUIPMENT AND MATERIALS?					

IF ANY OF THE ABOVE REQUIREMENTS WERE MARKED NO, EXPLAIN:

CONTRACTOR'S QC REPRESENTATIVE'S SIGNATURE	DATE	DISTRICT'S QA REPRESENTATIVE'S SIGNATURE	DATE

DFOW INSPECTION REPORT

PROJECT NAME: C-43 WEST BASIN STORAGE RESERVOIR
CONTRACT NUMBER: CN XXXXXXXXX
PACKAGE 4 - CIVIL WORKS

DEFINEABLE FEATURE OF WORK:	BLANKET DRAIN, CHIMNEY DRAIN, TOE DRAIN & SLOPE PROTECTION UNDERDRAIN		
PRIME CONTRACTOR:		**DATE:**	
PRIME CONTRACTOR SUPERVISOR:			
QUALITY CONTROL SYSTEMS MANAGER:			
QC SPECIALIST:			
SUBCONTRACTOR:			
ACTIVITY:			
ACTIVITY LOCATION:			
ACTIVITY SPECIFICATIONS:	33 46 13		

1	PRE-CONSTRUCTION INSPECTIONS	NA	QC REP (INITIALS	DATE	QC REP (INITIALS	DATE
1.1	Have the DFOW specifications and drawings been reviewed with the understanding of specified requirements?					
1.2	Have the CQCP and AHA been reviewed with the comprehension and awareness of their Requirements?					
1.3	Have all pre-construction submittals and work plans been approved for this DFOW by the District?					
1.4	Have all RFIs been answered, reviewed and understood by the appropriate CQC Staff, Superintendant and required subcontractor?					
1.5	Has previous work been completed to enable this DFOW to begin without covering up non-compliance work?					
1.6	Has any and all preliminary work been completed in order to begin work for this DFOW?					
1.7	Have all as-builts been recorded from previous DFOW?					
1.8	Materials: Do all materials and equipment conform to the specification?					
1.9	Have all materials and equipment been handled and stored in accordance with the project specifications and the manufacturer's recommendations of requirements?					
1.10	Has the contractor received all required written approvals by the District to begin work for this DFOW?					
1.11	Drain Pipe Installation Plan- Has the contractor submitted a Drain Pipe Installation Plan inclusive of the means and methods to be utilized for the work, quality control methods and engineering controls, a description of the communications protocols for prework meetings and inspections, and a summary of the progress reporting methods to be utilized during the work?					

1.12	SUMMARY OF PROOF OF CONCEPT- Has the contractor submitted a written narrative with associated graphics as needed to summarize the means and methods utilized by the contractor for each aspect of the work, to achieve the quality objectives of the contract, and to document the work?						
1.13	Has the Preparatory Control Phase Inspection been performed and properly documented for this DFOW?						

IF ANY OF THE ABOVE REQUIREMENTS WERE MARKED NO, EXPLAIN:

2	CONSTRUCTION INSPECTIONS	NA	QC REP (INITIALS	DATE	QC REP (INITIALS	DATE
2.1	Has the Initial Control Phase Inspection been performed for this DFOW?					
2.2	Are the DQCRs and Daily Safety Reports current and complete with the correct information documenting this DFOW?					
2.3	Trenching and Excavation- Has the contractor performed required trenching and excavation in accordance with section 31 00 00 EARTHWORK and section 33 46 13, 3.1.3 Trenching and Excavation?					
2.4	Filter Material- Has the contractor placed graded filter material, a minimum of 6" in depth, in the bottom of area shown on the Drawings for its full width and length compacted as specified prior to laying of foundation drain pipe and in accordance with section 33 46 13, 3.1.4 Filter Material?					
2.5	Pipe Installation- Has the contractor removed all PVC piping with physical imperfections, which shall not be installed, from the project site?					
2.6	Pipe Installation- Has PVC piping been installed in accordance with manufacturer's specifications and with section 33 46 13, 3.1.5 Pipe Installation?					
2.7	Jointing- Cutting the Pipe: Has the contractor cut the pipe square with saws or pipe cutters designed specifically for this material while protecting pipe and fittings from serrated holding devices and abrasion?					
2.8	Jointing- Deburring Pipe: Has the contractor removed burrs from inside and outside pipe edges?					
2.9	Jointing- Cleaning Joining Surfaces: Has the contractor wiped off all dust, dirt, and moisture from surfaces to be cemented with a clean, dry rag or paper towel and removed gloss and any oily film from the pipe and couplers with clean steel wool, fine abrasive paper, chemical cleaner, primer, or as recommended by the manufacturer?					
2.10	Jointing- Application of Cement: Has the contractor used a natural bristle or nylon brush of adequate size or an applicator supplied with the can of cement while applying a moderate even coating of cement in the fitting socket completely covering the pipe joining surfaces only? (Make sure that the coated distance on the pipe is equal to the depth of the fitting socket.)					
2.11	Jointing- Assembly: Has the contractor made the joints as specified in section 33 46 13, 3.1.6.5 Assembly?					

2.12	Cleanouts: Has the contractor provided cleanouts in locations indicated and surveyed to provide horizontal location to nearest one foot, and elevation to nearest tenth of a foot?						
2.12	Cleanouts: Has the contractor field marked and protected locations of cleanouts for the duration of the contract?						
2.13	BACKFILLING- After joints and connections have been inspected and approved, has the contractor placed the specified pervious backfill material adjacent to and 12" above the top of the pipe, preventing displacement of or injury to the pipe, then compacted backfill as specified in Section 31 00 00 EARTHWORK?						
2.14	PROTECTION AND REPAIRS- Has the contractor practiced protection to the pipe as specified in section 33 46 13, 3.3 PROTECTION AND REPAIRS?						
2.15	QUALITY CONTROL INSPECTION AND TESTING- Has the Contractor sampled and tested gradation of filter materials at a frequency that provides at least one gradation per week per material type per installation crew?						

IF ANY OF THE ABOVE REQUIREMENTS WERE MARKED NO, EXPLAIN:

3	POST-CONSTRUCTION INSPECTIONS	NA	QC REP (INITIALS	DATE	QC REP (INITIALS	DATE
3.1	Has the Final Punch List been completed and provided to the District for this DFOW?					
3.2	Has the Pre-Final Punch List been completed and submitted for this DFOW?					
3.3	Has the Final Follow-up Control Phase Inspection been performed for this DFOW?					
3.4	Has the Final Acceptance Inspection been performed for this DFOW?					
3.5	Have all asbuilts been recorded for this DFOW?					
3.6	WARRANTY: Has the warranty met the requirements specified in Section 01 61 03 EQUIPMENT AND MATERIALS?					

IF ANY OF THE ABOVE REQUIREMENTS WERE MARKED NO, EXPLAIN:

CONTRACTOR'S QC REPRESENTATIVE'S SIGNATURE	DATE	DISTRICT'S QA REPRESENTATIVE'S SIGNATURE	DATE

DFOW INSPECTION REPORT

PROJECT NAME: C-43 WEST BASIN STORAGE RESERVOIR
CONTRACT NUMBER: CN XXXXXXXXX
PACKAGE 4 - CIVIL WORKS

DEFINEABLE FEATURE OF WORK:	PERMANENT GEOTECHNICAL INSTRUMENTATION		
PRIME CONTRACTOR:		**DATE:**	
PRIME CONTRACTOR SUPERVISOR:			
QUALITY CONTROL SYSTEMS MANAGER:			
QC SPECIALIST:			
SUBCONTRACTOR:			
ACTIVITY:			
ACTIVITY LOCATION:			
ACTIVITY SPECIFICATIONS:	31 09 00		

1	PRE-CONSTRUCTION INSPECTIONS	NA	QC REP (INITIALS	DATE	QC REP (INITIALS	DATE
1.1	Have the DFOW specifications and drawings been reviewed with the understanding of specified requirements?					
1.2	Have the CQCP and AHA been reviewed with the comprehension and awareness of their Requirements?					
1.3	Have all pre-construction submittals and work plans been approved for this DFOW by the District?					
1.4	Have all RFIs been answered, reviewed and understood by the appropriate CQC Staff, Superintendant and required subcontractor?					
1.5	Has previous work been completed to enable this DFOW to begin without covering up non-compliance work?					
1.6	Has any and all preliminary work been completed in order to begin work for this DFOW?					
1.7	Have all as-builts been recorded from previous DFOW?					
1.8	Materials: Do all materials and equipment conform to the specification?					
1.9	Have all materials and equipment been handled and stored in accordance with the project specifications and the manufacturer's recommendations of requirements?					
1.10	Has the contractor received all required written approvals by the District to begin work for this DFOW?					
1.11	Has the Preparatory Control Phase Inspection been performed and properly documented for this DFOW?					

IF ANY OF THE ABOVE REQUIREMENTS WERE MARKED NO, EXPLAIN:

2	CONSTRUCTION INSPECTIONS		NA	QC REP (INITIALS	DATE	QC REP (INITIALS	DATE
2.1	Has the Initial Control Phase Inspection been performed for this DFOW?						
2.2	Are the DQCRs and Daily Safety Reports current and complete with the correct information documenting this DFOW?						
2.3	QUALIFICATIONS- Has the contractor utilized the services of a certified water well driller licensed by the State of Florida for the construction of the piezometers?						
2.4	QUALIFICATIONS- Has the contractor provided the piezometer installation work under the direct supervision of a geotechnical engineer registered in the State of Florida (i.e. licensed Florida P.E.)?						
2.5	QUALIFICATIONS- Has the contractor utilized the services of a Professional Survey Mapper (PSM) for the survey of piezometer, settlement plate and survey monument locations and elevations?						
2.6	PIEZOMETER INSTALLATION- Has the contractor installed, grouted and developed pizometers in accordance with section 31 09 00, 3.1 PIEZOMETER INSTALLATION, approved work plans and drawings?						
2.7	PIEZOMETER COMPLETION REPORTS- Has the contractor submitted reports after installation of each and every piezometer in accordance with section 31 09 00, 3.1.5 PIEZOMETER COMPLETION REPORTS?						
2.8	PERMANENT PIEZOMETERS- Is each piezometer installed in accordance with the details indicated on the Drawings and section 31 09 00, 3.4 PERMANENT PIEZOMETERS B?						
2.9	PERMANENT PIEZOMETERS- do all the piezometer installations include the construction of clusters with various depths and elevations In accordance with the piezometer schedules shown on the Drawings?						
2.10	PERMANENT PIEZOMETERS- Are the piezometers (i.e. Geokon Model 4500) set in monitoring wells to the prescribed elevations shown on the Drawings?						
2.11	PERMANENT PIEZOMETERS- Are the piezometers installed from the crest of the dam and/or adjacent to the Toe Road as shown on the Drawings and in accordance with section 31 09 00, 3.4 PERMANENT PIEZOMETERS G?						
2.12	PERMANENT PIEZOMETERS- Is each vibrating wire piezometer calibrated by the Contractor in accordance with the information provided in the Geokon Instruction Manual for Model 4500 Series Vibrating Wire Piezometers?						
2.13	PERMANENT PIEZOMETERS- Does each Permanent Geotechnical Monitoring station include an RTU Data Logger as shown on the Drawings and in accordance with section 31 09 00, 3.4 PERMANENT PIEZOMETERS I?						

2.14	PERMANENT PIEZOMETERS- Has a Florida registered land surveyor surveyed actual piezometer locations and the ground surface elevation at the piezometer locations within 7 days following installation of the piezometer and has this certified survey information been submitted to the DISTRICT?						
2.15	PERMANENT PIEZOMETERS- Has the ground surface at each piezometer location been leveled to +/- 0.1 feet or better, determined using datum NAVD 1988?						
2.16	PERMANENT PIEZOMETERS- Has the contractor monitored the pore pressures developed in the piezometers for a period of two weeks after installation, and provide the data to the District in Excel file format? (The piezometers are to be programed to read at a frequency of twice per day.)						
2.17	PERMANENT PIEZOMETERS- Are piezometers on the crest of the dam finished with below grade hand holes and covered with Soil Cement Slope Protection?						
2.18	PERMANENT PIEZOMETERS- Are piezometers at the Toe Road, and Belt Piezometers finished with hand hole covers as shown on the Drawings?						
2.22	SURVEY MONUMENTS- Has the contractor installed Survey Monuments in accordance with the details shown and at the locations shown on the Drawings?						

IF ANY OF THE ABOVE REQUIREMENTS WERE MARKED NO, EXPLAIN:

3	POST-CONSTRUCTION INSPECTIONS	NA	QC REP (INITIALS	DATE	QC REP (INITIALS	DATE
3.1	Has the Final Punch List been completed and provided to the District for this DFOW?					
3.2	Has the Pre-Final Punch List been completed and submitted for this DFOW?					
3.3	Has the Final Follow-up Control Phase Inspection been performed for this DFOW?					
3.4	Has the Final Acceptance Inspection been performed for this DFOW?					
3.5	Have all asbuilts been recorded for this DFOW?					
3.6	WARRANTY: Has the warranty met the requirements specified in Section 01 61 03 EQUIPMENT AND MATERIALS?					

IF ANY OF THE ABOVE REQUIREMENTS WERE MARKED NO, EXPLAIN:

CONTRACTOR'S QC REPRESENTATIVE'S SIGNATURE	DATE	DISTRICT'S QA REPRESENTATIVE'S SIGNATURE	DATE

DFOW INSPECTION REPORT

PROJECT NAME: C-43 WEST BASIN STORAGE RESERVOIR
CONTRACT NUMBER: CN XXXXXXXXX
PACKAGE 4 - CIVIL WORKS

DEFINEABLE FEATURE OF WORK:	GRASSING		
PRIME CONTRACTOR:		**DATE:**	
PRIME CONTRACTOR SUPERVISOR:			
QUALITY CONTROL SYSTEMS MANAGER:			
QC SPECIALIST:			
SUBCONTRACTOR:			
ACTIVITY:			
ACTIVITY LOCATION:			
ACTIVITY SPECIFICATIONS:	32 92 19		

1	PRE-CONSTRUCTION INSPECTIONS	NA	QC REP (INITIALS	DATE	QC REP (INITIALS	DATE
1.1	Have the DFOW specifications and drawings been reviewed with the understanding of specified requirements?					
1.2	Have the CQCP and AHA been reviewed with the comprehension and awareness of their Requirements?					
1.3	Have all pre-construction submittals and work plans been approved for this DFOW by the District?					
1.4	Have all RFIs been answered, reviewed and understood by the appropriate CQC Staff, Superintendant and required subcontractor?					
1.5	Has previous work been completed to enable this DFOW to begin without covering up non-compliance work?					
1.6	Has any and all preliminary work been completed in order to begin work for this DFOW?					
1.7	Have all as-builts been recorded from previous DFOW?					
1.8	Materials: Do all materials and equipment conform to the specification?					
1.9	Have all materials and equipment been handled and stored in accordance with the project specifications and the manufacturer's recommendations of requirements?					
1.10	Has the contractor provided soil preparation (including soil conditioners as required), fertilizing seeding, and surface topdressing of all newly graded finished earth surfaces and at all areas inside or outside the limits of construction that are disturbed by the contractor?					
1.11	Has the contractor thoroughly blended the compost with the stockpiled topsoil from the earthwork operations in accordance to the chart in section 32 92 19, 3.1.1.1 Amended Topsoil?					

1.12	Has the contractor met the indicated finish grade by providing 6" of amended topsoil and afterwards incorporated fertilizer into soil a minimum depth of 4" by disking, harrowing, tilling or other District approved method?					
1.13	Has the contractor removed debris and stones larger than 3/4" in any dimension remaining on the surface after finish grading?					
1.14	Has the contractor corrected irregularities in finish grade surfaces to eliminate depressions?					
1.15	Has the contractor provided protection of the finished topsoil areas from damage by vehicular or pedestrian traffic?					
1.16	Has fertilizer been applied in accordance with the Manufacturer's recommendations?					
1.17	Has the fertilizer been incorporated into the soil to a depth of at least 2" by discing, harrowing or raking, except on slopes steeper than 2 horizontal to 1 vertical?					
1.18	Has the contractor received all required written approvals by the District to begin work for this DFOW?					
1.19	Has the Preparatory Control Phase Inspection been performed and properly documented for this DFOW?					

IF ANY OF THE ABOVE REQUIREMENTS WERE MARKED NO, EXPLAIN:

2	CONSTRUCTION INSPECTIONS	NA	QC REP (INITIALS	DATE	QC REP (INITIALS	DATE
2.1	Has the Initial Control Phase Inspection been performed for this DFOW?					
2.2	Are the DQCRs and Daily Safety Reports current and complete with the correct information documenting this DFOW?					
2.3	Has the seed application been performed in accordance with the work plans? (32 92 19, 3.2)					
2.4	Has hay or straw mulch been applied in as specified?					
2.5	Has the grassed and mulched area been rolled, excluding slopes in access of 3 to 1 slopes, as specified?					
2.6	Has the grassed area been kept watered until germination is complete as specified?					
2.7	s the grassed area protected against traffic and other potential sourcesas specified?					

IF ANY OF THE ABOVE REQUIREMENTS WERE MARKED NO, EXPLAIN:

3	POST-CONSTRUCTION INSPECTIONS	NA	QC REP (INITIALS	DATE	QC REP (INITIALS	DATE
3.1	Has the Final Punch List been completed and provided to the District for this DFOW?					
3.2	Has the Pre-Final Punch List been completed and submitted for this DFOW?					
3.3	Has the Final Follow-up Control Phase Inspection been performed for this DFOW?					
3.4	Has the Final Acceptance Inspection been performed for this DFOW?					

3.5	Have all asbuilts been recorded for this DFOW?						
3.6	WARRANTY: Has the warranty met the requirements specified in Section 01 61 03 EQUIPMENT AND MATERIALS?						

IF ANY OF THE ABOVE REQUIREMENTS WERE MARKED NO, EXPLAIN:

CONTRACTOR'S QC REPRESENTATIVE'S SIGNATURE	DATE	DISTRICT'S QA REPRESENTATIVE'S SIGNATURE	DATE

DFOW INSPECTION REPORT

PROJECT NAME: C-43 WEST BASIN STORAGE RESERVOIR
CONTRACT NUMBER: CN XXXXXXXXX
PACKAGE 4 - CIVIL WORKS

DEFINEABLE FEATURE OF WORK:	MONITORING WELLS		
PRIME CONTRACTOR:		**DATE:**	
PRIME CONTRACTOR SUPERVISOR:			
QUALITY CONTROL SYSTEMS MANAGER:			
QC SPECIALIST:			
SUBCONTRACTOR:			
ACTIVITY:			
ACTIVITY LOCATION:			
ACTIVITY SPECIFICATIONS:	33 11 53		

1	PRE-CONSTRUCTION INSPECTIONS		NA	QC REP (INITIALS	DATE	QC REP (INITIALS	DATE
1.1	Have the DFOW specifications and drawings been reviewed with the understanding of specified requirements?						
1.2	Have the CQCP and AHA been reviewed with the comprehension and awareness of their Requirements?						
1.3	Have all pre-construction submittals and work plans been approved for this DFOW by the District?						
1.4	Have all RFIs been answered, reviewed and understood by the appropriate CQC Staff, Superintendant and required subcontractor?						
1.5	Has previous work been completed to enable this DFOW to begin without covering up non-compliance work?						
1.6	Has any and all preliminary work been completed in order to begin work for this DFOW?						
1.7	Have all as-builts been recorded from previous DFOW?						
1.8	Materials: Do all materials and equipment conform to the specification?						
1.9	Have all materials and equipment been handled and stored in accordance with the project specifications and the manufacturer's recommendations of requirements?						
1.10	Has the contractor received all required written approvals by the District to begin work for this DFOW?						
1.10	Has the contractor sampled and tested the water source, and obtained approval from the District.						
1.11	Has the Preparatory Control Phase Inspection been performed and properly documented for this DFOW?						

IF ANY OF THE ABOVE REQUIREMENTS WERE MARKED NO, EXPLAIN:

2	CONSTRUCTION INSPECTIONS	NA	QC REP (INITIALS	DATE	QC REP (INITIALS	DATE
2.1	Has the Initial Control Phase Inspection been performed for this DFOW?					
2.2	Are the DQCRs and Daily Safety Reports current and complete with the correct information documenting this DFOW?					
2.3	PROTECTION OF EXISTING CONDITIONS- Has the contractor maintained all existing survey monuments and monitoring wells, and protected them from damage from equipment and vehicular traffic, adhering to section 33 11 53, 3.1 PROTECTION OF EXISTING CONDITIONS?					
2.4	Decontamination- Has the contractor adhered to the decontamination specifications as specified in section 33 11 53, 3.2 Preparation?					
2.5	Drilling Method- Has the contractor used a drilling method which prevents the collapse of formation material against the well screen and casing during installation of the well and adheres to section 33 11 53, 3.3.1 Drilling Method?					
2.6	Test Hole Requirements- Has the contractor drilled one test hole for every monitoring well or well cluster installed and conformed to section 33 11 53, 3.3.2 Test Hole Requirements?					
2.7	Sampling for Geotechnical Analysis- Has the contractor taken samples of all materials penetrated by each drilled well/test hole conforming to section 33 11 53, 3.3.3.1 Sampling for Geotechnical Analysis a?					
2.8	Take samples of all materials penetrated by each drilled well/test hole. Perform soil sampling with a steel split tube sampler using standard sampling techniques in accordance with ASTM D1586.					
2.9	Extract samples from their in-situ environment in as near an intact, minimally disturbed condition as technically practical. Retrieve samples according to ASTM D1586 at least every 2.5 feet from each test hole.					
2.10	Place drive-sampled materials in airtight containers and label as specified in paragraph SAMPLE CONTAINERS, and deliver to the District designated facility.					
2.11	Test representative soil samples for grain-size distribution by mechanical means ASTM D422 (sieves down to the No. 200 size according to ASTM C136/C136M), moisture content according to ASTM D2216 and Atterberg limits according to ASTM D4318.					
2.12	Prepare description and identification of soils in accordance with ASTM D2488, laboratory classification of soils in accordance with ASTM D2487, and perform sampling to allow completion of the documents described in paragraph Borehole Logs.					

2.13	Dispose of slurry, drill cuttings, rock core; other solid or liquid material bailed, pumped, or otherwise removed from the borehole during drilling, installation, completion, and well development procedures; and fluids from material/equipment decontamination activities in area on the project site approved by the District.						
2.14	Establish coordinates and elevations for each monitoring well/test hole as specified						
2.15	Any well disapproved by the District, or any well decommissioned/abandoned by the Contractor for any reason shall be decommissioned/abandoned according to the requirements of the State of Florida, ASTM D5299, and the requirements of these specifications.						
2.16	Submit reports for well construction and development. Establish and maintain documentation and quality control reports for well construction and development to record the desired information and to assure compliance with contract requirements, including, but not limited to the specifications.						
2.17	Well Development- Within 7 days of completion of each well, but no sooner than 48 hours after cement grouting is completed, has the contractor developed the wells in accordance with section 33 11 53, 3.3.12 Well Development?						
2.18	WELL DECOMMISSIONING/ABANDONMENT- Has the contractor, for any reason, decommissioned/abandoned according to the requirements of the State of Florida, ASTM D5299, and the requirements of these specifications and as specified in section 33 11 53, 3.5 WELL DECOMMISSIONING/ABANDONMENT?						
2.19	WELL ACCEPTANCE- Has the contractor properly designed, constructed, installed, developed, and tested all monitoring wells according to the requirements of this specification so that they are suitable for the intended purpose?						
2.20	SITE CLEANUP- After completion of the Work, has the contractor removed tools, appliances, surplus materials, temporary drainage, rubbish, and debris incidental to Work and in accordance with section 33 11 53, 3.7 SITE CLEANUP?						
2.21	DOCUMENTATION AND QUALITY CONTROL REPORTS- Has the contractor submitted borehole logs in accordance with section 33 11 53, 3.8.1 Borehole Logs?						
2.22	Installation Diagrams- Has the contractor submitted installation diagram for each monitoring well within 14 working days of the completion of the installation in accordance with section 33 11 53, 3.8.2 Installation Diagrams?						
2.23	Well Development Records- Has the contractor prepared and submitted a monitoring well development record for each monitoring well installed under the supervision of the geologist present during well installation operations, within 14 working days of the completion of development in accordance with section 33 11 53, 3.8.3 Well Development Records?						

2.24	Well Decommissioning/Abandonment Records- Has the contractor submitted well decommissioning record, for each monitoring well abandoned, within 14 working days of the completion of the abandonment procedure in accordance with section 33 11 53, 3.8.4 Well Decommissioning/Abandonment Records?					
2.25	Survey Maps and Notes- Has the contractor prepared and submitted a tabulated list of all monitoring wells and monuments, copies of all field books, maps showing the locations, and elevations of all monitoring wells, and all computation sheets, consisting of the designated number of the well or monument, the X and Y coordinates, and all the required elevations within 30 working days after completion of the survey?					

IF ANY OF THE ABOVE REQUIREMENTS WERE MARKED NO, EXPLAIN:

3	POST-CONSTRUCTION INSPECTIONS	NA	QC REP (INITIALS	DATE	QC REP (INITIALS	DATE
3.1	Has the Final Punch List been completed and provided to the District for this DFOW?					
3.2	Has the Pre-Final Punch List been completed and submitted for this DFOW?					
3.3	Has the Final Follow-up Control Phase Inspection been performed for this DFOW?					
3.4	Has the Final Acceptance Inspection been performed for this DFOW?					
3.5	Have all asbuilts been recorded for this DFOW?					
3.6	WARRANTY: Has the warranty met the requirements specified in Section 01 61 03 EQUIPMENT AND MATERIALS?					

IF ANY OF THE ABOVE REQUIREMENTS WERE MARKED NO, EXPLAIN:

CONTRACTOR'S QC REPRESENTATIVE'S SIGNATURE	DATE	DISTRICT'S QA REPRESENTATIVE'S SIGNATURE	DATE

DFOW INSPECTION REPORT

PROJECT NAME: C-43 WEST BASIN STORAGE RESERVOIR
CONTRACT NUMBER: CN XXXXXXXXX
PACKAGE 4 - CIVIL WORKS

DEFINEABLE FEATURE OF WORK:	**ROOF SYSTEM INSTALLATION AND MISCELLANIOUS ROOF ASSESSORIES**		
PRIME CONTRACTOR:		**DATE:**	
PRIME CONTRACTOR SUPERVISOR:			
QUALITY CONTROL SYSTEMS MANAGER:			
QC SPECIALIST:			
SUBCONTRACTOR:			
ACTIVITY:			
ACTIVITY LOCATION:			
ACTIVITY SPECIFICATIONS:	**07 22 00, 07 52 00 & 07 60 00**		

1	PRE-CONSTRUCTION INSPECTIONS	NA	QC REP (INITIALS	DATE	QC REP (INITIALS	DATE
1.1	Have the DFOW specifications and drawings been reviewed with the understanding of specified requirements?					
1.2	Have the CQCP and AHA been reviewed with the comprehension and awareness of their Requirements?					
1.3	Have all pre-construction submittals and work plans been approved for this DFOW by the District?					
1.4	Have all RFIs been answered, reviewed and understood by the appropriate CQC Staff, Superintendant and required subcontractor?					
1.5	Has previous work been completed to enable this DFOW to begin without covering up non-compliance work?					
1.6	Has any and all preliminary work been completed in order to begin work for this DFOW?					
1.7	Have all as-builts been recorded from previous DFOW?					
1.8	Materials: Do all materials and equipment conform to the specification?					
1.9	Have all materials and equipment been handled and stored in accordance with the project specifications and the manufacturer's recommendations of requirements?					
1.10	Has the contractor received all required written approvals by the District to begin work for this DFOW?					
1.11	Has the Preparatory Control Phase Inspection been performed and properly documented for this DFOW?					

IF ANY OF THE ABOVE REQUIREMENTS WERE MARKED NO, EXPLAIN:

2	CONSTRUCTION INSPECTIONS	NA	QC REP (INITIALS	DATE	QC REP (INITIALS	DATE
2.1	Has the Initial Control Phase Inspection been performed for this DFOW?					
2.2	Are the DQCRs and Daily Safety Reports current and complete with the correct information documenting this DFOW?					
2.3	ROOF AND DECK INSULATION- Surface Inspection: Has the contractor, prior to installing vapor retarder and insulation, examined concrete decks to ensure it has been cleaned of debris and in conformance with manufacturer's recommendation and ensured surfaces receiving vapor retarder are free of projections that might puncture the vapor retarder?					
2.4	ROOF AND DECK INSULATION- Surface Preparation: Has the contractor corrected defects and inaccuracies in roof deck surface to eliminate poor drainage from hollow or low spots as specified in section 07 22 00, 3.1.2 Surface Preparation?					
2.5	INSTALLATION OF VAPOR RETARDER- Has the contractor installed vapor retarder in direct contact with roof deck surface, evenly mopping the secured insulation surface with asphalt before installing vapor retarder?					
2.6	INSULATION INSTALLATION- Has the contractor installed insulation in accordance with section 07 22 00, 3.3 INSULATION INSTALLATION?					
2.7	Protection of Applied Insulation- Has the contractor completely cover each day's installation of insulation with finished roofing specified in Section 07 52 00 MODIFIED BITUMINOUS MEMBRANE ROOFING on same day and in accordance with section 07 22 00, 3.4.1 Protection of Applied Insulation?					
2.8	ROOF AND DECK INSPECTION- Has the contractor established and maintain an inspection procedures to assure compliance of the installed roof insulation with contract requirements as specified in section 07 22 00, 3.5 INSPECTION?					
2.9	MODIFIED BITUMINOUS SHEET ROOFING SYSTEM- EXAMINATION: Has the contractor examined substrate surfaces to receive modified bitumen sheet roofing system and associated work and conditions under which roofing will be installed in accordance with section 07 52 00, 3.1 EXAMINATION?					
2.10	GENERAL INSTALLATION REQUIREMENTS- Has the contractor installed roofing system in strict accordance with Manufacturer's written specifications, roof deck Manufacturer's recommendations, accepted submitted documentation and in accordance with section 07 52 00, MODIFIED BITUMINOUS SHEET ROOFING SYSTEM?					
2.11	INSULATION INSTALLATION- Has the contractor installed insulation in accordance with section 07 52 00, 3.3 INSULATION INSTALLATION?					

2.12	MEMBRANE INSTALLATION- Has the contractor installed membrane in accordance with section 07 52 00, 3.4 MEMBRANE INSTALLATION?						
2.13	CLEANING- Has the contractor cleaned up debris, excess materials and equipment and removed from site and removed bitumens from surfaces other than those requiring bituminous roof coatings?						
2.14	PROTECTION- Has the contractor protected the MODIFIED BITUMINOUS SHEET ROOFING SYSTEM completed installation in accordance with section 07 52 00, 3.7 PROTECTION?						
2.15	PROTECTIVE ROOFING- At end of construction period, or at a time when remaining construction in no way affect or endanger roofing, has the inspection been conducted by the Contractor, a technical representative of the Manufacturer and District representative(s) to ascertain that the roofing system has been installed according to the Manufacturer's most current published specifications and details?						
2.16	FLASHING AND SHEET METAL INSTALLATION- Has the contractor installed the flashing, sheet metal and appurtenances in accordance with section 07 60 00, 3.1 INSTALLATION and adhering to Table I and Table II of paragraph 3.5.1 Procedure?						
2.17	PAINTING- Has the contractor field-painted sheet metal for separation of dissimilar materials in according with the contract and luminum surfaces solvent cleaned and given one coat of zinc-molybdate primer and one coat of aluminum paint?						
2.18	CLEANING- Has the contractor cleaned exposed sheet metal work at completion of installation, removing grease and oil films, handling marks, contamination from steel wool, fittings and drilling debris, and scrub-clean, while freeing the exposed metal surfaces of dents, creases, waves, scratch marks, and solder or weld marks?						
2.19	REPAIRS TO FINISH- Have scratches, abrasions, and minor surface defects of finish been repaired in accordance with the manufacturer's printed instructions and as approved and damaged surfaces caused by scratches, blemishes, and						
2.20	FIELD QUALITY CONTROL Procedures- Has the contractor submitted for approval, prior to start of roofing work, including a checklist of points to be observed, Quality Control procedures for sheet metal used in conjunction with roofing to assure compliance of the installed sheet metalwork with the contract requirements as specified in section 07 60 00, 3.5 FIELD QUALITY CONTROL?						
2.20	FIELD QUALITY CONTROL Documentation- Has the contractor documented the actual quality control observations and inspections? Has the contractor furnished a copy of the documentation to the District at the end of each day?						

IF ANY OF THE ABOVE REQUIREMENTS WERE MARKED NO, EXPLAIN:

3	POST-CONSTRUCTION INSPECTIONS	NA	QC REP (INITIALS	DATE	QC REP (INITIALS	DATE
3.1	Has the Final Punch List been completed and provided to the District for this DFOW?					
3.2	Has the Pre-Final Punch List been completed and submitted for this DFOW?					
3.3	Has the Final Follow-up Control Phase Inspection been performed for this DFOW?					
3.4	Has the Final Acceptance Inspection been performed for this DFOW?					
3.5	Have all asbuilts been recorded for this DFOW?					
3.6	PROTECTIVE ROOFING- Has a follow-up inspection been conducted by the contractor, a technical representative of the manufacturer, and District representative(s) 60 months after the warranty is issued to assure compliance of all parties to the warranty requirements?					
3.7	PROTECTIVE ROOFING- Has the contractor repaired or removed and replaced (as required) deteriorated or defective work found at time of above inspection to a condition free of damage and deterioration at time of Substantial Completion and according to warranty requirements?					
3.8	WARRANTY: Has the warranty met the requirements specified in Section 01 61 03 EQUIPMENT AND MATERIALS?					

IF ANY OF THE ABOVE REQUIREMENTS WERE MARKED NO, EXPLAIN:

CONTRACTOR'S QC REPRESENTATIVE'S SIGNATURE	DATE	DISTRICT'S QA REPRESENTATIVE'S SIGNATURE	DATE

DFOW INSPECTION REPORT

PROJECT NAME: C-43 WEST BASIN STORAGE RESERVOIR
CONTRACT NUMBER: CN XXXXXXXXX
PACKAGE 4 - CIVIL WORKS

DEFINEABLE FEATURE OF WORK:	SLABS ON GRADE		
PRIME CONTRACTOR:		**DATE:**	
PRIME CONTRACTOR SUPERVISOR:			
QUALITY CONTROL SYSTEMS MANAGER:			
QC SPECIALIST:			
SUBCONTRACTOR:			
ACTIVITY:			
ACTIVITY LOCATION:			
ACTIVITY SPECIFICATIONS:	03 11 13.00 10 & 03 39 00.10		

1	PRE-CONSTRUCTION INSPECTIONS	NA	QC REP (INITIALS	DATE	QC REP (INITIALS	DATE
1.1	Have the DFOW specifications and drawings been reviewed with the understanding of specified requirements?					
1.2	Have the CQCP and AHA been reviewed with the comprehension and awareness of their Requirements?					
1.3	Have all pre-construction submittals and work plans been approved for this DFOW by the District?					
1.4	Have all RFIs been answered, reviewed and understood by the appropriate CQC Staff, Superintendant and required subcontractor?					
1.5	Has previous work been completed to enable this DFOW to begin without covering up non-compliance work?					
1.6	Has any and all preliminary work been completed in order to begin work for this DFOW?					
1.7	Have all as-builts been recorded from previous DFOW?					
1.8	Materials: Do all materials and equipment conform to the specification?					
1.9	Have all materials and equipment been handled and stored in accordance with the project specifications and the manufacturer's recommendations of requirements?					
1.10	Has the contractor received all required written approvals by the District to begin work for this DFOW?					
1.11	Has the Preparatory Control Phase Inspection been performed and properly documented for this DFOW?					

IF ANY OF THE ABOVE REQUIREMENTS WERE MARKED NO, EXPLAIN:

2	CONSTRUCTION INSPECTIONS		NA	QC REP (INITIALS	DATE	QC REP (INITIALS	DATE
2.1	Has the Initial Control Phase Inspection been performed for this DFOW?						
2.2	Are the DQCRs and Daily Safety Reports current and complete with the correct information documenting this DFOW?						
2.3	CAST-IN-PLACE CONCRETE FORMING FORM TIES- Do all form ties that are being used during forming adhere to section 03 11 13.00 10, 2.3 and installed in compliance with ACI 301 section 2 with the surface tolerance in accordance with ACI 117?						
2.4	CAST-IN-PLACE CONCRETE FORMING FORM TIES- Are all form ties installed as specified in section 03 11 13.00 10, 3.1.1.1?						
2.5	CAST-IN-PLACE CONCRETE FORMING Taper Ties- After forms and taper ties are removed from wall, are tie holes plugged with neoprene plug in accordance with section 03 11 13.00 10, 3.1.1.2?						
2.6	CAST-IN-PLACE CONCRETE FORMING Dry-Pack of Taper Tie Holes- After installing plugs in tie holes, are tie hole surfaces coated with epoxy bonding agent and filled with dry-pack mortar as specified in sections 03 31 01.00 10 and 03 11 13.00 10, 3.1.1.2?						
2.7	CAST-IN-PLACE CONCRETE FORMING- Have all forms and embedded items been inspected in sufficient time prior to each concrete placement to certify to the District that they are ready to receive concrete and in accordance with 03 11 13.00 10, 3.2?						
2.8	CONCRETE REINFORCING REINFORCEMENT- Has the contractor fabricated and placed reinforcement steel and accessories as specified, as indicated, and as shown on approved shop drawings?						
2.9	CONCRETE REINFORCING WELDED-WIRE REINFORCEMENT PLACEMENT- Has the contractor placed welded-wire reinforcement in slabs as specified, as indicated, and as shown on approved shop drawings?						
2.10	CONCRETE REINFORCING DOWEL INSTALLATION- Has the contractor installed dowels in slabs on grade at locations indicated and at right angles to joint being doweled and as specified?						
2.11	CONCRETE REINFORCING TESTING AND INSPECTION- Are all formwork, installation of parts to be embedded, reinforcement steel, and preparation of surfaces involved been completed and accepted by the District at least 4 hours before placement of concrete?						
2.12	PREPARATION FOR PLACING CONCRETE Embedded Items- Before placement of concrete, did the contractor take care to determine that all embedded items were firmly and securely fastened in place as indicated on the drawings, or required and adhered to the specifications of section 03 31 01.00, 3.1.1?						

2.13	PREPARATION FOR PLACING CONCRETE Concrete on Earth Foundations- Has the contractor ensured that the earth surfaces upon which concrete is to be placed is clean, damp, and free from debris, frost, ice, and standing or running water? Prior to placement of concrete, was the earth foundation compacted in accordance with Section 31 00 00 EARTHWORK?						
2.14	PREPARATION FOR PLACING CONCRETE Concrete on Rock Foundations- Has the contractor ensured that the rock surfaces upon which concrete is to be placed is clean, free from oil, standing or running water, ice, mud, drummy rock, coating, debris, and loose, semidetached, or unsound fragment and adheres to section 03 31 01.00 10, 3.1.3?						
2.15	Construction Joint Treatment- Has the contractor submitted the method and equipment proposed for joint cleanup and waste disposal, for review and approval, submitted locations of construction joints and submitted sequencing plan for concrete pours?						
2.16	Construction Joint Treatment- Has the contractor conformed construction joint treatment in accordance with section 03 31 01.00 10, 3.1.4, including Joint Preparation, Air-Water Cutting, High-Pressure Water Jet, Wet Sandblasting and Waste Disposal?						
2.17	CONCRETE Pre-Pour Inspection Checklist- Before each concrete pour, has the contractor notified the District 24 hours before the scheduled concrete pour and that they are ready for a joint pre-pour inspection and has the inspection successfully been performed with both parties signing off on the pre-pour inspection checklist?						
2.18	CONVEYING AND PLACING CONCRETE Hot-Weather Requirements- Has contractor placed concrete in hot weather in accordance with ACI 305R?						
2.19	CONVEYING AND PLACING CONCRETE- Has the contractor conveyed and place concrete in accordance with ACI 301, Section 5 and in accordance with section 03 31 01.00 10, 3.2 and the drawings?						
2.20	CAST-IN-PLACE CONCRETE TESTS AND INSPECTIONS General- Has the contractor performed the inspections and tests specified in section 03 31 01.00 10, 3.5 and, based upon the results of these inspections and tests, taken the action required and submit reports as required? (When, in the opinion of the District, the concreting operation is out of control, cease concrete placement.)						
2.21	CAST-IN-PLACE CONCRETE TESTS AND INSPECTIONS General- Has the contractor located the laboratory performing the tests on site and conformed to ASTM C1077?						
2.22	CAST-IN-PLACE CONCRETE TESTS AND INSPECTIONS Fine Aggregates- Grading: At least once during each shift when the concrete plant is operating, has the contractor performed one sieve analysis and fineness modulus determination in accordance with ASTM C136/C136M and COE CRD-C 104 for the fine aggregate or for each size range of fine aggregate if it is batched in more than one size or classification and in accordance with section 03 31 01.00 10, 3.5.2.1.1 and 3.5.2.1.2?						

2.23	CAST-IN-PLACE CONCRETE TESTS AND INSPECTIONS Fine Aggregates- Moisture Content Testing: Has the contractor performed testing of the moisture content of the material in accordance with section 03 31 01.00 10, 3.5.2.1.3 and 3.5.2.1.4?						
2.24	CAST-IN-PLACE CONCRETE TESTS AND INSPECTIONS Coarse Aggregates- Grading: At least once during each shift in which the concrete plant is operating, has the contractor conducted a sieve analysis in accordance with ASTM C136/C136M for each size of coarse aggregate and in accordance with section 03 31 01.00 10, 3.5.2.2.1 and 3.5.2.2.2?						
2.25	CAST-IN-PLACE CONCRETE TESTS AND INSPECTIONS Coarse Aggregates- Moisture Content Testing: Has the contractor Made a test for moisture content of each size group of coarse aggregate at least twice per week and in accordance with section 03 31 01.00 10, 3.5.2.2.3 and 3.5.2.2.4?						
2.26	CAST-IN-PLACE CONCRETE TESTS AND INSPECTIONS Frequency of Quality Tests- Thirty days prior to the start of concrete placement, has the contractor performed all tests for aggregate quality listed in the Aggregate Quality Frequency Schedule of section 03 31 01.00 10, 3.5.2.3.1?						
2.27	CAST-IN-PLACE CONCRETE TESTS AND INSPECTIONS Frequency of Quality Tests- In addition, after the start of concrete placement, has the contractor performed tests for aggregate quality in accordance with the Aggregate Quality Frequency Schedule of section 03 31 01.00 10, 3.5.2.3.1? Were the samples tested after the start of concrete placement immediately prior to entering the concrete mixer?						
2.28	CAST-IN-PLACE CONCRETE TESTS AND INSPECTIONS Corrective Action for Aggregate Quality- Did the contractor adhere to section 03 31 01.00 10, 3.5.2.3.2 if the result of a quality test failed to meet the requirements for quality?						
2.29	CAST-IN-PLACE CONCRETE TESTS AND INSPECTIONS Scales- Has the contractor adhered to section 03 31 01.00, 3.5.2.4 including Weighing Accuracy, Batching and Recording Accuracy and Scales Corrective Actions?						
2.30	CAST-IN-PLACE CONCRETE TESTS AND INSPECTIONS Batch-Plant Control- Has the contractor continuously controlled the measurement of all constituent materials including cementitious materials, each size of aggregate, water, and admixtures as specified in section 03 31 01.00 10, 3.5.2.5?						
2.31	CAST-IN-PLACE CONCRETE TESTS AND INSPECTIONS Concrete Mixture- Air Content Testing: Has the contractor conducted Air Content Testing when test specimens are fabricated, including required additional testing, as well as plotting of the Air Content Testing as specified in section 03 31 01.00 10, 3.5.2.6.1 and 3.5.2.6.2?						
2.32	CAST-IN-PLACE CONCRETE TESTS AND INSPECTIONS Concrete Mixture- Slump Testing: Has the contractor conducted Slump Testing when test specimens are fabricated, including required additional testing, as well as plotting of the Slump Testing as specified in section 03 31 01.00 10, 3.5.2.6.3 and 3.5.2.6.4?						

2.33	CAST-IN-PLACE CONCRETE TESTS AND INSPECTIONS Concrete Mixture- Temperature: Has the contractor measured the temperature of the concrete when compressive strength specimens in paragraph entitled, "Compressive-Strength Specimens," are fabricated in accordance with ASTM C1064/C1064M?						
2.34	CAST-IN-PLACE CONCRETE TESTS AND INSPECTIONS Concrete Mixture- Compressive Strength: Has the contractor obtained fresh concrete samples and tested concrete for Compressive Strength during placement for testing, making 6 test cylinders (2 at 7 days, 2 at 28 days and 2 for hold) for each pour and for every 100 cubic yards of concrete placed in the same day thereafter?						
2.35	CAST-IN-PLACE CONCRETE TESTS AND INSPECTIONS Vibrators Testing- Has the contractor determined the frequency and amplitude of each vibrator in accordance with COE CRD-C 521 prior to initial use and at least once a month when concrete is being placed as specified in section 03 31 01.00 10, 3.5.2.9.1 and 3.5.2.9.2?						
2.36	CAST-IN-PLACE CONCRETE TESTS AND INSPECTIONS Mixer Uniformity- Stationary Mixers: Prior to the start of concrete placing and once every 6 months when concrete is being placed, or once for every 75,000 cubic yards of concrete placed, whichever results in the longest time interval, has the contractor determined uniformity of concrete mixing in accordance with ASTM C94/C94M?						
2.37	CAST-IN-PLACE CONCRETE TESTS AND INSPECTIONS Mixer Uniformity- Truck Mixers: Prior to the start of concrete placing and at least once every 6 months when concrete is being placed, has the contractor determined uniformity of concrete in accordance with ASTM C94/C94M and as specified in section 03 31 01.00 10, 3.5.2.10.2?						
2.38	CAST-IN-PLACE CONCRETE TESTS AND INSPECTIONS Reports- Has the contractor reported all results of tests or inspections conducted informally as they are completed and in writing daily as specified in section 03 31 01.00 10, 3.5.3?						
2.39	CONCRETE FINISHING- Has the contractor identified and finished the concrete surface as specified in section 03 35 00.00 10, Part 3?						
2.40	CURING AND PROTECTION- Has the contractor cured, a minimum of seven days, and protected concrete in accordance with ACI 301 Section 5 and as specified in section 03 39 00.00 10, 3.1 Curing And Protection?						
2.41	TESTING AND INSPECTION FOR CQC- Moist Curing Inspections: Has the contractor's CQCSM, at least once each shift, and not less than twice per day on both work and non-work days, inspected all areas subject to moist curing, noted and recorded the surface moisture condition? (See 3.2.2 Moist Curing Corrective Action.)						
2.42	TESTING AND INSPECTION FOR CQC- Membrane Curing Inspection: Apply no curing compound until the Contractor has verified that the compound is properly mixed and ready for spraying. At the end of each operation, has the contractor CQCSM estimated the quantity of compound used by measurement of the container and the area of concrete surface covered, compute the rate of coverage in square feet/gallon, and note whether or not coverage is uniform? (See 3.2.4 Membrane Curing Corrective Action.)						

2.43	TESTING AND INSPECTION FOR CQC- Sheet Curing Inspection: At least once each shift and once per day on non-work days, has the CQCSM inspected all areas being cured using impervious sheets, noted and recorded the condition of the covering and the tightness of the laps and tapes? (See 3.2.6 Sheet Curing Corrective Action.)					

IF ANY OF THE ABOVE REQUIREMENTS WERE MARKED NO, EXPLAIN:

3	POST-CONSTRUCTION INSPECTIONS	NA	QC REP (INITIALS	DATE	QC REP (INITIALS	DATE
3.1	Has the Final Punch List been completed and provided to the District for this DFOW?					
3.2	Has the Pre-Final Punch List been completed and submitted for this DFOW?					
3.3	Has the Final Follow-up Control Phase Inspection been performed for this DFOW?					
3.4	Has the Final Acceptance Inspection been performed for this DFOW?					
3.5	Have all asbuilts been recorded for this DFOW?					
3.6	WARRANTY: Has the warranty met the requirements specified in Section 01 61 03 EQUIPMENT AND MATERIALS?					

IF ANY OF THE ABOVE REQUIREMENTS WERE MARKED NO, EXPLAIN:

CONTRACTOR'S QC REPRESENTATIVE'S SIGNATURE	DATE	DISTRICT'S QA REPRESENTATIVE'S SIGNATURE	DATE

DFOW INSPECTION REPORT

PROJECT NAME: C-43 WEST BASIN STORAGE RESERVOIR
CONTRACT NUMBER: CN XXXXXXXXX
PACKAGE 4 - CIVIL WORKS

DEFINEABLE FEATURE OF WORK:	**WALLS AND COLUMNS - Concrete Finishing & Curing**		
PRIME CONTRACTOR:		**DATE:**	
PRIME CONTRACTOR SUPERVISOR:			
QUALITY CONTROL SYSTEMS MANAGER:			
QC SPECIALIST:			
SUBCONTRACTOR:			
ACTIVITY:			
ACTIVITY LOCATION:			
ACTIVITY SPECIFICATIONS:	**03 35 00.00 10 & 03 39 00.00 10**		

1	PRE-CONSTRUCTION INSPECTIONS	NA	QC REP (INITIALS	DATE	QC REP (INITIALS	DATE
1.1	Have the DFOW specifications and drawings been reviewed with the understanding of specified requirements?					
1.2	Have the CQCP and AHA been reviewed with the comprehension and awareness of their Requirements?					
1.3	Have all pre-construction submittals and work plans been approved for this DFOW by the District?					
1.4	Have all RFIs been answered, reviewed and understood by the appropriate CQC Staff, Superintendant and required subcontractor?					
1.5	Has previous work been completed to enable this DFOW to begin without covering up non-compliance work?					
1.6	Has any and all preliminary work been completed in order to begin work for this DFOW?					
1.7	Have all as-builts been recorded from previous DFOW?					
1.8	Materials: Do all materials and equipment conform to the specification?					
1.9	Have all materials and equipment been handled and stored in accordance with the project specifications and the manufacturer's recommendations of requirements?					
1.10	Has the contractor received all required written approvals by the District to begin work for this DFOW?					
1.11	Has the Preparatory Control Phase Inspection been performed and properly documented for this DFOW?					

IF ANY OF THE ABOVE REQUIREMENTS WERE MARKED NO, EXPLAIN:

2	CONSTRUCTION INSPECTIONS	NA	QC REP (INITIALS	DATE	QC REP (INITIALS	DATE
2.1	Has the Initial Control Phase Inspection been performed for this DFOW?					
2.2	Are the DQCRs and Daily Safety Reports current and complete with the correct information documenting this DFOW?					
2.3	Finished Form Surfaces: Have the formed and unformed concrete surface finishes conformed to Section 03 35 00.00 10 as directed for each type of finish to be used and adhering to the "Unformed Surface Finish Schedule" provided?					
2.4	Repairs: Have all repairs been performed in accordance with ACI 301, Section 5?					
2.5	Exterior Slabs and Related Items -Onsite Pavements: Has the contractor performed the finish of onsite pavements in accordance with paragraph 3.4.1.1 of Section 03 35 00.00 10?					
2.6	Exterior Slabs and Related Items -Concrete Roadways: Has the contractor performed the finish of concrete roadways in accordance with paragraph 3.4.1.2 of Section 03 35 00.00 10?					
2.7	Exterior Slabs and Related Items -Sidewalks: Have lightly broomed finishes been applied to sidewalks?					
2.8	Exterior Slabs and Related Items Curbs and Gutters: Have stiff bristled brush finishes been applied for exposed surfaces?					
2.9	Curing and Protection: Have curing and protection of the concrete been performed in accordance with ACI 301 Section 5 and as specified in Section 03 39 00.00 10, describing Liquid Evaporation Retardant, General Curing, Sprayed Membrane Curing Compound, Sheet Membrane Compound and Water Curing?					
2.10	Curing and Protection: Has concrete been allowed to cure for at least 7 days from placement completion, dependent upon inspections of the curing process as described in					
2.11	Curing and Protection: Has the contractor's QC Staff performed and documented the required testing and inspections for the curing process?					

IF ANY OF THE ABOVE REQUIREMENTS WERE MARKED NO, EXPLAIN:

3	POST-CONSTRUCTION INSPECTIONS	NA	QC REP (INITIALS	DATE	QC REP (INITIALS	DATE
3.1	Has the Final Punch List been completed and provided to the District for this DFOW?					
3.2	Has the Pre-Final Punch List been completed and submitted for this DFOW?					
3.3	Has the Final Follow-up Control Phase Inspection been performed for this DFOW?					
3.4	Has the Final Acceptance Inspection been performed for this DFOW?					
3.5	Have all asbuilts been recorded for this DFOW?					
3.6	WARRANTY: Has the warranty met the requirements specified in Section 01 61 03 EQUIPMENT AND MATERIALS?					

IF ANY OF THE ABOVE REQUIREMENTS WERE MARKED NO, EXPLAIN:

CONTRACTOR'S QC REPRESENTATIVE'S SIGNATURE	DATE	DISTRICT'S QA REPRESENTATIVE'S SIGNATURE	DATE

DFOW INSPECTION REPORT

PROJECT NAME: C-43 WEST BASIN STORAGE RESERVOIR
CONTRACT NUMBER: CN XXXXXXXXX
PACKAGE 4 - CIVIL WORKS

DEFINEABLE FEATURE OF WORK:	**WALLS AND COLUMNS - Concrete Forming, Reinforcement & Accessories**		
PRIME CONTRACTOR:		**DATE:**	
PRIME CONTRACTOR SUPERVISOR:			
QUALITY CONTROL SYSTEMS MANAGER:			
QC SPECIALIST:			
SUBCONTRACTOR:			
ACTIVITY:			
ACTIVITY LOCATION:			
ACTIVITY SPECIFICATIONS:	**03 11 13.00 10, 03 20 00.00 10, 03 15 00.00 10**		

1	PRE-CONSTRUCTION INSPECTIONS	NA	QC REP (INITIALS	DATE	QC REP (INITIALS	DATE
1.1	Have the DFOW specifications and drawings been reviewed with the understanding of specified requirements?					
1.2	Have the CQCP and AHA been reviewed with the comprehension and awareness of their Requirements?					
1.3	Have all pre-construction submittals and work plans been approved for this DFOW by the District?					
1.4	Have all RFIs been answered, reviewed and understood by the appropriate CQC Staff, Superintendant and required subcontractor?					
1.5	Has previous work been completed to enable this DFOW to begin without covering up non-compliance work?					
1.6	Has any and all preliminary work been completed in order to begin work for this DFOW?					
1.7	Have all as-builts been recorded from previous DFOW?					
1.8	Materials: Do all materials and equipment conform to the specification?					
1.9	Have all materials and equipment been handled and stored in accordance with the project specifications and the manufacturer's recommendations of requirements?					
1.10	Has the contractor received all required written approvals by the District to begin work for this DFOW?					
1.11	Has the Preparatory Control Phase Inspection been performed and properly documented for this DFOW?					

IF ANY OF THE ABOVE REQUIREMENTS WERE MARKED NO, EXPLAIN:

2	CONSTRUCTION INSPECTIONS		NA	QC REP (INITIALS	DATE	QC REP (INITIALS	DATE
2.1	Has the Initial Control Phase Inspection been performed for this DFOW?						
2.2	Are the DQCRs and Daily Safety Reports current and complete with the correct information documenting this DFOW?						
2.3	Formwork -General: Has all formwork installations complied with ACI 301 Section 2 with surface tolerances in accordance with ACI 117?						
2.4	Reinforcement -Placement: Is reinforcement installed free from loose rust and scale, dirt, oil or other deleterious coating that could reduce bond with the concrete and placed in accordance with section 03 20 00.00 10, 3.1.1 Placement with the tolerances of bar spacing and concrete cover conforming ACI 117?						
2.5	Reinforcement -Splicing and Lap Splicing: Have splices of reinforcement conformed to ACI 301 or as indicated on the drawings and made only as required or indicated and adhering to Section 03 20 00.00 10, 3.1.3 Splicing? Have Lapped bars been placed in accordance with paragraph 3.1.3.1?						
2.6	Reinforcement -Welded-Wire Reinforcement Placement: Are welded-wire reinforcement placed in slabs and at joints as indicated on the drawings and placed continuous between expansion, construction and contraction joints? Are lap splices placed in accordance with 3.2 WELDED-WIRE REINFORCEMENT PLACEMENT of section 03 20 00.00 10?						
2.7	Reinforcement -Dowel Installation: Are dowels installed in slabs on grade at locations indicated on the drawings and at right angles to joint being doweled, conforming to 3.3 DOWEL INSTALLATION of section 03 20 00.00 10?						
2.8	Formwork -Form Ties: Have tie holes been filled in accordance with 3.1.1.1 Form ties of section 03 11 13.00 10?						
2.9	Formwork -Taper Ties: After forms and taper ties are removed from wall, have ties holes been plugged with neoprene plugs in accordance with paragraph 3.1.1.2 of section 03 11 13.00 10?						
2.10	Formwork -Dry-Pack of Taper Tie Holes: After installing plugs in tie holes, have the tie hole surfaces been coated with epoxy bonding agent and filled with dry-pack mortar as specified in Section 03 31 01.00 10 and in accordance with 3.1.1.2 Taper ties of section 03 11 13.00 10?						
2.11	Concrete Accessories -Installation: Has the contractor submitted the shop drawing, providing joint locations and details, including materials and methods of installation of joint fillers and waterstops, as specified and indicated?						
2.12	Concrete Accessories -Installation: Has the contractor avoided any fixed metal being continuous through an expansion or contraction joint?						

2.13	Concrete Accessories -Contraction Joints: Have contraction joints been constructed in accordance with 3.1.1 Contraction Joints of section 03 15 00.00 10?						
2.14	Concrete Accessories -Joint Strips: Has the contractor provided strips of the required dimensions and as long as practical and installed the joint strips in accordance with 3.1.1.1 Joint Strips of section 03 15 00.00 10?						
2.15	Concrete Accessories -Sawed Joints: Have joints been sawed in a timely manner to prevent uncontrolled cracking in the slab but without appreciable spalling and in accordance with 3.1.1.2 Sawed Joints of section 03 15 00.00 10?						
2.16	Concrete Accessories -Bond Breaker: Has the contractor coated joints requiring bond breakers with curing compound or with bituminous paint, yet protecting waterstops during application from being coated?						
2.17	Concrete Accessories -Expansion Joints: Has the contractor used preformed expansion joint filler in expansions and isolation joints in slabs around columns and between slabs on grade and vertical surfaces where indicated on the drawings and in conformance with 3.1.2 Expansion Joints of section 03 15 00.00 10?						
2.18	Concrete Accessories -Joint Sealant: Have the sawed contraction joints and expansion joints been filled with joint sealant, unless otherwise shown and as recommended by the manufacturer of the sealant and in accordance with 3.1.3 Joint Sealant of section 03 15 00.00 10?						
2.19	Concrete Accessories -Waterstops, Installation and Splices: Have waterstops been installed at the locations shown on the drawings to form a continuous water-tight diaphragm and have provisions been made to support and completely protect the waterstops during the progress of work? Have splices been accomplished with certified trained personnel using approved equipment and procedures?						
2.20	Concrete Accessories -Non-Metallic: Have fittings been shop made using a machine specifically designed to mechanically weld the waterstops and made in accordance with 3.2.1 Non-Metallic of section 03 15 00.00 10?						
2.21	Concrete Accessories -Polyvinyl Chloride Waterstop: Have the polyvinyl chloride waterstops been made in accordance with the directions of 3.2.1.1 Polyvinyl Chloride Waterstop and the Quality Control tolerances of 3.2.1.2 Quality Control of section 03 15 00.00 10?						
2.22	Concrete Accessories -Non-Metallic Hydrophilic Waterstop Installation: Have non-metallic hydrophilic waterstops been installed in conformance with paragraph 3.2.2 of section 03 15 00.00 10?						
2.23	Concrete Accessories -Preformed Plastic Adhesive Installation: Have preformed plastic adhesive waterstops been installed employing a prime, peel, place and pour procedure and conforming to 3.2.3 Preformed Plastic Adhesive Installation of section 03 15 00.00 10?						

IF ANY OF THE ABOVE REQUIREMENTS WERE MARKED NO, EXPLAIN:

3	POST-CONSTRUCTION INSPECTIONS	NA	QC REP (INITIALS	DATE	QC REP (INITIALS	DATE
3.1	Has the Final Punch List been completed and provided to the District for this DFOW?					
3.2	Has the Pre-Final Punch List been completed and submitted for this DFOW?					
3.3	Has the Final Follow-up Control Phase Inspection been performed for this DFOW?					
3.4	Has the Final Acceptance Inspection been performed for this DFOW?					
3.5	Have all asbuilts been recorded for this DFOW?					
3.6	WARRANTY: Has the warranty met the requirements specified in Section 01 61 03 EQUIPMENT AND MATERIALS?					

IF ANY OF THE ABOVE REQUIREMENTS WERE MARKED NO, EXPLAIN:

CONTRACTOR'S QC REPRESENTATIVE'S SIGNATURE	DATE	DISTRICT'S QA REPRESENTATIVE'S SIGNATURE	DATE

DFOW INSPECTION REPORT

PROJECT NAME: C-43 WEST BASIN STORAGE RESERVOIR
CONTRACT NUMBER: CN XXXXXXXXX
PACKAGE 4 - CIVIL WORKS

DEFINEABLE FEATURE OF WORK:	**WALLS AND COLUMNS - Structural Steel**		
PRIME CONTRACTOR:		**DATE:**	
PRIME CONTRACTOR SUPERVISOR:			
QUALITY CONTROL SYSTEMS MANAGER:			
QC SPECIALIST:			
SUBCONTRACTOR:			
ACTIVITY:			
ACTIVITY LOCATION:			
ACTIVITY SPECIFICATIONS:	**05 12 00**		

1	PRE-CONSTRUCTION INSPECTIONS	NA	QC REP (INITIALS	DATE	QC REP (INITIALS	DATE
1.1	Have the DFOW specifications and drawings been reviewed with the understanding of specified requirements?					
1.2	Have the CQCP and AHA been reviewed with the comprehension and awareness of their Requirements?					
1.3	Have all pre-construction submittals and work plans been approved for this DFOW by the District?					
1.4	Have all RFIs been answered, reviewed and understood by the appropriate CQC Staff, Superintendant and required subcontractor?					
1.5	Has previous work been completed to enable this DFOW to begin without covering up non-compliance work?					
1.6	Has any and all preliminary work been completed in order to begin work for this DFOW?					
1.7	Have all as-builts been recorded from previous DFOW?					
1.8	Materials: Do all materials and equipment conform to the specification?					
1.9	Have all materials and equipment been handled and stored in accordance with the project specifications and the manufacturer's recommendations of requirements?					
1.10	Has the contractor received all required written approvals by the District to begin work for this DFOW?					
1.11	Has the Preparatory Control Phase Inspection been performed and properly documented for this DFOW?					

IF ANY OF THE ABOVE REQUIREMENTS WERE MARKED NO, EXPLAIN:

2	CONSTRUCTION INSPECTIONS	NA	QC REP (INITIALS	DATE	QC REP (INITIALS	DATE
2.1	Has the Initial Control Phase Inspection been performed for this DFOW?					
2.2	Are the DQCRs and Daily Safety Reports current and complete with the correct information documenting this DFOW?					
2.3	ERECTION: a. Except as indicated in item b. below, is the erection of structural steel in accordance with the applicable provisions of AISC 325? {b. For low-rise structural steel buildings (60 feet tall or less and a maximum of 2 stories), the structure must be erected in accordance with AISC DESIGN GUIDE 10.}					
2.4	ERECTION: After final positioning of steel members, are full bearing under base plates and bearing plates provide using nonshrink grout with the nonshrink grout placed in accordance with the manufacturer's instructions?					
2.5	CONNECTIONS: Except as modified in this section, connections not detailed must be designed in accordance with AISC 360. Build connections into existing work. Do not tighten anchor bolts set in concrete with impact torque wrenches. Holes must not be cut or enlarged by burning. Bolts, nuts, and washers must be clean of dirt and rust, and lubricated immediately prior to installation.					
2.6	Common Grade Bolts: Are ASTM A307 bolts tightened to a "snug tight" fit? ("Snug tight" is the tightness that exists when plies in a joint are in firm contact. If firm contact of joint plies cannot be obtained with a few impacts of an impact wrench, or the full effort of a man using a spud wrench, contact the District for further instructions.)					
2.7	High-Strength Bolts: Have direct tension indicator washers been provide in all ASTM A325 bolted connections and in accordance with 3.2.2 High-Strength Bolts of section 05 12 00?					
2.8	Installation of Direct Tension Indicator Washers (DTIW): Where possible, are the DTIWs installed under the bolt heads and are the nuts tightened in accordance with 3.2.2.1 Installation of Direct Tension Indicator Washers (DTIW) of section 05 12 00?					
2.9	GAS CUTTING: Use of gas-cutting torch in the field for correcting fabrication errors will not be permitted on any major member in the structural framing. Use of a gas cutting torch will be permitted on minor members not under stress only after approval has been obtained from the District.					
2.10	Is welding in accordance with AWS D1.1/D1.1M, the approved welding procedure specifications (WPS) for all welding and in accordance with 3.4 WELDING of section 05 12 00?					
2.11	SHOP PRIMER REPAIR: Is repair shop primer in accordance with the paint manufacturer's recommendation for surfaces damaged by handling, transporting, cutting, welding, or bolting?					

2.12	Field Priming: Has steel, that is exposed to the weather, or located in building areas without HVAC for control of relative humidity, been field primed? (After erection, the field bolt heads and nuts, field welds, and any abrasions in the shop coat must be cleaned and primed with paint of the same quality as that used for the shop coat.)						
2.13	GALVANIZING REPAIR: Have damages been repaired to galvanized coatings using ASTM A780/A780M zinc rich paint for galvanizing damaged by handling, transporting, cutting, welding, or bolting? (Do not heat surfaces to which repair paint has been applied.)						
2.14	FIELD QUALITY CONTROL: The District must be notified in writing of defective welds, bolts, nuts, and washers within 7 working days of the date of the inspection.						
2.15	Welds -Visual Inspection: Has the AWS-certified welding inspectors inspected proper preparation, size, gaging location, and acceptability of welds; identification marking; operation and current characteristics of welding sets in use for fabrication and erection inspections and testings and verification inspections?						
2.16	Welds -Nondestructive Testing: Has the AWS-certified welding inspectors performed nondestructive testing in accordance with AWS D1.1/D1.1M and 3.7.1.2 Nondestructive Testing of section 05 12 00? Has the inspection report been submitted to the District?						
2.17	Direct Tension Indicator Washer Compression: Have the direct tension indicator washers been tested in place, by the AWS-certified welding inspectors to verify that they have been compressed sufficiently to provide the 0.015 inch gap when the direct tension indicator washer is placed under the bolt head and the nut is tightened, and to provide the 0.005 inch gap when the direct tension indicator washer is placed under the turned element, as required by ASTM F959? Has the direct tension indicator washer inspection reports been submitted to the District?						
2.18	High-Strength Bolts -Testing Bolt, Nut, and Washer Assemblies: Has a representative of the manufacturer or supplier been present to ensure that the fasteners are properly used, and to demonstrate that the fastener assemblies supplied satisfy the specified requirements? Have the bolt testing reports been submitted to the District?						
2.19	High-Strength Bolts -Inspection: Has the AWS-certified welding inspector monitored the work to ensure the testing procedures are routinely followed on joints that are specified to be fully tensioned?						

IF ANY OF THE ABOVE REQUIREMENTS WERE MARKED NO, EXPLAIN:

3	POST-CONSTRUCTION INSPECTIONS	NA	QC REP (INITIALS	DATE	QC REP (INITIALS	DATE
3.1	Has the Final Punch List been completed and provided to the District for this DFOW?					
3.2	Has the Pre-Final Punch List been completed and submitted for this DFOW?					
3.3	Has the Final Follow-up Control Phase Inspection been performed for this DFOW?					
3.4	Has the Final Acceptance Inspection been performed for this DFOW?					
3.5	Have all asbuilts been recorded for this DFOW?					
3.6	WARRANTY: Has the warranty met the requirements specified in Section 01 61 03 EQUIPMENT AND MATERIALS?					

IF ANY OF THE ABOVE REQUIREMENTS WERE MARKED NO, EXPLAIN:

CONTRACTOR'S QC REPRESENTATIVE'S SIGNATURE	DATE	DISTRICT'S QA REPRESENTATIVE'S SIGNATURE	DATE

DFOW INSPECTION REPORT

PROJECT NAME: C-43 WEST BASIN STORAGE RESERVOIR
CONTRACT NUMBER: CN XXXXXXXXX
PACKAGE 4 - CIVIL WORKS

DEFINEABLE FEATURE OF WORK:	INSTALLATION OF SHEETPILE WINGWALLS		
PRIME CONTRACTOR:		**DATE:**	
PRIME CONTRACTOR SUPERVISOR:			
QUALITY CONTROL SYSTEMS MANAGER:			
QC SPECIALIST:			
SUBCONTRACTOR:			
ACTIVITY:			
ACTIVITY LOCATION:			
ACTIVITY SPECIFICATIONS:	31 41 16 & 05 12 00		

1	PRE-CONSTRUCTION INSPECTIONS	NA	QC REP (INITIALS	DATE	QC REP (INITIALS	DATE
1.1	Have the DFOW specifications and drawings been reviewed with the understanding of specified requirements?					
1.2	Have the CQCP and AHA been reviewed with the comprehension and awareness of their Requirements?					
1.3	Have all pre-construction submittals and work plans been approved for this DFOW by the District?					
1.4	Have all RFIs been answered, reviewed and understood by the appropriate CQC Staff, Superintendant and required subcontractor?					
1.5	Has previous work been completed to enable this DFOW to begin without covering up non-compliance work?					
1.6	Has any and all preliminary work been completed in order to begin work for this DFOW?					
1.7	Have all as-builts been recorded from previous DFOW?					
1.8	Materials: Do all materials and equipment conform to the specification?					
1.9	Have all materials and equipment been handled and stored in accordance with the project specifications and the manufacturer's recommendations of requirements?					
1.10	Has the contractor received all required written approvals by the District to begin work for this DFOW?					
1.11	Has the Preparatory Control Phase Inspection been performed and properly documented for this DFOW?					

IF ANY OF THE ABOVE REQUIREMENTS WERE MARKED NO, EXPLAIN:

2	CONSTRUCTION INSPECTIONS		NA	QC REP (INITIALS	DATE	QC REP (INITIALS	DATE
2.1	Has the Initial Control Phase Inspection been performed for this DFOW?						
2.2	Are the DQCRs and Daily Safety Reports current and complete with the correct information documenting this DFOW?						
2.3	STRUCTURAL STEEL- Certifications: Prior to welding, has the contractor submitted certification for each welder stating the type of welding and positions qualified for, the code and procedure qualified under, date qualified, and the firm and individual certifying the qualification tests?						
2.4	STRUCTURAL STEEL- CONNECTIONS: Has the contractor used the appropriate connections and installed connections as specified in section 05 12 00, 3.2 Connections?						
2.5	STRUCTURAL STEEL- Has the ontractor performed Gas Cutting and Welding in accordance with the specifications of this contract?						
2.6	STRUCTURAL STEEL- Welds: (Visual Inspection) Has the contractor furnished the services of AWS-certified welding inspectors for fabrication and erection inspection and testing and verification inspections?						
2.7	METAL SHEET PILING- Placing: Have pilings placed in cofferdam cells and connecting arcs been picked up and completely threaded to demonstrate that they slide freely in interlock?						
2.8	METAL SHEET PILING- Placing: Have pilings carefully located as indicated and placed in accordance with section 31 41 16, 3.2.2.1b Placing?						
2.9	METAL SHEET PILING- Placing: Have temporary wales, templates, or guide structures been provided to ensure that the pilings are placed and driven to the correct alignment and in accordance with 31 41 16, 3.2.2.1c Placing?						
2.10	METAL SHEET PILING- Driving: Prior to driving pilings in water, has the contractor painted a horizontal line on both sides of each piling at a fixed distance from the bottom so that it will be visible above the water line after installation?						
2.11	METAL SHEET PILING- Driving: Has the contractor driven pilings with the proper size hammer and by approved methods so as not to subject the pilings to damage and to ensure proper interlocking throughout their lengths?						
2.12	METAL SHEET PILING- Driving: Has the contractor driven the pilings in accordance with section 31 41 16, 3.2.2.2 Driving?						

2.13	METAL SHEET PILING- Cutting-Off and Splicing: Have pilings driven to refusal or to the point where additional penetration cannot be attained and are extending above the required top elevation in excess of the specified tolerance been cut off to the required elevation and in accordance with section 31 41 16, 3.2.3 Cuutin-Off and Splicing?						
2.14	METAL SHEET PILING- Cutting-Off and Splicing: Have pilings been spliced, as required, to drive them to depths greater than shown and extend them up to the required top elevation?						
2.15	METAL SHEET PILING- Inspection of Driven Piling: Has the contractor inspected all piles for compliance with tolerance requirements and brought any unusual problems which have occurred to the attention of the Construction Manager?						
2.16	METAL SHEET PILING- Inspection of Driven Piling: Has the contractor inspected the interlocked joints of driven pilings extending above ground? (Pilings found to be out of interlock shall be removed and replaced.)						
2.17	METAL SHEET PILING- Inspection of Driven Piling: Has the contractor used divers to inspect underwater interlocked joints of cofferdam sheet piling?						
2.18	METAL SHEET PILING- Inspection of Driven Piling: Has the inspection of cofferdams been performed after driving is completed, prior to filling each cell and connecting arc, and within 48 hours after filling each cell and arc?						
2.19	METAL SHEET PILING- Pulling and Redriving: Has the contractor performed pulling and redriving activities as specified in section 31 41 16, 3.2.5 Pulling and Redriving?						
2.20	METAL SHEET PILING- REMOVAL: Has the contractor performed the removal of sheet pilings by pulling, sorting, cleaning the interlocks, inventorying and storing previously installed sheet pilings as shown, directed and in accordance with section 31 41 16, 3.3 Removal?						
2.21	METAL SHEET PILING- INSTALLATION RECORDS: Has the contractor maintained a pile driving record for each sheetpile driven in accordance with section 31 41 16, 3.4 INSTALLATION RECORDS?						

IF ANY OF THE ABOVE REQUIREMENTS WERE MARKED NO, EXPLAIN:

3	POST-CONSTRUCTION INSPECTIONS	NA	QC REP (INITIALS	DATE	QC REP (INITIALS	DATE
3.1	Has the Final Punch List been completed and provided to the District for this DFOW?					
3.2	Has the Pre-Final Punch List been completed and submitted for this DFOW?					
3.3	Has the Final Follow-up Control Phase Inspection been performed for this DFOW?					
3.4	Has the Final Acceptance Inspection been performed for this DFOW?					
3.5	Have all asbuilts been recorded for this DFOW?					
3.6	WARRANTY: Has the warranty met the requirements specified in Section 01 61 03 EQUIPMENT AND MATERIALS?					

IF ANY OF THE ABOVE REQUIREMENTS WERE MARKED NO, EXPLAIN:

CONTRACTOR'S QC REPRESENTATIVE'S SIGNATURE	DATE	DISTRICT'S QA REPRESENTATIVE'S SIGNATURE	DATE

DFOW INSPECTION REPORT

PROJECT NAME: C-43 WEST BASIN STORAGE RESERVOIR
CONTRACT NUMBER: CN XXXXXXXXX
PACKAGE 4 - CIVIL WORKS

DEFINEABLE FEATURE OF WORK:	PRECAST CONCRETE PILING		
PRIME CONTRACTOR:		**DATE:**	
PRIME CONTRACTOR SUPERVISOR:			
QUALITY CONTROL SYSTEMS MANAGER:			
QC SPECIALIST:			
SUBCONTRACTOR:			
ACTIVITY:			
ACTIVITY LOCATION:			
ACTIVITY SPECIFICATIONS:			

1	PRE-CONSTRUCTION INSPECTIONS	NA	QC REP (INITIALS	DATE	QC REP (INITIALS	DATE
1.1	Have the DFOW specifications and drawings been reviewed with the understanding of specified requirements?					
1.2	Have the CQCP and AHA been reviewed with the comprehension and awareness of their Requirements?					
1.3	Have all pre-construction submittals and work plans been approved for this DFOW by the District?					
1.4	Have all RFIs been answered, reviewed and understood by the appropriate CQC Staff, Superintendant and required subcontractor?					
1.5	Has previous work been completed to enable this DFOW to begin without covering up non-compliance work?					
1.6	Has any and all preliminary work been completed in order to begin work for this DFOW?					
1.7	Have all as-builts been recorded from previous DFOW?					
1.8	Materials: Do all materials and equipment conform to the specification?					
1.9	Have all materials and equipment been handled and stored in accordance with the project specifications and the manufacturer's recommendations of requirements?					
1.10	QUALITY REQUIREMENTS- Piles: Has the contractor provided certification of a Professional Engineer registered in Florida, that layout and details of reinforcement and tendons conform with that shown on the structural design drawings?					
1.11	QUALITY REQUIREMENTS- Quality Requirement Procedures: Has the contractor submitted the precasting Manufacturer's quality requirement procedures and inspection records established in accordance with PCI MNL- 116?					

1.12	QUALITY REQUIREMENTS- Installation Procedures: Has the contractor submitted information on the type of equipment proposed to be used, proposed methods of operation, pile driving plan including proposed sequence of driving, and details of all pile driving equipment and accessories?						
1.13	QUALITY REQUIREMENTS-Geotechnical Consultant: Has the contractor retained the services of an independent, Registered Professional Geotechnical Engineer, experienced in soil mechanics and Pile Dynamic Analysis, to observe test pile installation and job pile installation as specified and is independent of the contractor and having no employee of employer relationship which could constitute a conflict of interest,?						
1.14	QUALITY REQUIREMENTS- Installation Procedures: Has the contractor provided details of pile driving equipment and a Wave Equation Analysis, completed by the contractor's Geotechnical Consultant, of pile drivability for selection of the hammer along with a statement of driving procedures in accordance with section 31 62 13.20, 1.4.3 Installation Procedures b?						
1.15	PRELIMINARY WORK- Wave Equation Analysis of Pile Drivability: Prior to driving any pile, has the contractor submitted a pile Wave Equation Analysis, performed by his Geotechnical Consultant, for each size pile and distinct subsurface profile condition in accordance with section 31 62 13.20, 3.2.1 Wave Equation Analysis of Pile Drivability?						
1.16	QUALITY REQUIREMENTS- Silica Fume Manufacturer's Representative: Has the contractor provide a statement that the Manufacturer's representative will be present at the plant to ensure proper mix, including high range water reducer (HRWR), and batching methods?						
1.17	PRELIMINARY WORK- Order List: Has the contractor submitted and the Construction Manager approved, an itemized list for piles prior to placing the order with the supplier as specified in section 31 62 13.20, 3.2.2 Order List?						
1.18	Has the contractor received all required written approvals by the District to begin work for this DFOW?						
1.19	Has the Preparatory Control Phase Inspection been performed and properly documented for this DFOW?						

IF ANY OF THE ABOVE REQUIREMENTS WERE MARKED NO, EXPLAIN:

2	CONSTRUCTION INSPECTIONS	NA	QC REP (INITIALS	DATE	QC REP (INITIALS	DATE
2.1	Has the Initial Control Phase Inspection been performed for this DFOW?					
2.2	Are the DQCRs and Daily Safety Reports current and complete with the correct information documenting this DFOW?					
2.3	PILE DRIVING EQUIPMENT- Has the contractor adhered to section 31 62 13.20, 3.1 PILE DRIVING EQUIPMENT?					
2.4	PRELIMINARY WORK- Pile Length Markings: Has the contractor marked each pile prior to driving with horizontal lines at one foot intervals, and the number of feet from pile tip at 5 foot intervals?					
2.5	PILE DRIVING- Driving Piles Notification: Has the contractor notified Construction Manager 10 days prior to driving of piles? (Piles may be driven when the specified 28-day concrete strength has been achieved but not less than 7 days after casting.)					
2.6	PILE DRIVING- Driving Piles: Has the contractor performed pile driving as specified in section 31 62 13.20, 3.3.1 Driving Piles?					
2.7	PILE DRIVING- Protection of Piles: Has the contractor taken care to avoid damage to piles during handling, placing pile in leads, and during pile driving operations in accordance with section 31 62 13.20, 3.3.2 Protection of Piles?					
2.8	PILE DRIVING- Tolerances in Driving: Has the contractor driven piles with a variation of not more than 2 percent from vertical for plumb piles or more than 4 percent from required angle for batter piles, maintaining and checking axial alignment of pile and leads at all times? (Twist in the pile shall be limited to no more than 1 percent.)					
2.9	PILE DRIVING- Tolerances in Driving: Has the contractor notified the Construction Manager if subsurface conditions cause pile drifting beyond allowable axial alignment tolerance? (perform corrective measures as directed)					
2.10	PILE DRIVING- Tolerances in Driving: Has the contractors place butts within 4 inches of location indicated? (Manipulation of piles within specified tolerances will not be permitted.)					
2.11	PILE DRIVING- Tolerances in Driving: Has the contractor maintained a location to provide a clear distance of at least 5" from butt to edge of pile cap? (If clear distance cannot be maintained, then notify Construction Manager.)					
2.12	PILE DRIVING- Tolerances in Driving: Has the contractor checked each pile for heave? (Redrive heaved piles to required point elevation.)					
2.13	PILE DRIVING- Rejected Piles: Have piles damaged or impaired for use during handling or driving, mislocated, or driven out of alignment beyond the maximum tolerance been withdrawn and replaced by new piles or been cut-off and abandoned and new piles driven as directed? (Excess cut-off from piles and unacceptable piles shall be removed from the work site.)					

2.14	PILE DRIVING- Jetting of Piles: Has the Jetting method and equipment been approved by the Construction Manager prior to commencing jetting operation and has Jetting conformed to section 31 62 13.20, 3.3.5 Jetting of Piles?						
2.15	PILE DRIVING- Splices: Are splices capable of developing the full strength of the member in compression, tension, shear, and bending? Has the contractor submitted and the District approved detail drawings of splices and design calculations demonstrating the strength of the splice?						
2.16	PILE DRIVING- Build-Ups: Where required, have pile sections been extended to cut-off elevation by means of a cast-in-place reinforced concrete build-up in accordance with PCI BDM and section 31 62 13.20, 3.3.7 Build-Ups?						
2.17	PILE DRIVING- Pile Cut-Off: Has the contractor cut-off piles with a smooth level cut using pneumatic tools, sawing, or other suitable methods approved by Construction Manager? (Use of explosives for cutting is not permitted. Cut-off sections of piles shall be removed from the site upon completion of the Work.)						
2.18	FIELD QUALITY CONTROL- Pile Records: Has the contractor kept and provided complete and accurate records of each pile driven in accordance with section 31 62 13.20, 3.4 FIELD QUALITY CONTROL 3.4.1 Pile Records?						

IF ANY OF THE ABOVE REQUIREMENTS WERE MARKED NO, EXPLAIN:

3	POST-CONSTRUCTION INSPECTIONS	NA	QC REP (INITIALS	DATE	QC REP (INITIALS	DATE
3.1	Has the Final Punch List been completed and provided to the District for this DFOW?					
3.2	Has the Pre-Final Punch List been completed and submitted for this DFOW?					
3.3	Has the Final Follow-up Control Phase Inspection been performed for this DFOW?					
3.4	Has the Final Acceptance Inspection been performed for this DFOW?					
3.5	Have all asbuilts been recorded for this DFOW?					
3.6	WARRANTY: Has the warranty met the requirements specified in Section 01 61 03 EQUIPMENT AND MATERIALS?					

IF ANY OF THE ABOVE REQUIREMENTS WERE MARKED NO, EXPLAIN:

CONTRACTOR'S QC REPRESENTATIVE'S SIGNATURE	DATE	DISTRICT'S QA REPRESENTATIVE'S SIGNATURE	DATE

DFOW INSPECTION REPORT

PROJECT NAME: C-43 WEST BASIN STORAGE RESERVOIR
CONTRACT NUMBER: CN XXXXXXXXX
PACKAGE 4 - CIVIL WORKS

DEFINEABLE FEATURE OF WORK:	**HVAC EQUIPMENT SYSTEM INSTALLATION**		
PRIME CONTRACTOR:		**DATE:**	
PRIME CONTRACTOR SUPERVISOR:			
QUALITY CONTROL SYSTEMS MANAGER:			
QC SPECIALIST:			
SUBCONTRACTOR:			
ACTIVITY:			
ACTIVITY LOCATION:			
ACTIVITY SPECIFICATIONS:	**23 09 13, 23 00 00, 23 05 48.00 40 & 23 05 93**		

1	PRE-CONSTRUCTION INSPECTIONS	NA	QC REP (INITIALS	DATE	QC REP (INITIALS	DATE
1.1	Have the DFOW specifications and drawings been reviewed with the understanding of specified requirements?					
1.2	Have the CQCP and AHA been reviewed with the comprehension and awareness of their Requirements?					
1.3	Have all pre-construction submittals and work plans been approved for this DFOW by the District?					
1.4	Have all RFIs been answered, reviewed and understood by the appropriate CQC Staff, Superintendant and required subcontractor?					
1.5	Has previous work been completed to enable this DFOW to begin without covering up non-compliance work?					
1.6	Has any and all preliminary work been completed in order to begin work for this DFOW?					
1.7	Have all as-builts been recorded from previous DFOW?					
1.8	Materials: Do all materials and equipment conform to the specification?					
1.9	Have all materials and equipment been handled and stored in accordance with the project specifications and the manufacturer's recommendations of requirements?					
1.10	Has the contractor received all required written approvals by the District to begin work for this DFOW?					
1.11	Has the Preparatory Control Phase Inspection been performed and properly documented for this DFOW?					

IF ANY OF THE ABOVE REQUIREMENTS WERE MARKED NO, EXPLAIN:

2	CONSTRUCTION INSPECTIONS		NA	QC REP (INITIALS	DATE	QC REP (INITIALS	DATE
2.1	Has the Initial Control Phase Inspection been performed for this DFOW?						
2.2	Are the DQCRs and Daily Safety Reports current and complete with the correct information documenting this DFOW?						
2.3	INSTALLATION- Has the contractor installed materials and equipment in accordance with the requirements of the contract drawings and approved Manufacturer's installation instructions and section 23 00 00, 3.2 INSTALLATION?						
2.4	EQUIPMENT PADS- Has the contractor provided equipment pads to the dimensions shown or, if not shown, to conform to the shape of each piece of equipment served with a minimum 3-inch margin around the equipment and supports?						
2.5	EQUIPMENT PADS- Has the contractor allowed equipment bases and foundations, when constructed of concrete or grout, to cure a minimum of 28 calendar days before being loaded?						
2.6	CUTTING AND PATCHING- Has the contractor adhered to section 23 00 00, 3.4 CUTTING AND PATCHING while performing cutting and patching?						
2.7	CLEANING- Has the contractor cleaned surfaces of piping and equipment and provides housekeeping practices as described in section 23 00 00, 3.5 CLEANING?						
2.8	PENETRATIONS- Has the contractor provided sleeves and prepared openings for duct mains, branches, and other penetrating items, and installed during the construction of the surface to be penetrated in accordance with section 23 00 00, 3.6 PENETRATIONS?						
2.9	FIELD PAINTING OF MECHANICAL EQUIPMENT- Has the contractor cleaned, pretreated, primed and painted metal surfaces in accordance with section 23 00 00.3.7 FIELD PAINTING OF MECHANICAL EQUIPMENT?						
2.10	IDENTIFICATION SYSTEMS- Has the contractor provided identification tags indicating service and item number on all valves and dampers as specified in section 23 00 00, 3.8 IDENTIFICATION SYSTEMS?						
2.11	DAMPER ACCEPTANCE TEST- Has the contractor submitted the proposed schedule, at least 2 weeks prior to the start of test and performed the tests in accordance with section 3.10 DAMPER ACCEPTANCE TEST?						
2.12	TESTING, ADJUSTING, AND BALANCING- Has the contractor performed TESTING, ADJUSTING AND BALANCING in accordance with the requirements for testing, adjusting, and balancing in Section 23 05 93 TESTING, ADJUSTING AND BALANCING FOR HVAC.? (Begin testing, adjusting, and balancing only when the air supply and distribution, including controls, has been completed, with the exception of performance tests.)						

2.13	PERFORMANCE TESTS- After testing, adjusting, and balancing is complete as specified, has the contractor tested each system as a whole to see that all items perform as integral parts of the system and temperatures and conditions are evenly controlled throughout the building, recorded the testing during the applicable season, made corrections and adjustments and conformed to section 3.12 PERFORMANCE TESTS?						
2.14	CLEANING AND ADJUSTING- Has the contractor performed the cleaning and adlustments of the system in accordance with section 23 00 00, 3.13 CLEANING AND ADJUSTING?						
2.15	VIBRATION AND SEISMIC CONTROLS FOR HVAC PIPING AND EQUIPMENT- Tests and Reports: Has the contractor ensured vibration-isolation devices are deflection tested after equipment start-up directed by a competent representative of the manufacturer, submitted test reports substantiating that all equipment has been isolated as specified and that minimum specified deflections have been met and that all measurements are made in the presence of the Construction Manager?						
2.16	TESTING, ADJUSTING, AND BALANCING FOR HVAC- Has the contractor calibrate and maintain instruments in accordance with Manufacturer's written procedures?						
2.17	DALT Testing- Has the contractor performed DALT on the HVAC duct sections of each system as selected by the COTR. In accordance with section 23 05 93, 3.2.4 DALT Testing?						
2.18	Completed Pre-Final DALT Report- After completion of the DALT work, has the Pre-final DALT Report been prepared, meeting the additional requirements specified in Appendix B REPORTS - DALT and TAB as described in section 23 05 93, 3.2.5 Completed Pre-Final DALT Report?						
2.19	Completed Pre-Final DALT Report- Has the TAB supervisor reviewed and certified the Pre-final DALT Report and submit this report within one day of completion of DALT field work and verbally notified the COTR that the field check of the Pre-final DALT Report data can commence?						
2.20	Quality Requirements - COTR DALT Field Acceptance Testing- Has the contractor, in the presence of the COTR and TAB team field leader, verified for accuracy Pre-final DALT Report data selected by the COTR as specified in section 23 05 93, 3.2.6 Quality Requirements - COTR DALT Field Acceptance Testing?						
2.21	Certified Final DALT Report- On successful completion of all field checks of the Pre-final DALT Report data for all systems, Has the TAB Supervisor assembled, reviewed, certified and submitted the Final DALT Report to the Construction Manager for approval?						
2.22	Prerequisite HVAC Work List- Has the contractor submitted advance notice of proportional balancing, Season 1, and Season 2 TAB field work accompanied by completed prerequisite HVAC Work List as specified in section 23 05 93, Appendix A WORK DESCRIPTIONS OF PARTICIPANTS, g. Give Notice of Testing?						
2.23	REPORTS - DALT and TAB- Has the contractor provided all DALT and TAB Reports in accordance with section 23 05 93, Appendix B REPORTS - DALT and TAB?						

IF ANY OF THE ABOVE REQUIREMENTS WERE MARKED NO, EXPLAIN:

3	POST-CONSTRUCTION INSPECTIONS	NA	QC REP (INITIALS	DATE	QC REP (INITIALS	DATE
3.1	Has the Final Punch List been completed and provided to the District for this DFOW?					
3.2	Has the Pre-Final Punch List been completed and submitted for this DFOW?					
3.3	Has the Final Follow-up Control Phase Inspection been performed for this DFOW?					
3.4	Has the Final Acceptance Inspection been performed for this DFOW?					
3.5	Have all asbuilts been recorded for this DFOW?					
3.6	Operation and Maintenance Manuals- Has the contractor submitted six manuals at least 2 weeks prior to field training in accordance with section 23 00 00, 3.14.1 Operation and Maintenance Manuals?					
3.7	Operation And Maintenance Training- Has the contractor conducted a training course for the members of the operating staff as designated by the Construction Manager in accordance with section 23 00 00, 3.14.2 Operation And Maintenance Training?					
3.8	WARRANTY: Has the warranty met the requirements specified in Section 01 61 03 EQUIPMENT AND MATERIALS?					

IF ANY OF THE ABOVE REQUIREMENTS WERE MARKED NO, EXPLAIN:

CONTRACTOR'S QC REPRESENTATIVE'S SIGNATURE	DATE	DISTRICT'S QA REPRESENTATIVE'S SIGNATURE	DATE

DFOW INSPECTION REPORT

PROJECT NAME: C-43 WEST BASIN STORAGE RESERVOIR
CONTRACT NUMBER: CN XXXXXXXXX
PACKAGE 4 - CIVIL WORKS

DEFINEABLE FEATURE OF WORK:	VERTICAL LIFT GATES		
PRIME CONTRACTOR:		**DATE:**	
PRIME CONTRACTOR SUPERVISOR:			
QUALITY CONTROL SYSTEMS MANAGER:			
QC SPECIALIST:			
SUBCONTRACTOR:			
ACTIVITY:			
ACTIVITY LOCATION:			
ACTIVITY SPECIFICATIONS:	35 20 16.53, 35 01 70.13, 05 50 14 & 40 05 57.23		

1	PRE-CONSTRUCTION INSPECTIONS	NA	QC REP (INITIALS	DATE	QC REP (INITIALS	DATE
1.1	Have the DFOW specifications and drawings been reviewed with the understanding of specified requirements?					
1.2	Have the CQCP and AHA been reviewed with the comprehension and awareness of their Requirements?					
1.3	Have all pre-construction submittals and work plans been approved for this DFOW by the District?					
1.4	Have all RFIs been answered, reviewed and understood by the appropriate CQC Staff, Superintendant and required subcontractor?					
1.5	Has previous work been completed to enable this DFOW to begin without covering up non-compliance work?					
1.6	Has any and all preliminary work been completed in order to begin work for this DFOW?					
1.7	Have all as-builts been recorded from previous DFOW?					
1.8	Materials: Do all materials and equipment conform to the specification?					
1.9	Have all materials and equipment been handled and stored in accordance with the project specifications and the manufacturer's recommendations of requirements?					
1.10	Has the contractor received all required written approvals by the District to begin work for this DFOW?					
1.11	Prior to welding, has the contractor submitted certification for each welder stating the type of welding and positions qualified for, the code and procedure qualified under, date qualified, and the firm and individual certifying the qualification tests while conform to all requirements specified in AWS D1.1/D1.1M.					
1.12	Has the Preparatory Control Phase Inspection been performed and properly documented for this DFOW?					

IF ANY OF THE ABOVE REQUIREMENTS WERE MARKED NO, EXPLAIN:

2	CONSTRUCTION INSPECTIONS		NA	QC REP (INITIALS	DATE	QC REP (INITIALS	DATE
2.1	Has the Initial Control Phase Inspection been performed for this DFOW?						
2.2	Are the DQCRs and Daily Safety Reports current and complete with the correct information documenting this DFOW?						
2.3	TESTS, INSPECTIONS, AND VERIFICATIONS- Stress-Relief Heat Treatment: Where stress relief heat treatment is specified or shown, has the contractor performed stress relief heat treatment in accordance with the requirements of AWS D1.1/D1.1M, Subclause 5.8?						
2.4	TESTS, INSPECTIONS, AND VERIFICATIONS- Ultrasonic Testing: Has the contractor made, evaluated and reported ultrasonic testing of welds in conformance to the requirements of AWS D1.1/D1.1M, Clause 6, Part C, provided ultrasonic equipment capable of making a permanent record of the test indications and made a record of each weld tested?						
2.5	TESTS, INSPECTIONS, AND VERIFICATIONS- Dye Penetrant Inspection: Has the contractor performed dye penetrant inspections of welds conforming to the applicable provisions of ASTM E165/E165M?						
2.6	TESTS, INSPECTIONS, AND VERIFICATIONS- Magnetic Particle Inspection: Has the contractor performed magnetic particle inspections of welds to the applicable provisions of ASTM E709?						
2.7	TESTS, INSPECTIONS, AND VERIFICATIONS- Inspection of Steel Castings: Has the contractor performed radiographic inspections of steel castings at the casting plant as designated and as described in section 05 50 14, 2.2.6 Inspection of Steel Castings covering the particular item of work?						
2.8	Inspection- Have all shop assembled components been inspected for accurate fit and compliance with dimensional tolerances by the contractor in accordance with section 35 20 16.53, 2.4.1 Inspection?						
2.9	Execution- Installation: Has the contractor ensured all installation is in accordance with section 05 50 14, 3.1 and section 35 20 16.53, 3.1 INSTALLATION?						
2.10	TESTS- Has the contractor ensured all tests have been performed in accordance with section 05 50 14, 3.2 TESTS?						
2.11	Operation Tests- Has the operation of the shop-assembled gate assembly been tested by opening and closing the gate several times by use of the operating machinery and in accordance with section 35 20 16.52?						
2.12	Rubber Seals- Are all rubber seals compounded of natural rubber, synthetic polyisoprene, or a blend of both, and contain reinforcing carbon black, zinc oxide, accelerators, antioxidants, vulcanizing agents, and plasticizers and do the physical characteristics of the seals meet the requirements specified in the table of section 35 20 16.53, 2.1.2.1 Physical Characteristics?						

2.13	Wire Rope- Pre-Stretching: Has the contractor submitted the Pre-Stretching Procedure? Has the contractor pre- tretched the wire ropes before attaching their end terminations and in accordance with section 35 01 70.13, 2.1.3 Pre-Stretching?						
2.14	Wire Rope- Wire Strength and Ductility: Has the contractor performed testing in accordance with FS RR-W-410 to verify wire strength and ductility? Has the contractor submitted the test results to the District?						
2.15	Wire Rope- Pre-forming: Has the contractor provided pre-formed wire rope, and performed testing in accordance with FS RRW- 410 to verify pre-forming? Has the contractor submitted the test results to the District?						
2.16	Wire Rope- Stress Relief "(Wrapping Test)": Has the contractor stress relieved the wire rope, and performed testing in accordance with FS RRW- 410 to verify stress relief? Has the contractor submitted the test results to the District?						
2.17	Wire Rope- Tension Testing: Has the contractor performed a tension test to verify the wire rope meets the accepted industry standards for nominal strength? Has the contractor submitted rope tension test report to the District?						
2.18	Wire Rope- Has up to two representatives of the District been present to witness the various manufacturing processes for the wire rope?						
2.19	Wire Rope- ATTACHING SOCKETS: Has the contractor attached the end terminations to the wire rope recommended by WRTB?						
2.20	Wire Rope- CLEAN DRUMS AND SHEAVES: Has the contractor cleaned all drums and sheaved all grooves as specified in section 35 01 70.13, 3.3 CLEAN DRUMS AND SHEAVES?						
2.21	Wire Rope- LUBRICATION: Has the contractor lubricated the wire ropes after they installation, but before breakin/ testing?						
2.22	Wire Rope- Has the contractor performed un-reeling and installing of the wire rope as indicated and in accordance with section 35 01 70.13, 3.5 UN-REELING AND INSTALLING WIRE ROPE?						
2.23	Wire Rope- FIELD TENSIONING MULTI-LINE HOISTS: Has the contractor adjusted the wire rope tension of multi-line hoists to ensure that they share load equally in accordance with section 35 01 70.13, 3.6 FIELD TENSIONING MULTI-LINE HOISTS?						
2.24	Wire Rope- BREAK-IN/TESTING: After installation is complete, has the contractor run the gate-operating device through four complete cycles, fully open to fully closed?						
2.25	ELECTRIC ACTUATORS- QUALITY REQUIREMENTS: Are manufacturers experienced in the design and manufacture of actuators and accessories for a minimum period of ten (10) years?						
2.26	ELECTRIC ACTUATORS- INSTALLATION: Has the installation Complied with provisions of AWWA C560, C540 and as specified?						
2.27	ELECTRIC ACTUATORS- Has the contractor performed equipment tests during and after start-up to determine if equipment is performing as specified?						

2.28	ELECTRIC ACTUATORS- Has the contractor lubricated all bearings and gears before placing gates in operation?						
2.29	ACCEPTANCE TRIAL OPERATION AND TEST- After the gate assembly has been installed, including operating machinery, has the District examined the complete system for final acceptance?						
2.30	PROTECTION OF FINISHED WORK- Has the contractor ensured all finished work has been protected in accordance with section 05 50 14, 3.3 PROTECTION OF FINISHED WORK?						

IF ANY OF THE ABOVE REQUIREMENTS WERE MARKED NO, EXPLAIN:

3	POST-CONSTRUCTION INSPECTIONS	NA	QC REP (INITIALS	DATE	QC REP (INITIALS	DATE
3.1	Has the Final Punch List been completed and provided to the District for this DFOW?					
3.2	Has the Pre-Final Punch List been completed and submitted for this DFOW?					
3.3	Has the Final Follow-up Control Phase Inspection been performed for this DFOW?					
3.4	Has the Final Acceptance Inspection been performed for this DFOW?					
3.5	Have all asbuilts been recorded for this DFOW?					
3.6	Has the cotractor provide Manufacturer's field services as specified?					
3.7	WARRANTY: Has the warranty met the requirements specified in Section 01 61 03 EQUIPMENT AND MATERIALS?					

IF ANY OF THE ABOVE REQUIREMENTS WERE MARKED NO, EXPLAIN:

CONTRACTOR'S QC REPRESENTATIVE'S SIGNATURE	DATE	DISTRICT'S QA REPRESENTATIVE'S SIGNATURE	DATE

DFOW INSPECTION REPORT

PROJECT NAME: C-43 WEST BASIN STORAGE RESERVOIR
CONTRACT NUMBER: CN XXXXXXXXX
PACKAGE 4 - CIVIL WORKS

DEFINEABLE FEATURE OF WORK:	DISCHARGE PIPING		
PRIME CONTRACTOR:		**DATE:**	
PRIME CONTRACTOR SUPERVISOR:			
QUALITY CONTROL SYSTEMS MANAGER:			
QC SPECIALIST:			
SUBCONTRACTOR:			
ACTIVITY:			
ACTIVITY LOCATION:			
ACTIVITY SPECIFICATIONS:	40 05 22, 40 17 30.00 40 & 09 06 90		

1	PRE-CONSTRUCTION INSPECTIONS	NA	QC REP (INITIALS	DATE	QC REP (INITIALS	DATE
1.1	Have the DFOW specifications and drawings been reviewed with the understanding of specified requirements?					
1.2	Have the CQCP and AHA been reviewed with the comprehension and awareness of their Requirements?					
1.3	Have all pre-construction submittals and work plans been approved for this DFOW by the District?					
1.4	Have all RFIs been answered, reviewed and understood by the appropriate CQC Staff, Superintendant and required subcontractor?					
1.5	Has previous work been completed to enable this DFOW to begin without covering up non-compliance work?					
1.6	Has any and all preliminary work been completed in order to begin work for this DFOW?					
1.7	Have all as-builts been recorded from previous DFOW?					
1.8	Materials: Do all materials and equipment conform to the specification?					
1.9	Have all materials and equipment been handled and stored in accordance with the project specifications and the manufacturer's recommendations of requirements?					
1.10	Has the contractor received all required written approvals by the District to begin work for this DFOW?					
1.11	Has the Preparatory Control Phase Inspection been performed and properly documented for this DFOW?					

IF ANY OF THE ABOVE REQUIREMENTS WERE MARKED NO, EXPLAIN:

2	CONSTRUCTION INSPECTIONS	NA	QC REP (INITIALS	DATE	QC REP (INITIALS	DATE
2.1	Has the Initial Control Phase Inspection been performed for this DFOW?					
2.2	Are the DQCRs and Daily Safety Reports current and complete with the correct information documenting this DFOW?					
2.3	INSTALLATION OF PIPE MATERIALS- Trenching and Backfilling: Has the contractor performed trenching and backfilling as specified in Section 31 00 00 EARTHWORK?					
2.4	INSTALLATION OF PIPE MATERIALS- Pipe Installation: Has the contractor joined pipe larger than 24" in the trench?					
2.5	INSTALLATION OF PIPE MATERIALS- Pipe Installation: For pipe less than 24" that has been joined prior to placement in the trench, has the contractor provided proper care during placement to ensure the soundness of the joined sections?					
2.6	INSTALLATION OF PIPE MATERIALS- Pipe Installation: Have all pipe joints been lap welded slip joints unless indicated otherwise?					
2.7	INSTALLATION OF PIPE MATERIALS- Pipe Installation: Have all flanged joints where specified been made with gaskets and bolting materials and made according to the Manufacturer's recommendations and the requirements of AWWA M11? Have all bolts been tightened using procedures and recommended torque rates described in AWWA C604?					
2.8	INSTALLATION OF PIPE MATERIALS- Couplings: Have all couplings been installed to Manufacturer's recommendations?					
2.9	FIELD QUALITY CONTROL- Nondestructive Testing (NDT): Has the contractor performed fabrication and erection inspections prior to assembly, during assembly, during welding and after welding to ensure that materials and workmanship meet the requirements of the contract documents?					
2.10	FIELD QUALITY CONTROL- Nondestructive Testing (NDT): Has the contractor submitted radiographs to the District, verifying each specified radiograph, as a minimum, has the Agency Weld No. (including repair cycle no.), the Agency Drawing No., the Agency View No and the Agency Contract No. information permanently included in the image?					
2.11	FIELD QUALITY CONTROL- Nondestructive Testing (NDT): Prior to the District's inspection, has the contractor removed all slag and scale from all welds using procedures which do not produce notches in either the weld metal or adjacent base metal?					

2.12	FIELD QUALITY CONTROL- Nondestructive Testing (NDT): Has the District performed final interpretation and granted acceptance of all radiographs of welded joints, with the exception of code stamped pressure vessel welds?						
2.13	FIELD QUALITY CONTROL- Nondestructive Testing (NDT): Has the contractor immediately repaired unacceptable welds and made ready for District reinspection?						
2.14	FIELD QUALITY CONTROL- Nondestructive Testing (NDT): Has the District granted Final acceptance of all welded, brazed joints?						
2.15	FIELD QUALITY CONTROL- Nondestructive Testing (NDT): After weld joints have been satisfactorily completed and accepted by the District, has the contractor cleaned the joint area to a bright, unpitted, and unscarred surface and protected in accordance with the contract documents?						
2.16	FIELD QUALITY CONTROL- Nondestructive Testing (NDT): Pressure Vessels - Has the contractor performed all nondestructive testing in accordance with the requirements of ASME BPVC SEC V, ensuring acceptance requirements are in accordance with ASME BPVC SEC V?						
2.17	FIELD QUALITY CONTROL- Nondestructive Testing (NDT) Piping - Has the contractor Performed NDT of all piping systems, except plumbing systems, in accordance with the requirements of ASME BPVC SEC V and in accordance with section 40 17 30.00 40, 3.2.1.3 Piping?						
2.18	FIELD QUALITY CONTROL- PROTECTION OF ADJACENT MATERIALS: Has the contractor protected machinery, materials, floor, furnishings, finishes and other items adjacent to the welding, brazing operations to prevent any damage from these operations?						
2.25	Protective Coating- Field Painting: Has the contractor touch-uped any and all coatings damaged during shipment or installation with the touch-up paint furnished by the manufacturer? (Coordinate painting with pump and flap valve manufacturers to insure consistency and adhere to see DFOW Protective Coatings Checklist.)						

IF ANY OF THE ABOVE REQUIREMENTS WERE MARKED NO, EXPLAIN:

3	POST-CONSTRUCTION INSPECTIONS	NA	QC REP (INITIALS	DATE	QC REP (INITIALS	DATE
3.1	Has the Final Punch List been completed and provided to the District for this DFOW?					
3.2	Has the Pre-Final Punch List been completed and submitted for this DFOW?					
3.3	Has the Final Follow-up Control Phase Inspection been performed for this DFOW?					
3.4	Has the Final Acceptance Inspection been performed for this DFOW?					
3.5	Have all asbuilts been recorded for this DFOW?					
3.6	WARRANTY: Has the warranty met the requirements specified in Section 01 61 03 EQUIPMENT AND MATERIALS?					

IF ANY OF THE ABOVE REQUIREMENTS WERE MARKED NO, EXPLAIN:

CONTRACTOR'S QC REPRESENTATIVE'S SIGNATURE	DATE	DISTRICT'S QA REPRESENTATIVE'S SIGNATURE	DATE

DFOW INSPECTION REPORT

PROJECT NAME: C-43 WEST BASIN STORAGE RESERVOIR
CONTRACT NUMBER: CN XXXXXXXXX
PACKAGE 4 - CIVIL WORKS

DEFINEABLE FEATURE OF WORK:	**LPG FUEL TANK MONITORING**		
PRIME CONTRACTOR:		**DATE:**	
PRIME CONTRACTOR SUPERVISOR:			
QUALITY CONTROL SYSTEMS MANAGER:			
QC SPECIALIST:			
SUBCONTRACTOR:			
ACTIVITY:			
ACTIVITY LOCATION:			
ACTIVITY SPECIFICATIONS:	**23 14 00**		

1	PRE-CONSTRUCTION INSPECTIONS	NA	QC REP (INITIALS	DATE	QC REP (INITIALS	DATE
1.1	Have the DFOW specifications and drawings been reviewed with the understanding of specified requirements?					
1.2	Have the CQCP and AHA been reviewed with the comprehension and awareness of their Requirements?					
1.3	Have all pre-construction submittals and work plans been approved for this DFOW by the District?					
1.4	Have all RFIs been answered, reviewed and understood by the appropriate CQC Staff, Superintendant and required subcontractor?					
1.5	Has previous work been completed to enable this DFOW to begin without covering up non-compliance work?					
1.6	Has any and all preliminary work been completed in order to begin work for this DFOW?					
1.7	Have all as-builts been recorded from previous DFOW?					
1.8	Materials: Do all materials and equipment conform to the specification?					
1.9	Have all materials and equipment been handled and stored in accordance with the project specifications and the manufacturer's recommendations of requirements?					
1.10	Has the contractor received all required written approvals by the District to begin work for this DFOW?					
1.11	Has the Preparatory Control Phase Inspection been performed and properly documented for this DFOW?					

IF ANY OF THE ABOVE REQUIREMENTS WERE MARKED NO, EXPLAIN:

2	CONSTRUCTION INSPECTIONS	NA	QC REP (INITIALS	DATE	QC REP (INITIALS	DATE
2.1	Has the Initial Control Phase Inspection been performed for this DFOW?					
2.2	Are the DQCRs and Daily Safety Reports current and complete with the correct information documenting this DFOW?					
2.3	Has the contractor, first, examined the substrates and conditions under which the monitoring system is to be installed and notified the District, in writing, of conditions detrimental to the proper and timely completion of the Work?					
2.4	INSTALLATION- Has the contractor installed equipment completely with necessary hardware in accordance with the Drawings, Manufacturer's instructions and as specified in section 23 14 00, 3.2?					
2.5	Has a Performance Test been performed of the complete system after installation to insure proper performance?					
2.6	Have all final adjustments necessary to all parts of the equipment furnished under this Contract been made during the Performance Test?					
2.7	Have all tests specified been conducted by a representative of the Manufacturer and witnessed by the District?					

IF ANY OF THE ABOVE REQUIREMENTS WERE MARKED NO, EXPLAIN:

3	POST-CONSTRUCTION INSPECTIONS	NA	QC REP (INITIALS	DATE	QC REP (INITIALS	DATE
3.1	Has the Final Punch List been completed and provided to the District for this DFOW?					
3.2	Has the Pre-Final Punch List been completed and submitted for this DFOW?					
3.3	Has the Final Follow-up Control Phase Inspection been performed for this DFOW?					
3.4	Has the Final Acceptance Inspection been performed for this DFOW?					
3.5	Have all asbuilts been recorded for this DFOW?					
3.6	WARRANTY: Has the warranty met the requirements specified in Section 01 61 03 EQUIPMENT AND MATERIALS?					

IF ANY OF THE ABOVE REQUIREMENTS WERE MARKED NO, EXPLAIN:

CONTRACTOR'S QC REPRESENTATIVE'S SIGNATURE	DATE	DISTRICT'S QA REPRESENTATIVE'S SIGNATURE	DATE

DFOW INSPECTION REPORT

PROJECT NAME: C-43 WEST BASIN STORAGE RESERVOIR
CONTRACT NUMBER: CN XXXXXXXXX
PACKAGE 4 - CIVIL WORKS

DEFINEABLE FEATURE OF WORK:	INSULATED WIRE AND CABLE		
PRIME CONTRACTOR:		**DATE:**	
PRIME CONTRACTOR SUPERVISOR:			
QUALITY CONTROL SYSTEMS MANAGER:			
QC SPECIALIST:			
SUBCONTRACTOR:			
ACTIVITY:			
ACTIVITY LOCATION:			
ACTIVITY SPECIFICATIONS:	26 05 19.10 10		

1	PRE-CONSTRUCTION INSPECTIONS	NA	QC REP (INITIALS	DATE	QC REP (INITIALS	DATE
1.1	Have the DFOW specifications and drawings been reviewed with the understanding of specified requirements?					
1.2	Have the CQCP and AHA been reviewed with the comprehension and awareness of their Requirements?					
1.3	Have all pre-construction submittals and work plans been approved for this DFOW by the District?					
1.4	Have all RFIs been answered, reviewed and understood by the appropriate CQC Staff, Superintendant and required subcontractor?					
1.5	Has previous work been completed to enable this DFOW to begin without covering up non-compliance work?					
1.6	Has any and all preliminary work been completed in order to begin work for this DFOW?					
1.7	Have all as-builts been recorded from previous DFOW?					
1.8	Materials: Do all materials and equipment conform to the specification?					
1.9	Have all materials and equipment been handled and stored in accordance with the project specifications and the manufacturer's recommendations of requirements?					
1.10	Has the contractor submitted Cable Manufacturing Data with the information described in 3.1 INSTALLATION INSTRUCTIONS of section 26 05 19.10 10?					
1.11	Reports: Has the contractor furnished results of tests? (No wire or cable must be shipped until authorized. Lot number and reel or coil number of wire and cable tested must be indicated on the test reports.)					
1.12	Has the contractor received all required written approvals by the District to begin work for this DFOW?					

1.13	Has the Preparatory Control Phase Inspection been performed and properly documented for this DFOW?						

IF ANY OF THE ABOVE REQUIREMENTS WERE MARKED NO, EXPLAIN:

2	CONSTRUCTION INSPECTIONS		NA	QC REP (INITIALS	DATE	QC REP (INITIALS	DATE
2.1	Has the Initial Control Phase Inspection been performed for this DFOW?						
2.2	Are the DQCRs and Daily Safety Reports current and complete with the correct information documenting this DFOW?						
2.3	Cable Data: Do not begin any wire and cable fabrication until materials are submitted and approved by the District. Have cable data submittals been approved by the District including, but not limited to, dimensioned sketches showing cable construction and sufficient additional data to show that wire and cable meet the requirements of this Section?						
2.4	Inspection and Tests: Inspection and tests of wire and cable furnished under specification 26 05 19.10 10 must be made by and at the plant of the manufacturer, and the manufacturer must provide certification and certification reports of completed inspections and completed tests. Have the certifications and certification reports been provided?						
2.5	Inspection and Tests: The District may require or perform further tests before or after installation. Testing in general must comply with NEMA WC 57, NEMA WC 70, ANSI/NEMA WC 71/ICEA S-96-659, or NEMA WC 74/ICEA S-93-639 as applicable. Specific tests required for particular materials, components, and completed cables must be as specified in the sections of the above standards applicable to those materials, components, and cable types. Tests must also be performed in accordance with the additional requirements specified below. Submit 6 certified copies of test reports.						
2.6	Flame Tests: Have flame test been performed and recorded for reporting in accordance with 3.2.2.2 FLAME TEST of section 26 05 19.10 10? (In this case the reports furnished under paragraph "Reports," must include information, identify critical information, and verify that all of each cable's materials, construction, and dimensions are the same as those in the qualifying tests.)						

IF ANY OF THE ABOVE REQUIREMENTS WERE MARKED NO, EXPLAIN:

3	POST-CONSTRUCTION INSPECTIONS	NA	QC REP (INITIALS	DATE	QC REP (INITIALS	DATE
3.1	Has the Final Punch List been completed and provided to the District for this DFOW?					
3.2	Has the Pre-Final Punch List been completed and submitted for this DFOW?					
3.3	Has the Final Follow-up Control Phase Inspection been performed for this DFOW?					
3.4	Has the Final Acceptance Inspection been performed for this DFOW?					
3.5	Have all asbuilts been recorded for this DFOW?					
3.6	WARRANTY: Has the warranty met the requirements specified in Section 01 61 03 EQUIPMENT AND MATERIALS?					

IF ANY OF THE ABOVE REQUIREMENTS WERE MARKED NO, EXPLAIN:

CONTRACTOR'S QC REPRESENTATIVE'S SIGNATURE	DATE	DISTRICT'S QA REPRESENTATIVE'S SIGNATURE	DATE

DFOW INSPECTION REPORT

PROJECT NAME: C-43 WEST BASIN STORAGE RESERVOIR
CONTRACT NUMBER: CN XXXXXXXXX
PACKAGE 4 - CIVIL WORKS

DEFINEABLE FEATURE OF WORK:	LOW VOLTAGE OVERCURRENT DEVICE		
PRIME CONTRACTOR:		**DATE:**	
PRIME CONTRACTOR SUPERVISOR:			
QUALITY CONTROL SYSTEMS MANAGER:			
QC SPECIALIST:			
SUBCONTRACTOR:			
ACTIVITY:			
ACTIVITY LOCATION:			
ACTIVITY SPECIFICATIONS:	26 05 71.00 40		

1	PRE-CONSTRUCTION INSPECTIONS	NA	QC REP (INITIALS	DATE	QC REP (INITIALS	DATE
1.1	Have the DFOW specifications and drawings been reviewed with the understanding of specified requirements?					
1.2	Have the CQCP and AHA been reviewed with the comprehension and awareness of their Requirements?					
1.3	Have all pre-construction submittals and work plans been approved for this DFOW by the District?					
1.4	Have all RFIs been answered, reviewed and understood by the appropriate CQC Staff, Superintendant and required subcontractor?					
1.5	Has previous work been completed to enable this DFOW to begin without covering up non-compliance work?					
1.6	Has any and all preliminary work been completed in order to begin work for this DFOW?					
1.7	Have all as-builts been recorded from previous DFOW?					
1.8	Materials: Do all materials and equipment conform to the specification?					
1.9	Have all materials and equipment been handled and stored in accordance with the project specifications and the manufacturer's recommendations of requirements?					
1.10	Has the contractor received all required written approvals by the District to begin work for this DFOW?					
1.11	Has the Preparatory Control Phase Inspection been performed and properly documented for this DFOW?					

IF ANY OF THE ABOVE REQUIREMENTS WERE MARKED NO, EXPLAIN:

2	CONSTRUCTION INSPECTIONS	NA	QC REP (INITIALS	DATE	QC REP (INITIALS	DATE
2.1	Has the Initial Control Phase Inspection been performed for this DFOW?					
2.2	Are the DQCRs and Daily Safety Reports current and complete with the correct information documenting this DFOW?					
2.3	Has the contractor protected all metallic materials against corrosion?					
2.4	Has the contractor installed all Control devices and protective devices that are not factory installed in equipment, in accordance with the manufacturer's recommendations?					
2.5	Has the contractor conformed to NFPA 70, NEMA ICS 1 and NEMA ICS 2 requirements for installation of control and protective devices?					
2.6	Has the contractor Field adjusted and operations tested the control and protective devices?					
2.7	FIELD TESTING- Has the contractor demonstrated the operation and controls of protective devices of non-factory installed equipment?					
2.8	FIELD TESTING- Has the contractor verified tap settings of all instrumentation, potential, and current transformers?					
2.9	FIELD TESTING- Has the contractor field adjusted reduced-oltage starting devices to obtain optimum operating conditions, providing test meters and instrument transformers that conform to ANSI C12.1 and IEEE C57.13?					
2.10	FIELD TESTING- Before energizing of control and protective devices, have the recorded test databeen approved by the Construction Manager?					
2.11	FIELD TESTING- Have the final test reports neen provided to the Construction Manager for approval in accordance with section 26 05 71.00 40, 3.2?					

IF ANY OF THE ABOVE REQUIREMENTS WERE MARKED NO, EXPLAIN:

3	POST-CONSTRUCTION INSPECTIONS	NA	QC REP (INITIALS	DATE	QC REP (INITIALS	DATE
3.1	Has the Final Punch List been completed and provided to the District for this DFOW?					
3.2	Has the Pre-Final Punch List been completed and submitted for this DFOW?					
3.3	Has the Final Follow-up Control Phase Inspection been performed for this DFOW?					
3.4	Has the Final Acceptance Inspection been performed for this DFOW?					
3.5	Have all asbuilts been recorded for this DFOW?					
3.6	WARRANTY: Has the warranty met the requirements specified in Section 01 61 03 EQUIPMENT AND MATERIALS?					

IF ANY OF THE ABOVE REQUIREMENTS WERE MARKED NO, EXPLAIN:

CONTRACTOR'S QC REPRESENTATIVE'S SIGNATURE	DATE	DISTRICT'S QA REPRESENTATIVE'S SIGNATURE	DATE

DFOW INSPECTION REPORT

PROJECT NAME: C-43 WEST BASIN STORAGE RESERVOIR
CONTRACT NUMBER: CN XXXXXXXXX
PACKAGE 4 - CIVIL WORKS

DEFINEABLE FEATURE OF WORK:	**DISTRIBUTION SYSTEM**		
PRIME CONTRACTOR:		**DATE:**	
PRIME CONTRACTOR SUPERVISOR:			
QUALITY CONTROL SYSTEMS MANAGER:			
QC SPECIALIST:			
SUBCONTRACTOR:			
ACTIVITY:			
ACTIVITY LOCATION:			
ACTIVITY SPECIFICATIONS:	**26 20 00**		

1	PRE-CONSTRUCTION INSPECTIONS	NA	QC REP (INITIALS	DATE	QC REP (INITIALS	DATE
1.1	Have the DFOW specifications and drawings been reviewed with the understanding of specified requirements?					
1.2	Have the CQCP and AHA been reviewed with the comprehension and awareness of their Requirements?					
1.3	Have all pre-construction submittals and work plans been approved for this DFOW by the District?					
1.4	Have all RFIs been answered, reviewed and understood by the appropriate CQC Staff, Superintendant and required subcontractor?					
1.5	Has previous work been completed to enable this DFOW to begin without covering up non-compliance work?					
1.6	Has any and all preliminary work been completed in order to begin work for this DFOW?					
1.7	Have all as-builts been recorded from previous DFOW?					
1.8	Materials: Do all materials and equipment conform to the specification?					
1.9	Have all materials and equipment been handled and stored in accordance with the project specifications and the manufacturer's recommendations of requirements?					
1.10	Has the contractor received all required written approvals by the District to begin work for this DFOW?					
1.11	Has the Preparatory Control Phase Inspection been performed and properly documented for this DFOW?					

IF ANY OF THE ABOVE REQUIREMENTS WERE MARKED NO, EXPLAIN:

2	CONSTRUCTION INSPECTIONS	NA	QC REP (INITIALS	DATE	QC REP (INITIALS	DATE
2.1	Has the Initial Control Phase Inspection been performed for this DFOW?					
2.2	Are the DQCRs and Daily Safety Reports current and complete with the correct information documenting this DFOW?					
2.3	INSTALLATION- Has the electrical installations, including weatherproof and hazardous locations and ducts, plenums and other air-handling spaces conformed to requirements of NFPA 70 and IEEE C2 and to requirements of section 26 20 00, 3.1 INSTALLATION and the contract drawings?					
2.4	FIELD FABRICATED NAMEPLATE MOUNTING- Has the contractor provided number, location, and letter designation of nameplates as indicated and fastened nameplates to the device as specified in section 26 20 00, 3.2 Field Fabricated Nameplate Mounting?					
2.5	WARNING SIGN MOUNTING- Has the contractor provided the number of signs required to be readable from each accessible side, with the signs spaced in accordance with NFPA 70E?					
2.6	FIELD APPLIED PAINTING- Has the contractor painted electrical equipment as required in section 09 06 90 PAINTS AND COATINGS to match finish of adjacent surfaces or to meet the indicated or specified safety criteria, as well as adhering to section 26 20 00, 3.4 FIELD APPLIED PAINTING?					
2.7	POSTED OPERATING INSTRUCTIONS- Has the contractor printed or engraved operating instructions and frame under glass or in approved laminated plastic, post instructions where directed and as specified in section 26 20 00, 3.5 POSTED OPERATING INSTRUCTIONS?					
2.8	FIELD QUALITY CONTROL- Has the contractor given the Construction Manager 5 working days notice prior to each test, performed each test and submitted test reports in accordance with referenced standards in section 26 20 00, 3.6 FIELD QUALITY CONTROL?					

IF ANY OF THE ABOVE REQUIREMENTS WERE MARKED NO, EXPLAIN:

3	POST-CONSTRUCTION INSPECTIONS	NA	QC REP (INITIALS	DATE	QC REP (INITIALS	DATE
3.1	Has the Final Punch List been completed and provided to the District for this DFOW?					
3.2	Has the Pre-Final Punch List been completed and submitted for this DFOW?					
3.3	Has the Final Follow-up Control Phase Inspection been performed for this DFOW?					
3.4	Has the Final Acceptance Inspection been performed for this DFOW?					
3.5	Have all asbuilts been recorded for this DFOW?					
3.6	WARRANTY: Has the warranty met the requirements specified in Section 01 61 03 EQUIPMENT AND MATERIALS?					

IF ANY OF THE ABOVE REQUIREMENTS WERE MARKED NO, EXPLAIN:

CONTRACTOR'S QC REPRESENTATIVE'S SIGNATURE	DATE	DISTRICT'S QA REPRESENTATIVE'S SIGNATURE	DATE

DFOW INSPECTION REPORT

PROJECT NAME: C-43 WEST BASIN STORAGE RESERVOIR
CONTRACT NUMBER: CN XXXXXXXXX
PACKAGE 4 - CIVIL WORKS

DEFINEABLE FEATURE OF WORK:	**ARC FLASH STUDY**		
PRIME CONTRACTOR:		**DATE:**	
PRIME CONTRACTOR SUPERVISOR:			
QUALITY CONTROL SYSTEMS MANAGER:			
QC SPECIALIST:			
SUBCONTRACTOR:			
ACTIVITY:			
ACTIVITY LOCATION:			
ACTIVITY SPECIFICATIONS:	**26 28 01.00 10**		

1	PRE-CONSTRUCTION INSPECTIONS	NA	QC REP (INITIALS	DATE	QC REP (INITIALS	DATE
1.1	Have the DFOW specifications and drawings been reviewed with the understanding of specified requirements?					
1.2	Have the CQCP and AHA been reviewed with the comprehension and awareness of their Requirements?					
1.3	Have all pre-construction submittals and work plans been approved for this DFOW by the District?					
1.4	Have all RFIs been answered, reviewed and understood by the appropriate CQC Staff, Superintendant and required subcontractor?					
1.5	Has previous work been completed to enable this DFOW to begin without covering up non-compliance work?					
1.6	Has any and all preliminary work been completed in order to begin work for this DFOW?					
1.7	Have all as-builts been recorded from previous DFOW?					
1.8	Materials: Do all materials and equipment conform to the specification?					
1.9	Have all materials and equipment been handled and stored in accordance with the project specifications and the manufacturer's recommendations of requirements?					
1.10	Has the contractor received all required written approvals by the District to begin work for this DFOW?					

1.11	System Coordinator: Has the contractor employed a registered professional electrical power engineer with a minimum of 3 years of current experience in the coordination of electrical power systems to accomplish the system coordination, recommended ratings and settings of protective devices, and design analysis? (Submit verification of experience and license number, of a registered Professional Engineer as specified above. Experience data shall include at least five references for work of a magnitude comparable to this contract, including points of contact, addresses and telephone numbers.)?					
1.12	Has the Preparatory Control Phase Inspection been performed and properly documented for this DFOW?					

IF ANY OF THE ABOVE REQUIREMENTS WERE MARKED NO, EXPLAIN:

2	CONSTRUCTION INSPECTIONS	NA	QC REP (INITIALS	DATE	QC REP (INITIALS	DATE
2.1	Has the Initial Control Phase Inspection been performed for this DFOW?					
2.2	Are the DQCRs and Daily Safety Reports current and complete with the correct information documenting this DFOW?					
2.3	EXAMINATION: Has the contractor, after becoming familiar with details of the work, verified dimensions in the field, and					
2.4	Arc Flash Analysis: Has the contractor performed incident energy calculations in accordance with IEEE 1584- 002Guide for Performing Arc Flash Hazard Calculations for all equipment analyzed in the short circuit study? (Tabular results and recommended labels from the software program are acceptable.)					
2.5	Arc Flash Analysis: Is data from short circuit and device coordination study being used?					
2.6	Arc Flash Analysis: Is manufacturer data being used for: enclosure type; gap between exposed conductors or bussway; grounding type; number of phases and connection; and working distance?					
2.7	Arc Flash Study Report: Does the report include a narrative describing: the analyses performed; the bases and methods used; and the desired method of coordinated protection of the power system?					
2.8	Arc Flash Study Report: Does the study include descriptive and technical data for existing devices and new protective devices proposed, along with manufacturers published data, nameplate data, and definition of the fixed or adjustable features of the existing or new protective devices?					

IF ANY OF THE ABOVE REQUIREMENTS WERE MARKED NO, EXPLAIN:

3	POST-CONSTRUCTION INSPECTIONS	NA	QC REP (INITIALS	DATE	QC REP (INITIALS	DATE
3.1	Has the Final Punch List been completed and provided to the District for this DFOW?					
3.2	Has the Pre-Final Punch List been completed and submitted for this DFOW?					
3.3	Has the Final Follow-up Control Phase Inspection been performed for this DFOW?					
3.4	Has the Final Acceptance Inspection been performed for this DFOW?					
3.5	Have all asbuilts been recorded for this DFOW?					

IF ANY OF THE ABOVE REQUIREMENTS WERE MARKED NO, EXPLAIN:

CONTRACTOR'S QC REPRESENTATIVE'S SIGNATURE	DATE	DISTRICT'S QA REPRESENTATIVE'S SIGNATURE	DATE

DFOW INSPECTION REPORT

PROJECT NAME: C-43 WEST BASIN STORAGE RESERVOIR
CONTRACT NUMBER: CN XXXXXXXXX
PACKAGE 4 - CIVIL WORKS

DEFINEABLE FEATURE OF WORK:	AUTOMATIC TRANSFER SWITCH		
PRIME CONTRACTOR:		**DATE:**	
PRIME CONTRACTOR SUPERVISOR:			
QUALITY CONTROL SYSTEMS MANAGER:			
QC SPECIALIST:			
SUBCONTRACTOR:			
ACTIVITY:			
ACTIVITY LOCATION:	Choose one of the following locations. S-471 S-473 S-475 S-481A D-477 S-479		
ACTIVITY SPECIFICATIONS:	26 28 21.00 40		

1	PRE-CONSTRUCTION INSPECTIONS	NA	QC REP (INITIALS	DATE	QC REP (INITIALS	DATE
1.1	Have the DFOW specifications and drawings been reviewed with the understanding of specified requirements?					
1.2	Have the CQCP and AHA been reviewed with the comprehension and awareness of their Requirements?					
1.3	Have all pre-construction submittals and work plans been approved for this DFOW by the District?					
1.4	Have all RFIs been answered, reviewed and understood by the appropriate CQC Staff, Superintendant and required subcontractor?					
1.5	Has previous work been completed to enable this DFOW to begin without covering up non-compliance work?					
1.6	Has any and all preliminary work been completed in order to begin work for this DFOW?					
1.7	Have all as-builts been recorded from previous DFOW?					
1.8	Materials: Do all materials and equipment conform to the specification?					
1.9	Have all materials and equipment been handled and stored in accordance with the project specifications and the manufacturer's recommendations of requirements?					
1.10	Has the contractor received all required written approvals by the District to begin work for this DFOW?					
1.11	Has the Preparatory Control Phase Inspection been performed and properly documented for this DFOW?					

IF ANY OF THE ABOVE REQUIREMENTS WERE MARKED NO, EXPLAIN:

2	CONSTRUCTION INSPECTIONS	NA	QC REP (INITIALS	DATE	QC REP (INITIALS	DATE
2.1	Has the Initial Control Phase Inspection been performed for this DFOW?					
2.2	Are the DQCRs and Daily Safety Reports current and complete with the correct information documenting this DFOW?					
2.3	Installation: Has the contractor installed automatic transfer switch as indicated, and in accordance with the manufacturer's installation instructions?					
2.4	Installation: Has the contractor fully aligned and installed wallmounted enclosures at the indicated mounting height using a minimum of six 3/8-inch bolts? (Use of sheet metal screws or small machine screws is not permitted.)					
2.5	Installation: Has the contractor submitted listing of product installations for automatic transfer switches showing the manufacturer has successfully manufactured automatic transfer switches of the size specified for a minimum period of 10 years, including on the list, purchaser, address of installation, service organization, and date of installation?					
2.6	Field Quality Control: Has the contractor demonstrated the automatic transfer switch operates in accordance with the specification requirements in conjunction with the normal and emergency power sources?					

IF ANY OF THE ABOVE REQUIREMENTS WERE MARKED NO, EXPLAIN:

3	POST-CONSTRUCTION INSPECTIONS	NA	QC REP (INITIALS	DATE	QC REP (INITIALS	DATE
3.1	Has the Final Punch List been completed and provided to the District for this DFOW?					
3.2	Has the Pre-Final Punch List been completed and submitted for this DFOW?					
3.3	Has the Final Follow-up Control Phase Inspection been performed for this DFOW?					
3.4	Has the Final Acceptance Inspection been performed for this DFOW?					
3.5	Have all asbuilts been recorded for this DFOW?					
3.6	WARRANTY: Has the warranty met the requirements specified in Section 01 61 03 EQUIPMENT AND MATERIALS?					

IF ANY OF THE ABOVE REQUIREMENTS WERE MARKED NO, EXPLAIN:

CONTRACTOR'S QC REPRESENTATIVE'S SIGNATURE	DATE	DISTRICT'S QA REPRESENTATIVE'S SIGNATURE	DATE

DFOW INSPECTION REPORT

PROJECT NAME: C-43 WEST BASIN STORAGE RESERVOIR
CONTRACT NUMBER: CN XXXXXXXXX
PACKAGE 4 - CIVIL WORKS

DEFINEABLE FEATURE OF WORK:	STANBY GENERATOR AND LPG SYSTEM INSTALLATION		
PRIME CONTRACTOR:		**DATE:**	
PRIME CONTRACTOR SUPERVISOR:			
QUALITY CONTROL SYSTEMS MANAGER:			
QC SPECIALIST:			
SUBCONTRACTOR:			
ACTIVITY:			
ACTIVITY LOCATION:			
ACTIVITY SPECIFICATIONS:	26 32 15 & 26 36 14		

1	PRE-CONSTRUCTION INSPECTIONS	NA	QC REP (INITIALS	DATE	QC REP (INITIALS	DATE
1.1	Have the DFOW specifications and drawings been reviewed with the understanding of specified requirements?					
1.2	Have the CQCP and AHA been reviewed with the comprehension and awareness of their Requirements?					
1.3	Have all pre-construction submittals and work plans been approved for this DFOW by the District?					
1.4	Have all RFIs been answered, reviewed and understood by the appropriate CQC Staff, Superintendant and required subcontractor?					
1.5	Has previous work been completed to enable this DFOW to begin without covering up non-compliance work?					
1.6	Has any and all preliminary work been completed in order to begin work for this DFOW?					
1.7	Have all as-builts been recorded from previous DFOW?					
1.8	Materials: Do all materials and equipment conform to the specification?					
1.9	Have all materials and equipment been handled and stored in accordance with the project specifications and the manufacturer's recommendations of requirements?					
1.10	Has the contractor received all required written approvals by the District to begin work for this DFOW?					
1.11	Has the Preparatory Control Phase Inspection been performed and properly documented for this DFOW?					

IF ANY OF THE ABOVE REQUIREMENTS WERE MARKED NO, EXPLAIN:

2	CONSTRUCTION INSPECTIONS	NA	QC REP (INITIALS	DATE	QC REP (INITIALS	DATE
2.1	Has the Initial Control Phase Inspection been performed for this DFOW?					
2.2	Are the DQCRs and Daily Safety Reports current and complete with the correct information documenting this DFOW?					
2.3	SITE PREPARATION -Excavation, Backfill, and Compaction: Is the area needed for the installation of the concrete pad cleared and stripped of all topsoil and unsuitable material?					
2.4	SITE PREPARATION -Excavation, Backfill, and Compaction: Is the Site excavated or filled to the depth as necessary to achieve the final elevation of the concrete pad?					
2.5	SITE PREPARATION -Excavation, Backfill, and Compaction: Is all earthen and subgrade fill required Select Fill in accordance with Section 03 11 13.00 STRUCTURAL CAST-IN-LACE CONCRETE?					
2.6	Concrete Pad: Has the tank been placed on a concrete pad constructed to the dimensions shown on the Drawings for the size of the tank to be installed?					
2.7	Concrete Pad: Has the concrete pad been built on a minimum thickness of six (6) inches with Florida Department of Transportation (FDOT) #57 stone, unless otherwise noted on the Drawings?					
2.8	Concrete Pad: Does the concrete for the slab meet specification Section 03 11 13.00 STRUCTURAL CAST-IN-PLACE CONCRETE?					
2.9	Concrete Pad: Has the concrete been allowed 28 days to cure before placement of the tank(s)?					
2.10	INSTALLATION: Are all underground piping for LP fuel lines installed a minimum of 18 inches below grade, except where greater bury depth is required as indicated in the Drawing? Are the pipe trenchs free of rock and graded so that the pipe has a firm continuous bearing on the bottom of the trench?					
2.11	INSTALLATION: Are continuous lengths of underground warning tapes installed 12- inches above and parallel to all underground fuel line? Is tape 6-inches wide polyethylene with foil backing film imprinted "CAUTION - BURIED GAS LINE BELOW"?					
2.12	INSTALLATION: Are secondary fuel pressure regulators installed on exterior of building?					
2.13	INSTALLATION: Are NEMA 4x Automatic Safety Shutoff Valve (ASSV) installed on exterior gas train downstream (low pressure side) of secondary pressure regulators?					
2.14	INSTALLATION: Has the system been installed in accordance with NFPA 58, NFPA 54 and Manufacturer's recommendations?					
2.15	INSTALLATION: Have all valves, fittings, equipment, etc., been installed, inspected, tested, and put into successful operation?					
2.16	INSTALLATION: For additional installation requirements refer to Section 40 05 13 PIPELINES, LIQUID PROCESS PIPING.					

2.17	PRESSURE AND LEAKAGE TESTS: Prior to acceptance all components of the LPG fuel system shall be inspected, and pressure tested, to determine that the system is acceptable for operation as required by the FDACS and all other applicable local, state, and federal agencies. Has the pressure and leakage test been performed in accordance with the procedures of 3.4 PRESSURE AND LEAK TESTS of section 26 32 15?					
2.18	FIELD QUALITY CONTROL: Has the contractor tested equipment and installation to verify tightness, operation, and unit heat pump vibration is within manufacturer's submitted maximum?					
2.19	FIELD QUALITY CONTROL: Has the contractor tested equipment performance and balance equipment as specified in Section 23 05 93 TESTING, ADJUSTING, AND BALANCING FOR HVAC?					

IF ANY OF THE ABOVE REQUIREMENTS WERE MARKED NO, EXPLAIN:

3	POST-CONSTRUCTION INSPECTIONS	NA	QC REP (INITIALS	DATE	QC REP (INITIALS	DATE
3.1	Has the Final Punch List been completed and provided to the District for this DFOW?					
3.2	Has the Pre-Final Punch List been completed and submitted for this DFOW?					
3.3	Has the Final Follow-up Control Phase Inspection been performed for this DFOW?					
3.4	Has the Final Acceptance Inspection been performed for this DFOW?					
3.5	Have all asbuilts been recorded for this DFOW?					
3.6	WARRANTY: Has the warranty met the requirements specified in Section 01 61 03 EQUIPMENT AND MATERIALS?					

IF ANY OF THE ABOVE REQUIREMENTS WERE MARKED NO, EXPLAIN:

CONTRACTOR'S QC REPRESENTATIVE'S SIGNATURE	DATE	DISTRICT'S QA REPRESENTATIVE'S SIGNATURE	DATE

DFOW INSPECTION REPORT

PROJECT NAME: C-43 WEST BASIN STORAGE RESERVOIR
CONTRACT NUMBER: CN XXXXXXXXX
PACKAGE 4 - CIVIL WORKS

DEFINEABLE FEATURE OF WORK:	LIGHTNING PROTECTION		
PRIME CONTRACTOR:		**DATE:**	
PRIME CONTRACTOR SUPERVISOR:			
QUALITY CONTROL SYSTEMS MANAGER:			
QC SPECIALIST:			
SUBCONTRACTOR:			
ACTIVITY:			
ACTIVITY LOCATION:			
ACTIVITY SPECIFICATIONS:	26 41 00		

1	PRE-CONSTRUCTION INSPECTIONS	NA	QC REP (INITIALS	DATE	QC REP (INITIALS	DATE
1.1	Have the DFOW specifications and drawings been reviewed with the understanding of specified requirements?					
1.2	Have the CQCP and AHA been reviewed with the comprehension and awareness of their Requirements?					
1.3	Have all pre-construction submittals and work plans been approved for this DFOW by the District?					
1.4	Have all RFIs been answered, reviewed and understood by the appropriate CQC Staff, Superintendant and required subcontractor?					
1.5	Has previous work been completed to enable this DFOW to begin without covering up non-compliance work?					
1.6	Has any and all preliminary work been completed in order to begin work for this DFOW?					
1.7	Have all as-builts been recorded from previous DFOW?					
1.8	Materials: Do all materials and equipment conform to the specification?					
1.9	Have all materials and equipment been handled and stored in accordance with the project specifications and the manufacturer's recommendations of requirements?					
1.10	Has the contractor received all required written approvals by the District to begin work for this DFOW?					
1.11	Has the contractor employed and provided certification from a commercial third-party inspection company whose sole work is lightning protection, stating that the lightning protection system complies with NFPA 780? (Third party inspection company cannot be the system installer or the system designer.)					

1.12	SITE CONDITIONS: Has the contractor confirmed all details of work, verified all dimensions in field, and advised the District of any discrepancy before performing work? (Obtain prior approval of the District before changing the design.)						
1.13	Has the Preparatory Control Phase Inspection been performed and properly documented for this DFOW?						

IF ANY OF THE ABOVE REQUIREMENTS WERE MARKED NO, EXPLAIN:

2	CONSTRUCTION INSPECTIONS	NA	QC REP (INITIALS	DATE	QC REP (INITIALS	DATE
2.1	Has the Initial Control Phase Inspection been performed for this DFOW?					
2.2	Are the DQCRs and Daily Safety Reports current and complete with the correct information documenting this DFOW?					
2.3	EXECUTION -INTEGRAL SYSTEM: Has the contractor provided a lightning protection system that meets the requirements of NFPA 780, including tie-ins to existing lightning protection systems? (Lightning protection system consists of air terminals, roof conductors, down conductors, ground connections, and grounding electrodes and ground ring electrode conductor.)					
2.4	EXECUTION -INTEGRAL SYSTEM: Are conductors exposed on the structures except where conductors are required to be in protective sleeves?					
2.5	EXECUTION -INTEGRAL SYSTEM: Are secondary conductors bonded with grounded metallic parts within the building?					
2.6	EXECUTION -INTEGRAL SYSTEM: Are interconnections within side-flash distances made at or below the level of the grounded metallic parts?					
2.7	EXECUTION -Roof-Mounted Components: Has the contractor coordinated with the roofing Manufacturer and provided certification that the roof Manufacturer's warranty is not violated by the installation methods for air terminals and roof conductors?					
2.8	EXECUTION -Air Terminals: Has the contractor used adhesive shoes with adhesive approved by the roof Manufacturer when installing air terminals on "rubber" (EPDM) type roofs?					
2.9	EXECUTION -Air Terminals: In areas of snow or constant wind, has the contractor ensured that a section of roofing material (minimum dimensional area of 1 square foot) is first glued to the roof and then the air terminal is glued to it unless the roof Manufacturer recommends another solution?					
2.10	EXECUTION -Air Terminals: Has a standing seam base been used for installation of air terminals on a standing seam metal roof that does not produce any roof penetrations?					
2.11	EXECUTION -Roof Conductors: Has the contractor used adhesive shoes with adhesive approved by the roof Manufacturer when installing roof conductors on "rubber" (EPDM) type roofs?					

2.12	EXECUTION -Roof Conductors: Has the contractor used a standing seam base for installation of roof conductors on a standing seam metal roof that does not produce any roof penetrations?						
2.13	EXECUTION -Roof Conductors: Are roof conductors concealed within the ceiling cavities as much as practicable?						
2.14	EXECUTION -Down Conductors: Has the contractor protected exposed down conductors from physical damage as required by NFPA 780? (Use Schedule 80 PVC to protect down conductors. Paint the Schedule 80 PVC to match the surrounding surface with paint that is approved for use on PVC.)						
2.15	EXECUTION -Ground Connections: Has each down conductor and ground ring electrode been attached to ground rods by welding (including exothermic), brazing, or compression?						
2.16	EXECUTION -Ground Connections: Are all connections to ground rods below ground level by exothermic weld connection or with a high compression connection using a hydraulic or electric compression tool to provide the correct circumferential pressure? (Accessible connections above ground level and in test wells can be accomplished by mechanical clamping.)						
2.17	EXECUTION -Grounding Electrodes: Has the contractor extended driven ground rods vertically into the existing undisturbed earth for a distance of not less 10 feet?						
2.18	EXECUTION -Grounding Electrodes: Are ground rods not less than 3 feet nor more than 8 feet, from the structure foundation, and at least beyond the drip line for the facility?						
2.19	EXECUTION -Grounding Electrodes: After the completed installation, has the contractor measured the total resistance to ground using the fall-of-potential method described in IEEE 81? (Maximum allowed resistance of a driven ground rod is 25 ohms, under normally dry conditions when a ground ring electrode is not used.)						
2.20	EXECUTION -Grounding Electrodes: Has the contractor contacted the District for direction on how to proceed when two of any three ground rods, driven not less than 10 feet into the ground, a minimum of 10 feet apart, and equally spaced around the perimeter, give a combined value exceeding 50 ohms immediately after having driven?						
2.21	EXECUTION -Grounding Electrodes - Ground Ring Electrodes: For ground ring electrode, has the contractor provided continuous No. 1/0 bare stranded copper cable?						
2.22	EXECUTION -Grounding Electrodes - Ground Ring Electrodes: Has the contractor layed ground ring electrodes around the perimeter of the structure in a trench not less than 3 feet nor more than 8 feet from the nearest point of the structure foundation, and at least beyond the drip line of the facility?						

2.23	EXECUTION -Grounding Electrodes - Ground Ring Electrodes: Have the ground ring electrodes been installed to a minimum depth of 30 inches? Has the contractor installed a ground ring electrode in earth undisturbed by excavation, not earth fill, and do not locate beneath roof overhang, or wholly under paved areas or roadways where rainfall cannot penetrate to keep soil moist in the vicinity of the cable?					
2.24	EXECUTION -Grounding Plates: Have grounding plates been provided for each down conductor?					
2.25	EXECUTION -Grounding Plates: Have grounding plates been set not less than 3 feet nor more than 8 feet, from the structure foundation, and at least beyond the drip line for the facility?					
2.26	EXECUTION -Grounding Plates: Are grounding plates buried as deeply in the existing dirt as local conditions allow, without exceeding 10 feet in depth?					
2.27	APPLICATIONS -Nonmetallic Exterior Walls with Metallic Roof: Are metal roof sections bonded together which are insulated from each other so that they are electrically continuous, having a surface contact of at least 3 square inches?					
2.28	INTERFACE WITH OTHER STRUCTURES -Fences: Are metal fence and gate systems bonded to the lightning protection system whenever the fence or gate is within 6 feet of any part of the lightning protection system in accordance with ANSI C2?					
2.29	INTERFACE WITH OTHER STRUCTURES -Exterior Overhead Systems: Are exterior overhead systems bonded to the nearest down conductor as close to grade as possible? {This includes overhead pipes, conduits, cable trays, or any other metallic objects on the exterior of the building that enter a building. In addition, bond pipes, conduits, and cable trays to any metallic objects (such as steel structural support of air handling units or cooling towers) that are within 6 feet.}					
2.30	RESTORATION: Where sod has been removed, has the contractor placed sod as soon as possible after completing the backfilling? Has the contractor restored, to original condition, the areas disturbed by trenching, storing of dirt, cable laying, and other work? (Overfill to accommodate for settling. Include necessary topsoil, fertilizing, liming, seeding, sodding, sprigging or mulching in any restoration.)					
2.31	RESTORATION: Has disturbed surfaces been maintained and replacements until final acceptance?					
2.32	FIELD QUALITY CONTROL -Lightning Protection and Grounding System Test: Has the contractor tested the lightning protection and grounding system to ensure continuity is not in excess of 1 ohm and that resistance to ground is not in excess of 25 ohms? (Provide documentation for the measured values at each test point.)					
2.33	FIELD QUALITY CONTROL -Lightning Protection and Grounding System Test: Has the contractor tested the ground rod for resistance to ground before making connections to the rod? (Tie the grounding system together and test for resistance to ground. Make resistance measurements in dry weather, not earlier than 48 hours after rainfall.)					

2.34	FIELD QUALITY CONTROL -Lightning Protection and Grounding System Test: Has the contractor included in the written report: locations of test points, measured values for continuity and ground resistances, and soil conditions at the time that measurements were made? (Submit results of each test to the District.)					

IF ANY OF THE ABOVE REQUIREMENTS WERE MARKED NO, EXPLAIN:

3	POST-CONSTRUCTION INSPECTIONS	NA	QC REP (INITIALS	DATE	QC REP (INITIALS	DATE
3.1	Has the Final Punch List been completed and provided to the District for this DFOW?					
3.2	Has the Pre-Final Punch List been completed and submitted for this DFOW?					
3.3	Has the Final Follow-up Control Phase Inspection been performed for this DFOW?					
3.4	Has the Final Acceptance Inspection been performed for this DFOW?					
3.5	Have all asbuilts been recorded for this DFOW?					
3.6	WARRANTY: Has the warranty met the requirements specified in Section 01 61 03 EQUIPMENT AND MATERIALS?					

IF ANY OF THE ABOVE REQUIREMENTS WERE MARKED NO, EXPLAIN:

CONTRACTOR'S QC REPRESENTATIVE'S SIGNATURE	DATE	DISTRICT'S QA REPRESENTATIVE'S SIGNATURE	DATE

DFOW INSPECTION REPORT

PROJECT NAME: C-43 WEST BASIN STORAGE RESERVOIR
CONTRACT NUMBER: CN XXXXXXXXX
PACKAGE 4 - CIVIL WORKS

DEFINEABLE FEATURE OF WORK:	CATHODIC PROTECTION SYSTEM (SACRIFICIAL ANODE)		
PRIME CONTRACTOR:		**DATE:**	
PRIME CONTRACTOR SUPERVISOR:			
QUALITY CONTROL SYSTEMS MANAGER:			
QC SPECIALIST:			
SUBCONTRACTOR:			
ACTIVITY:			
ACTIVITY LOCATION:			
ACTIVITY SPECIFICATIONS:	26 42 14.00 10		

1	PRE-CONSTRUCTION INSPECTIONS	NA	QC REP (INITIALS	DATE	QC REP (INITIALS	DATE
1.1	Have the DFOW Specifications been Reviewed with the Understanding of Specified Requirements?					
1.2	Have the CQCP and AHA been reviewed with the comprehension and awareness of their Requirements?					
1.3	Have all pre-construction submittals and work plans been approved for this DFOW by the District?					
1.4	Have all RFIs been answered, reviewed and understood by the appropriate CQC Staff, Superintendant and required					
1.5	Has previous work been completed to enable this DFOW to begin without covering up non-compliance work?					
1.6	Has any and all preliminary work been completed in order to begin work for this DFOW?					
1.7	Have all as-builts been recorded from previous DFOW?					
1.8	Materials: Do all materials and equipment conform to the specification?					
1.9	Have all materials and equipment been handled and stored in accordance with the project specifications and the manufacturer's recommendations of requirements?					
1.10	Has the contractor received all required written approvals by the District to begin work for this DFOW?					
1.11	Has the Preparatory Control Phase Inspection been performed and properly documented for this DFOW?					
1.12	Services of a Corrosion Expert- Has the contractor obtained the services of a "corrosion expert" to supervise, inspect, and test the installation and performance of the cathodic protection system?					

IF ANY OF THE ABOVE REQUIREMENTS WERE MARKED NO, EXPLAIN:

2	CONSTRUCTION INSPECTIONS	NA	QC REP (INITIALS	DATE	QC REP (INITIALS	DATE
2.1	Has the Initial Control Phase Inspection been performed for this DFOW?					
2.2	Are the DQCRs and Daily Safety Reports current and complete with the correct information documenting this DFOW?					
2.3	Have all Deficiencies/Non-conformances been Corrected and Documented related to this DFOW?					
2.4	DELIVERY, STORAGE, AND HANDLING Has the District designated the designated area for magnesium anodes to be stored? (If anodes are not stored in a building, tarps or similar protection should be used to protect anodes from inclement weather. Packaged anodes, damaged as a result of improper handling or being exposed to rain, shall be resacked and the required backfill added.)					
2.5	CRITERIA OF PROTECTION: Is the acceptance criteria for determining the adequacy of protection on a buried underground pipe or tank in accordance with NACE SP0169 and as specified?					
2.6	EXECUTION -Iron and Steel: Has the contractor used the specified A method for testing cathodic protection in accordance with 3.1.1 of section 26 42 14.00 10? (If more than one method is required, method B. shall be used.)					
2.7	EXECUTION -Aluminum: Has the contractor performed cathodic protection testing for aluminum in accordance with 3.1.2 ALUMINUM of section 26 42 14.00 10?					
2.8	EXECUTION -Copper Piping: Has the contractor performed cathodic protection testing for copper piping in accordance with 3.1.3 COPPER PIPING of section 26 42 14.00 10?					
2.9	TRENCHING AND BACKFILLING: Has the contractor performed trenching and backfilling in accordance with section 31 00 00 EARTHWORK and conforming to 3.2 of section 26 42 14.00 10? (In the event rock is encountered in providing the required depth for anodes, determine an alternate approved location and, if the depth is still not provided, submit an alternate plan to the District. Alternate techniques and depths must be approved prior to implementation.)					
2.10	INSTALLATION -Anodes: Has the contractor performed anode installations in accordance with 3.3.1 of section 26 42 14.00 10, including single anodes and groups of anodes? (Unless otherwise authorized, installation shall not proceed without the presence of the District. Locations may be changed to clear obstructions with the approval of the Construction Manager.)					

2.11	INSTALLATION -Welding Methods: Are the welding methods used by the contractor for connections to ferrous pipe or metal tanks made by exothermic weld methods manufactured for the type of pipe or tank supplied? (Electric arc welded connections and other types of welded connections to ferrous pipe and structures shall be approved by the District before use.)						
2.12	Anode Placement - General: Has the contractor placed anodes in accordance with the procedures lined out in 3.3.2 of section 26 42 14.00 10?						
2.13	Underground Pipeline: Are anodes installed at a minimum of 8 feet and a maximum of 10 feet from the line to be protected?						
2.14	Lead Wire Connections -Underground Pipeline (Metallic): Are all anode lead wires connected to a test station and buried a minimum of 24 inch in depth and conform to 3.3.5.1 UNDERGROUND PIPELINE (METALLIC) of section 26 42 14.00 10?.						
2.15	Lead Wire Connections -Resistance Wire Splices: Are resistance wire connections accomplished with silver solder and the solder joints wrapped with a minimum of three (3) layers of pressuresensitive tape? Are lead wire connections installed in a moistureproof splice mold kit and filled with epoxy resin?						
2.16	Location of Test Stations: Do the locations of the test stations adhere to 3.3.6 of section 26 42 14.00 10?						
2.17	Underground Pipe Joint Bonds: Have underground pipe having other than welded or threaded coupling joints been made electrically continuous by means of a bonding connection installed across the joint.						
2.18	ELECTRICAL ISOLATION OF STRUCTURES -Isolation Joints and Fittings: Has the contractor installed isolating fittings, including main line isolating flanges and couplings, aboveground, or within manholes, wherever possible? (Where isolating joints must be covered with soil, they shall be fitted with a paper joint cover specifically manufactured for covering the particular joint, and the space within the cover filled with hot coal-tar enamel.)						
2.19	ELECTRICAL ISOLATION OF STRUCTURES -Isolation Joints and Fittings: Are isolating fittings in lines entering buildings located at least 12 inch above grade of floor level, when possible? Are isolating joints provided with grounding cells to protect against over-voltage surges or approved surge protection devices? (The cells shall provide a low resistance across isolating joint without excessive loss of cathodic current.)						
2.20	ELECTRICAL ISOLATION OF STRUCTURES -Gas Distribution Piping: Are Electrical isolations provided at each building riser pipe to the pressure regulator, at all points where a short to another structure or to a foreign structure may occur, and at other locations as indicated on the drawings?						
2.21	TESTS AND MEASUREMENTS - Has he contractor submitted test reports in booklet form tabulating all field tests and measurements performed, upon completion and testing of the installed system and including close interval potential survey, casing and interference tests, final system test verifying protection, insulated joint and bond tests, and holiday coating test?						

2.22	TESTS AND MEASUREMENTS - Has the contractor submitted a certified test report showing that the connecting method has passed a 120-day laboratory test without failure at the place of connection, wherein the anode is subjected to maximum recommended current output while immersed in a three percent sodium chloride solution?						
2.23	TESTS AND MEASUREMENTS -Baseline Potentials: Has the District witnessed each test and measurement? Has the District been notified a minimum of five (5) working days prior to each test? (After backfill of the pipe or tank, the static potential-to-soil of the pipe or tank shall be measured. The locations of these measurements shall be identical to the locations specified for pipe or tank to-reference electrode potential measurements. The initial measurements shall be recorded.)						
2.24	TESTS AND MEASUREMENTS -Isolation Testing: Has the isolation testing been performed in accordance with 3.5.2 of section 26 42 14.00 10?						
2.25	TESTS AND MEASUREMENTS -Insulation Checker: Has a Model 601 insulation checker, as manufactured by "Gas Electronics", or an approved equal, using the continuity check circuit, been used for isolating joint (flange) electrical testing? (Testing shall conform to the manufacturer's operating instructions and as specified in 3.5.2.1 of section 26 42 14.00 10. Test shall be witnessed by the District.)						
2.26	TESTS AND MEASUREMENTS -Cathodic Protection Meter: Has a Model B3A2 cathodic protection meter, as manufactured by "M.C. Miller", or an approved equal, using the continuity check circuit, been used for isolating joint (flange) electrical testing?						
2.27	TESTS AND MEASUREMENTS -Anode Output: As the anodes or groups of anodes are connected to the pipe or tank, are the current output measured with an approved clamp-on milliammeter, calibrated shunt with a suitable millivoltmeter or multimeter, or a low resistance ammeter? (The values obtained and the date, time, and location shall be recorded.)						
2.28	TESTS AND MEASUREMENTS -Reference Electrode Potential Measurements: Upon completion of the installation and with the entire cathodic protection system in operation, have electrode potential measurements been made and recorded as specified in 3.5.4 of section 26 42 14.00 10?						
2.29	TESTS AND MEASUREMENTS -Location of Measurements - Piping or Conduit: Has the contractor performed measurements of piping and conduit at locations specified in 3.5.5.1 of section 26 42 14.00 10? (Locations where potentials do not meet or exceed the criteria shall be identified and reported to the District's representative.)						
2.30	TESTS AND MEASUREMENTS -Location of Measurements - Tanks: For underground tanks, has the contractor taken at least 6 measurements from the reference electrode located: a. Directly over the center of the tank? b. At a point directly over the tank and midway between each pair of anodes?						

2.31	TESTS AND MEASUREMENTS -Location of Measurements - Casing Tests: Has the contractor tested the electrical separation of carrier pipe from casings and any short circuits corrected, before final acceptance of the installation?						
2.32	TESTS AND MEASUREMENTS -Location of Measurements - Interference Testing: Before final acceptance of the installation, has the contractor performed interference tests with respect to any foreign pipes or tanks in cooperation with the owner of the foreign pipes or tanks?						
2.33	TESTS AND MEASUREMENTS -Location of Measurements - Holiday Testing: Has the contractor performed Holiday testing in accordance with 3.5.5.5 of section 26 42 14.00 10?						
2.34	TESTS AND MEASUREMENTS -Recording Measurements: Has the contractor recorded all tank to-soil measurements as specified in 3.5.5.6 of section 26 42 14.00 10?						
2.35	TRAINING COURSE: Has the contractor conducted a training course for the operating staff as designated by the District and in accordance with 3.6 TRAINING COURSE of Section 26 42 14.00 10?						
2.36	SYSTEM TESTING: Has the contractor submitted a report including potential measurements taken at adequately-close intervals to establish that minus 850 millivolts potential, "instant-off" potential, is provided, and that the cathodic protection is not providing interference to other foreign pipes causing damage to paint or pipes? (The report shall provide a narrative describing how the criteria of protection is achieved without damaging other pipe or structures in the area.)						
2.37	SEEDING: Has seeding been completed as directed and as specified? (The use of sod in lieu of seeding shall require approval by the District.)						
2.38	CLEANUP: Has the contractor performed cleanup of the construction site as specified?						

IF ANY OF THE ABOVE REQUIREMENTS WERE MARKED NO, EXPLAIN:

3	POST-CONSTRUCTION INSPECTIONS	NA	QC REP (INITIALS	DATE	QC REP (INITIALS	DATE
3.1	Has the Final Punch List been completed and provided to the District for this DFOW?					
3.2	Has the Pre-Final Punch List been completed and submitted for this DFOW?					
3.3	Has the Final Follow-up Control Phase Inspection been performed for this DFOW?					
3.4	Has the Final Acceptance Inspection been performed for this DFOW?					
3.5	Have all asbuilts been recorded for this DFOW?					
3.6	WARRANTY: Has the warranty met the requirements specified in Section 01 61 03 EQUIPMENT AND MATERIALS?					

IF ANY OF THE ABOVE REQUIREMENTS WERE MARKED NO, EXPLAIN:

CONTRACTOR'S QC REPRESENTATIVE'S SIGNATURE	DATE	DISTRICT'S QA REPRESENTATIVE'S SIGNATURE	DATE

DFOW INSPECTION REPORT

PROJECT NAME: C-43 WEST BASIN STORAGE RESERVOIR
CONTRACT NUMBER: CN XXXXXXXXX
PACKAGE 4 - CIVIL WORKS

DEFINEABLE FEATURE OF WORK:	INTERIOR LIGHTING		
PRIME CONTRACTOR:		**DATE:**	
PRIME CONTRACTOR SUPERVISOR:			
QUALITY CONTROL SYSTEMS MANAGER:			
QC SPECIALIST:			
SUBCONTRACTOR:			
ACTIVITY:			
ACTIVITY LOCATION:			
ACTIVITY SPECIFICATIONS:	26 51 00.00 40		

1	PRE-CONSTRUCTION INSPECTIONS	NA	QC REP (INITIALS	DATE	QC REP (INITIALS	DATE
1.1	Have the DFOW specifications and drawings been reviewed with the understanding of specified requirements?					
1.2	Have the CQCP and AHA been reviewed with the comprehension and awareness of their Requirements?					
1.3	Have all pre-construction submittals and work plans been approved for this DFOW by the District?					
1.4	Have all RFIs been answered, reviewed and understood by the appropriate CQC Staff, Superintendant and required subcontractor?					
1.5	Has previous work been completed to enable this DFOW to begin without covering up non-compliance work?					
1.6	Has any and all preliminary work been completed in order to begin work for this DFOW?					
1.7	Have all as-builts been recorded from previous DFOW?					
1.8	Materials: Do all materials and equipment conform to the specification?					
1.9	Have all materials and equipment been handled and stored in accordance with the project specifications and the manufacturer's recommendations of requirements?					
1.10	Has the contractor received all required written approvals by the District to begin work for this DFOW?					
1.11	Field Applied Painting: Has the contractor painted electrical equipment as required to match finish of adjacent surfaces or to meet the indicated or specified safety criteria? (Specify painting in Section 09 06 90 PROTECTIVE COATINGS.)					
1.12	Has the Preparatory Control Phase Inspection been performed and properly documented for this DFOW?					

IF ANY OF THE ABOVE REQUIREMENTS WERE MARKED NO, EXPLAIN:

2	CONSTRUCTION INSPECTIONS	NA	QC REP (INITIALS	DATE	QC REP (INITIALS	DATE
2.1	Has the Initial Control Phase Inspection been performed for this DFOW?					
2.2	Are the DQCRs and Daily Safety Reports current and complete with the correct information documenting this DFOW?					
2.3	Installation -General: Has the contractor ensure all electrical installations conform to IEEE C2, NFPA 70, and to the requirements specified?					
2.4	Installation -Lamps: Has the contractor delivered, installed, replaced and tested lamps in accordance to 3.2.1 of section 26 51 00.00 40?					
2.5	Installation -LED Lighting Fixtures: Has the contractor installed lighting fixtures in accordance with 3.2.2 of section 26 51 00.00 40?					
2.6	Installation -Suspended Fixtures: Has the contractor installed suspended lighting fixtures in accordance with 3.2.3 of section 26 51 00.00 40?					
2.7	Field Quality Control: Upon completion of installation, has the contractor verified that equipment is properly installed, connected, and adjusted?					
2.8	Field Quality Control: Has the contractor conducted an operating test to show that equipment operates in accordance with requirements of section 26 52 00.00 40?					
2.9	Field Testing: Has the contractor demonstrated that all LED lighting fixtures and their accessories, including lowering devices, operate satisfactorily in the presence of the District?					
2.10	Field Testing: Has the contractor performed operational tests in the presence of the District and in accordance with referenced standards in this section?					

IF ANY OF THE ABOVE REQUIREMENTS WERE MARKED NO, EXPLAIN:

3	POST-CONSTRUCTION INSPECTIONS	NA	QC REP (INITIALS	DATE	QC REP (INITIALS	DATE
3.1	Has the Final Punch List been completed and provided to the District for this DFOW?					
3.2	Has the Pre-Final Punch List been completed and submitted for this DFOW?					
3.3	Has the Final Follow-up Control Phase Inspection been performed for this DFOW?					
3.4	Has the Final Acceptance Inspection been performed for this DFOW?					

3.5	Have all asbuilts been recorded for this DFOW?						
3.6	Maintenance: Has the contractor submitted operation and maintenance data in accordance with Section 01 78 05 OPERATION AND MAINTENANCE INFORMATION and as specified herein, showing all light fixtures, control modules, control zones, occupancy sensors, light level sensors, power packs, dimming ballasts, schematic diagrams and all interconnecting control wire, conduit, and associated hardware?						
3.7	Maintenance: Has the contractor submitted documentation that includes contact information, summary of procedures, and the limitations and conditions applicable to the project, indicating manufacturer's commitment to reclaim materials for recycling and/or reuse?						
3.8	Spare Lamps: Has the contractor provide 10 percent spare lamps of each type from the original manufacturer?						
3.9	WARRANTY: Has the warranty met the requirements specified in Section 01 61 03 EQUIPMENT AND MATERIALS and 26 51 00.00 40, 1.6 WARRANTY?						

IF ANY OF THE ABOVE REQUIREMENTS WERE MARKED NO, EXPLAIN:

CONTRACTOR'S QC REPRESENTATIVE'S SIGNATURE	DATE	DISTRICT'S QA REPRESENTATIVE'S SIGNATURE	DATE

DFOW INSPECTION REPORT

PROJECT NAME: C-43 WEST BASIN STORAGE RESERVOIR
CONTRACT NUMBER: CN XXXXXXXXX
PACKAGE 4 - CIVIL WORKS

DEFINEABLE FEATURE OF WORK:	EXTERIOR LIGHTING		
PRIME CONTRACTOR:		**DATE:**	
PRIME CONTRACTOR SUPERVISOR:			
QUALITY CONTROL SYSTEMS MANAGER:			
QC SPECIALIST:			
SUBCONTRACTOR:			
ACTIVITY:			
ACTIVITY LOCATION:			
ACTIVITY SPECIFICATIONS:	26 56 00		

1	PRE-CONSTRUCTION INSPECTIONS	NA	QC REP (INITIALS	DATE	QC REP (INITIALS	DATE
1.1	Have the DFOW specifications and drawings been reviewed with the understanding of specified requirements?					
1.2	Have the CQCP and AHA been reviewed with the comprehension and awareness of their Requirements?					
1.3	Have all pre-construction submittals and work plans been approved for this DFOW by the District?					
1.4	Have all RFIs been answered, reviewed and understood by the appropriate CQC Staff, Superintendant and required subcontractor?					
1.5	Has previous work been completed to enable this DFOW to begin without covering up non-compliance work?					
1.6	Has any and all preliminary work been completed in order to begin work for this DFOW?					
1.7	Have all as-builts been recorded from previous DFOW?					
1.8	Materials: Do all materials and equipment conform to the specification?					
1.9	Have all materials and equipment been handled and stored in accordance with the project specifications and the manufacturer's recommendations of requirements?					
1.10	Has the contractor received all required written approvals by the District to begin work for this DFOW?					
1.11	Has the Preparatory Control Phase Inspection been performed and properly documented for this DFOW?					

IF ANY OF THE ABOVE REQUIREMENTS WERE MARKED NO, EXPLAIN:

2	CONSTRUCTION INSPECTIONS	NA	QC REP (INITIALS	DATE	QC REP (INITIALS	DATE
2.1	Has the Initial Control Phase Inspection been performed for this DFOW?					
2.2	Are the DQCRs and Daily Safety Reports current and complete with the correct information documenting this DFOW?					
2.3	Electrical Installation: Does electrical installation conform to IEEE C2, NFPA 70, and to the requirements specified?					
2.4	Concrete Poles: Are concrete poles installed according to pole Manufacturer's instructions?					
2.5	Pole Setting: Are poles in straight runs in a straight line?					
2.6	Pole Setting: Are holes dug large enough to permit the proper use of tampers to the full depth of the hole?					
2.7	Pole Setting: Is backfill placed in the holes in 6 inch maximum layers and thoroughly tamped? (Place surplus earth around the pole in a conical shape and pack tightly to drain water away.)					
2.8	Photocell Switch Aiming: Has switch been installed according to Manufacturer's recommendations?					
2.9	Grounding: Have noncurrent-carrying parts of equipment including metal poles, luminaires, mounting arms, brackets and metallic enclosures been grounded as specified in Section 33 71 02 UNDERGROUND ELECTRICAL DISTRIBUTION?					
2.10	Field Applied Painting: Has electrical equipment been painted as required to match finish of adjacent surfaces or to meet the indicated or specified safety criteria and as specified in Section 09 06 90 PAINTS AND COATINGS?					
2.11	Field Quality Control: Upon completion of installation, has the contractor verified that equipment is properly installed, connected, and adjusted?					
2.12	Field Quality Control: Has the contractor conducted an operating test after 100 hours of burn-in time to show that the equipment operates in accordance with the requirements of Section 26 56 00?					

IF ANY OF THE ABOVE REQUIREMENTS WERE MARKED NO, EXPLAIN:

3	POST-CONSTRUCTION INSPECTIONS	NA	QC REP (INITIALS	DATE	QC REP (INITIALS	DATE
3.1	Has the Final Punch List been completed and provided to the District for this DFOW?					
3.2	Has the Pre-Final Punch List been completed and submitted for this DFOW?					
3.3	Has the Final Follow-up Control Phase Inspection been performed for this DFOW?					
3.4	Has the Final Acceptance Inspection been performed for this DFOW?					
3.5	Have all asbuilts been recorded for this DFOW?					
3.6	WARRANTY: Has the warranty met the requirements specified in Section 01 61 03 EQUIPMENT AND MATERIALS?					

IF ANY OF THE ABOVE REQUIREMENTS WERE MARKED NO, EXPLAIN:

CONTRACTOR'S QC REPRESENTATIVE'S SIGNATURE	DATE	DISTRICT'S QA REPRESENTATIVE'S SIGNATURE	DATE

DFOW INSPECTION REPORT

PROJECT NAME: C-43 WEST BASIN STORAGE RESERVOIR
CONTRACT NUMBER: CN XXXXXXXXX
PACKAGE 4 - CIVIL WORKS

DEFINEABLE FEATURE OF WORK:	LOW VOLTAGE MOTORS		
PRIME CONTRACTOR:		**DATE:**	
PRIME CONTRACTOR SUPERVISOR:			
QUALITY CONTROL SYSTEMS MANAGER:			
QC SPECIALIST:			
SUBCONTRACTOR:			
ACTIVITY:			
ACTIVITY LOCATION:			
ACTIVITY SPECIFICATIONS:	26 60 13.00 40		

1	PRE-CONSTRUCTION INSPECTIONS	NA	QC REP (INITIALS	DATE	QC REP (INITIALS	DATE
1.1	Have the DFOW specifications and drawings been reviewed with the understanding of specified requirements?					
1.2	Have the CQCP and AHA been reviewed with the comprehension and awareness of their Requirements?					
1.3	Have all pre-construction submittals and work plans been approved for this DFOW by the District?					
1.4	Have all RFIs been answered, reviewed and understood by the appropriate CQC Staff, Superintendant and required subcontractor?					
1.5	Has previous work been completed to enable this DFOW to begin without covering up non-compliance work?					
1.6	Has any and all preliminary work been completed in order to begin work for this DFOW?					
1.7	Have all as-builts been recorded from previous DFOW?					
1.8	Materials: Do all materials and equipment conform to the specification?					
1.9	Have all materials and equipment been handled and stored in accordance with the project specifications and the manufacturer's recommendations of requirements?					
1.10	Has the contractor received all required written approvals by the District to begin work for this DFOW?					
1.11	Has the Preparatory Control Phase Inspection been performed and properly documented for this DFOW?					

IF ANY OF THE ABOVE REQUIREMENTS WERE MARKED NO, EXPLAIN:

2	CONSTRUCTION INSPECTIONS		NA	QC REP (INITIALS	DATE	QC REP (INITIALS	DATE
2.1	Has the Initial Control Phase Inspection been performed for this DFOW?						
2.2	Are the DQCRs and Daily Safety Reports current and complete with the correct information documenting this DFOW?						
2.3	INSTALLATION: Has the contractor Installed, aligned, and connected motors in accordance with the equipment Manufacturer's instructions?						
2.4	INSTALLATION: Has the contractor mounted motors with bolts?						
2.5	INSTALLATION: Has the contractor ensured motor feet are coplanar within 0.001-inch, and base mounting points are accessible and adjustable to enable machine alignment?						
2.6	INSTALLATION: Have alignment jack bolts for motors been installed over 7.5 hp to enable alignment?						
2.7	Alignment: Before attempting alignment, has the contractor demonstrated that the load does not have any load/force imposed by the piping system? [Minimum alignment values (see chart at 3.1.1 of Specification 26 60 13.00 40) are for motor and load at normal running temperatures.]						
2.8	Alignment: Has the contractor ensured values are compensated for thermal growth? (Correct limited movement of the motor or load, commonly known as bolt-bound, to ensure alignment capability. Do not undercut hold down bolts in order to perform adjustment.)						
2.9	Alignment: Has commercially die-cut shims, without seams or folds, made of corrosion resistant stainless steel been provided? (Use no more than four shims at any single point.)						
2.10	Alignment: Has the motor been aligned and loaded to the minimum specifications of the chart in 3.1.1 of section 26 60 13.00 40? Has the motor and load alignment been performed under the direction of the Manufacturer's representative?						
2.11	Alignment: Has the alignment of motors been rechecked and adjusted as required after the motor has been in operation for not less than 48 hours?						
2.12	Alignment: Has the contractor provide written final alignment settings as part of the final test data?						
2.13	Field Quality Control: Has continuity tests been performed on all phases?						
2.14	Field Quality Control: Has insulation resistance and polarization index tests been performed on each phase of motor?						
2.15	Field Quality Control: Have inspections and test procedures been performed on all motors in accordance with NETA ATS and NETA MTS 7.15.1 for rotating machinery, AC motors?						

2.16	Field Quality Control: Has the contractor calculated the polarization index of each phase by dividing the 10 minute reading by the 1 minute reading? (Verify that the polarization index is less than 1.25. Reject any lower values and return the motor to the factory.)					
2.17	Field Quality Control -Vibration Analyzer: Has the contractor performed vibration testing in accordance with 3.2.2 VIBRATION TESTS of section 26 60 13.00 40?					
2.18	Field Quality Control: Has the contractor provided final test reports to the District, included with a cover letter/sheet clearly marked with the System name, Date, and the words "Final Test Reports - Forward to the Systems Engineer/Condition Monitoring Office/Predictive Testing Group for inclusion in the Maintenance Database?"					
2.19	Operation and Maintenance: Has the contractor submitted Manufacturer's operating and maintenance manual to the District no later than 30 days prior to final acceptance?					
2.20	Operation and Maintenance: Has the contractor submitted Manufacturer's instructions for Low-Voltage Motors including special provisions required to install equipment components and system packages, Including all special notices regarding detail impedances, hazards and safety precautions?					
2.21	Warranty: Has the contractor submitted Manufacturer's warranty to the District no later than 30 days prior to final acceptance?					

IF ANY OF THE ABOVE REQUIREMENTS WERE MARKED NO, EXPLAIN:

3	POST-CONSTRUCTION INSPECTIONS	NA	QC REP (INITIALS	DATE	QC REP (INITIALS	DATE
3.1	Has the Final Punch List been completed and provided to the District for this DFOW?					
3.2	Has the Pre-Final Punch List been completed and submitted for this DFOW?					
3.3	Has the Final Follow-up Control Phase Inspection been performed for this DFOW?					
3.4	Has the Final Acceptance Inspection been performed for this DFOW?					
3.5	Have all asbuilts been recorded for this DFOW?					
3.6	WARRANTY: Has the warranty met the requirements specified in Section 01 61 03 EQUIPMENT AND MATERIALS?					

IF ANY OF THE ABOVE REQUIREMENTS WERE MARKED NO, EXPLAIN:

CONTRACTOR'S QC REPRESENTATIVE'S SIGNATURE	DATE	DISTRICT'S QA REPRESENTATIVE'S SIGNATURE	DATE

DFOW INSPECTION REPORT

PROJECT NAME: C-43 WEST BASIN STORAGE RESERVOIR
CONTRACT NUMBER: CN XXXXXXXXX
PACKAGE 4 - CIVIL WORKS

DEFINEABLE FEATURE OF WORK:	UNDERGROUND ELECTRIC DISTRIBUTION		
PRIME CONTRACTOR:		**DATE:**	
PRIME CONTRACTOR SUPERVISOR:			
QUALITY CONTROL SYSTEMS MANAGER:			
QC SPECIALIST:			
SUBCONTRACTOR:			
ACTIVITY:			
ACTIVITY LOCATION:			
ACTIVITY SPECIFICATIONS:	33 71 02.00 10		

1	PRE-CONSTRUCTION INSPECTIONS	NA	QC REP (INITIALS	DATE	QC REP (INITIALS	DATE
1.1	Have the DFOW specifications and drawings been reviewed with the understanding of specified requirements?					
1.2	Have the CQCP and AHA been reviewed with the comprehension and awareness of their Requirements?					
1.3	Have all pre-construction submittals and work plans been approved for this DFOW by the District?					
1.4	Have all RFIs been answered, reviewed and understood by the appropriate CQC Staff, Superintendant and required subcontractor?					
1.5	Has previous work been completed to enable this DFOW to begin without covering up non-compliance work?					
1.6	Has any and all preliminary work been completed in order to begin work for this DFOW?					
1.7	Have all as-builts been recorded from previous DFOW?					
1.8	Materials: Do all materials and equipment conform to the specification?					
1.9	Have all materials and equipment been handled and stored in accordance with the project specifications and the manufacturer's recommendations of requirements?					
1.10	Has the contractor received all required written approvals by the District to begin work for this DFOW?					
1.11	Has the Preparatory Control Phase Inspection been performed and properly documented for this DFOW?					

IF ANY OF THE ABOVE REQUIREMENTS WERE MARKED NO, EXPLAIN:

2	CONSTRUCTION INSPECTIONS		NA	QC REP (INITIALS	DATE	QC REP (INITIALS	DATE
2.1	Has the Initial Control Phase Inspection been performed for this DFOW?						
2.2	Are the DQCRs and Daily Safety Reports current and complete with the correct information documenting this DFOW?						
2.3	INSTALLATION LOW VOLTAGE- Has the contractor installed equipment and devices in accordance with the manufacturer's published instructions and with the requirements and recommendations of NFPA 70 and IEEE C2 as applicable?						
2.4	INSTALLATION LOW VOLTAGE- Has the contractor installed telecommunications in accordance with TIA-758 and RUS Bull 1751F-644?						
2.5	CABLE INSPECTION LOW VOLTAGE- Has the contractor inspected each cable reel for correct storage positions, signs of physical damage, and broken end seals prior to installation in accordance with Section 33 71 02, 3.2 CABLE INSPECTION LOW VOLTAGE?						
2.6	UNDERGROUND CONDUITS SUPPLYING AND LEAVING BUILDINGS- Has the contractor installed underground feeders and conduit in accordance with section 33 71 02, 3.3 UNDERGROUND CONDUITS SUPPLYING AND LEAVING BUILDINGS?						
2.7	UNDERGROUND STRUCTURE CONSTRUCTION- Has the contractor provided standard type cast-in-place construction as specified and as indicated, or precast construction as specified in section 33 71 02 and drawings?						
2.8	UNDERGROUND STRUCTURE CONSTRUCTION- Do horizontal concrete surfaces of floors have smooth trowel finishes?						
2.9	UNDERGROUND STRUCTURE CONSTRUCTION- Has the contractor cured concrete by applying two coats of white pigmented membrane forming-curing compound in strict accordance with the manufacturer's printed instructions? (Curing compound must conform to ASTM C309.)						
2.10	UNDERGROUND STRUCTURE CONSTRUCTION- Do covers for underground structures fit the frames without undue play?						
2.11	UNDERGROUND STRUCTURE CONSTRUCTION- Are all castings free from warp and blow holes that may impair strength or appearance?						
2.12	UNDERGROUND STRUCTURE CONSTRUCTION- Do all exposed metal have a smooth finish and sharp lines and arises?						
2.13	Field Painting- Are all cast-iron frames and covers, not buried in concrete or masonry, cleaned of mortar, rust, grease, dirt and other deleterious materials, and given a coat of bituminous paint?						
2.14	UNDERGROUND CONDUIT AND DUCT SYSTEMS- Do all conduits run in straight lines except where a change of direction is necessary?						

2.15	UNDERGROUND CONDUIT AND DUCT SYSTEMS- Has the contractor provided numbers and sizes of ducts as indicated in the drawings?						
2.16	UNDERGROUND CONDUIT AND DUCT SYSTEMS- Has the contractor provided the proper copper grounding conductor and installed as specified in section 33 71 02, 3.5.1 and as indicated on the drawings?						
2.17	UNDERGROUND CONDUIT AND DUCT SYSTEMS- Do the ducts have a continuous slope downward toward underground structures and away from buildings, laid with a minimum slope of 3 inches per 100 feet?						
2.18	UNDERGROUND CONDUIT AND DUCT SYSTEMS- Has the contractor performed changes in ductbank direction as specified in section 33 71 02, 3.5.1 Requirements?						
2.19	UNDERGROUND CONDUIT AND DUCT SYSTEMS- Treatment: Have ducts been cleened and taken care of as specified in section 33 71 02, 3.5.2 Treatment?						
2.20	UNDERGROUND CONDUIT AND DUCT SYSTEMS- Conduit Cleaning: Has conduit been cleened and taken care of as specified in section 33 71 02, 3.5.3 Conduit Cleaning?						
2.21	UNDERGROUND CONDUIT AND DUCT SYSTEMS- Galvanized Conduit Concrete Penetrations: Have galvanized conduits which penetrate concrete (slabs, pavement, and walls) in wet locations been PVC coated and extend from at least 2 inches within the concrete to the first coupling or fitting outside the concrete (minimum of 6 inches from penetration).						
2.22	UNDERGROUND CONDUIT AND DUCT SYSTEMS- Multiple Conduits: Has the contractor separated multiple conduits as specified in section 33 71 02, 3.5.5 Multiple Conduits?						
2.23	UNDERGROUND CONDUIT AND DUCT SYSTEMS- Conduit Plugs and Pull Rope: Do new conduit indicated as being unused or empty provided with plugs on each end, containing a weephole or screen to allow water drainage with a plastic pull rope provide having 3 feet of slack at each end of unused or empty conduits?						
2.24	UNDERGROUND CONDUIT AND DUCT SYSTEMS- Conduit and Duct Without Concrete Encasement: Has the contractor installed ducts and conduits in areas without concrete encasements in accordance with section 33 71 02, 3.5.7 Conduit and Duct Without Concrete Encasement?						
2.25	UNDERGROUND CONDUIT AND DUCT SYSTEMS- Encasement Under Roads and Structures: Under roads and/or paved areas, has the contractor installed conduits in concrete encasement of rectangular cross-section providing a minimum of 3 inch concrete cover around duct with the concrete encasement extend at least 5 feet beyond the edges of paved areas and roads, and 12 feet beyond the rails on each side of railroad tracks and with depths to top of the concrete envelope not less than 24 inches below finished grade?						
2.26	UNDERGROUND CONDUIT AND DUCT SYSTEMS- Directional Boring: Are all HDPE conduits installed below the frostline and as specified in section 33 71 02, 3.5.7.2 Directional Boring?						

2.27	UNDERGROUND CONDUIT AND DUCT SYSTEMS- Duct Encased in Concrete: Has the contractor constructed underground duct lines of individual conduits encased in concrete as specified in section 33 71 02, 3.5.8 Duct Encased in Concrete, along with the casing chart?						
2.28	GROUNDING SYSTEMS- Grounding Electrodes: Has the contractor provided cone pointed driven ground rods driven full depth plus 12 inches, installed to provide an earth ground of the appropriate value for the particular equipment being grounded and followed the specifications of 33 71 02, 3.6.1 Grounding Electrodes?						
2.29	GROUNDING SYSTEMS- Grounding Connections: Has the contractor made grounding connections which are buried or otherwise normally inaccessible, by exothermic weld or compression connector in accordance with section 33 71 02, 3.6.2 Grounding Connections?						
2.30	GROUNDING SYSTEMS- Grounding Conductors: Has the contractor provided bare grounding conductors, except where installed in conduit with associated phase conductors in accordance with section 33 71 02, 3.6.3 Grounding?						
2.31	GROUNDING SYSTEMS- Fence Grounding: Has the contractor provided grounding for fences as indicated on the drawings and in accordance with section 33 71 02, 3.6.4 Fence Grounding?						
2.32	EXCAVATING, BACKFILLING, AND COMPACTING- Unpaved Surfaces: Has the contractor restored areas to their original elevation and condition unpaved surfaces disturbed during installation of duct or direct burial cable as specified in section 33 71 02, 3.7.1.1 Unpaved Surfaces?						
2.33	EXCAVATING, BACKFILLING, AND COMPACTING- Paving Repairs: Where trenches, pits, or other excavations were made in existing roadways and other areas of pavement where surface treatment of any kind exists, has the contractor restored such surface treatment or pavement the same thickness and in the same kind as previously existed, except as otherwise specified, and to match and tie into the adjacent and surrounding existing surfaces?						
2.34	CAST-IN-PLACE CONCRETE- Has the contractor provided concrete in accordance with Section 03 31 01.00 10 CAST- IN-PLACE STRUCTURAL CONCRETE FOR CIVIL WORKS?						
2.35	CAST-IN-PLACE CONCRETE- Concrete Slabs (Pads) for Equipment: Has the contractor provided slabs with the dimensions specified in section 33 71 02, 3.8.1 Concrete Slabs (Pads) for Equipment?						
2.36	CAST-IN-PLACE CONCRETE- Sealing: Upon installation complete, has the contractor sealed all conduit and other entries into the equipment enclosure with an approved sealing compound?						
2.37	FIELD QUALITY CONTROL- Low Voltage Cables, 600-Volt: After installation of cable, splices and terminations and before terminating to equipment or splicing to existing circuits, has the contractor performed tests in accordance with the manufacturer's recommendations, and included the visual and mechanical inspections and electrical tests specified in section 33 71 02, 3.9.1.1 Low Voltage Cables, 600-Volt, and performed in accordance with NETA ATS?						

2.38	FIELD QUALITY CONTROL- Grounding System: Has the contractor performed visual and mechanical inspection of the ground system for compliance with contract plans and specifications?					
2.39	FIELD QUALITY CONTROL- Grounding System: Has the contractor performed ground-impedance measurements utilizing the fall-of-potential method in accordance with IEEE 81 and as specified in section 33 71 02, 3.9.1.2 Grounding System?					
2.40	FIELD QUALITY CONTROL- Follow-Up Verification: Upon completion of acceptance checks and tests, has the contractor shown by demonstration in service that circuits and devices are in good operating condition and properly performing the intended function?					

IF ANY OF THE ABOVE REQUIREMENTS WERE MARKED NO, EXPLAIN:

3	POST-CONSTRUCTION INSPECTIONS	NA	QC REP (INITIALS	DATE	QC REP (INITIALS	DATE
3.1	Has the Final Punch List been completed and provided to the District for this DFOW?					
3.2	Has the Pre-Final Punch List been completed and submitted for this DFOW?					
3.3	Has the Final Follow-up Control Phase Inspection been performed for this DFOW?					
3.4	Has the Final Acceptance Inspection been performed for this DFOW?					
3.5	Have all asbuilts been recorded for this DFOW?					
3.6	WARRANTY: Has the warranty met the requirements specified in Section 01 61 03 EQUIPMENT AND MATERIALS?					

IF ANY OF THE ABOVE REQUIREMENTS WERE MARKED NO, EXPLAIN:

CONTRACTOR'S QC REPRESENTATIVE'S SIGNATURE	DATE	DISTRICT'S QA REPRESENTATIVE'S SIGNATURE	DATE

DFOW INSPECTION REPORT

PROJECT NAME: C-43 WEST BASIN STORAGE RESERVOIR
CONTRACT NUMBER: CN XXXXXXXXX
PACKAGE 4 - CIVIL WORKS

DEFINEABLE FEATURE OF WORK:	PROCESS CONTROL SYSTEMS		
PRIME CONTRACTOR:		**DATE:**	
PRIME CONTRACTOR SUPERVISOR:			
QUALITY CONTROL SYSTEMS MANAGER:			
QC SPECIALIST:			
SUBCONTRACTOR:			
ACTIVITY:			
ACTIVITY LOCATION:			
ACTIVITY SPECIFICATIONS:	40 95 00		

1	PRE-CONSTRUCTION INSPECTIONS	NA	QC REP (INITIALS	DATE	QC REP (INITIALS	DATE
1.1	Have the DFOW specifications and drawings been reviewed with the understanding of specified requirements?					
1.2	Have the CQCP and AHA been reviewed with the comprehension and awareness of their Requirements?					
1.3	Have all pre-construction submittals and work plans been approved for this DFOW by the District?					
1.4	Have all RFIs been answered, reviewed and understood by the appropriate CQC Staff, Superintendant and required subcontractor?					
1.5	Has previous work been completed to enable this DFOW to begin without covering up non-compliance work?					
1.6	Has any and all preliminary work been completed in order to begin work for this DFOW?					
1.7	Have all as-builts been recorded from previous DFOW?					
1.8	Materials: Do all materials and equipment conform to the specification?					
1.9	Have all materials and equipment been handled and stored in accordance with the project specifications and the manufacturer's recommendations of requirements?					
1.10	Has the contractor received all required written approvals by the District to begin work for this DFOW?					
1.11	Has the Preparatory Control Phase Inspection been performed and properly documented for this DFOW?					

IF ANY OF THE ABOVE REQUIREMENTS WERE MARKED NO, EXPLAIN:

2	CONSTRUCTION INSPECTIONS		NA	QC REP (INITIALS	DATE	QC REP (INITIALS	DATE
2.1	Has the Initial Control Phase Inspection been performed for this DFOW?						
2.2	Are the DQCRs and Daily Safety Reports current and complete with the correct information documenting this DFOW?						
2.3	PLC Programming- Has the contractor requested the IP address required for programming through the Request For Information (RFI) procedure? Has the District provided the IP address?						
2.4	PLC Programming- SFWMD SCADA Design and Installation will provide a list of the Modbus Registers and port configurations within the Modbus Card in the MCP to provide for the PLC to RTU connections. Has the contractor requested and received this information through the formal RFI process and demonstrated equipment configuration and functionality as part of the FAT?						
2.5	Sequence of Operation- Has the contractor studied the operation and sequence of local equipment controls, as a part of the conditions report, and noted any deviations from the described sequences of operation on the contract drawings? Has the contractor performed necessary adjustments to make the equipment operate in an optimum manner and fully documented changes made?						
2.6	SOFTWARE INSTALLATION- Has the contractor loaded software required for an operational control system, including databases (for points specified and shown), operational parameters, and system, command, and application programs? Has the contractor adjusted, tuned, debugged, and commissioned all software and parameters for controlled systems to assure proper operation in accordance with the sequences of operation and database tables?						
2.7	CONTROL DRAWINGS- Has the contractor provided control drawings as specified in section 40 95 00, 3.3 Control Drawings?						
2.8	CONTROL DRAWINGS- Has the contractor posted operating instructions as specified in section 40 95 00, 3.3 Control Drawings?						
2.9	FIELD TESTING AND ADJUSTING EQUIPMENT- Has the contractor obtained the required written permission from the District before proceeding with testing?						
2.10	FIELD TESTING AND ADJUSTING EQUIPMENT- Has the contractor provided a NETA certified testing agency for the testing?						

2.11	Performance Verification Test (PVT)- Has the contractor adhered to section 40 95 00, 3.4.2 Performance Verification Test (PVT) before, during and after the testing?						
2.12	Endurance Test- Has the contractor adhered to section 40 95 00, 3.4.3 Endurance Test before, during and after the testing?						
2.13	Phase I (Testing)- Has the contractor conducted the test 24 hours per day, 7 days per week, for 14 consecutive calendar days, including holidays, and the system operate as specified in section 40 95 00, 3.4.3.1?						
2.14	Phase II (Assessment)- After the conclusion of Phase I, has the contractor identified failures, determined causes of failures, repaired failures, and delivered a written report to the District as specified in section 40 95 00, 3.4.3.2?						
2.15	Phase II (Assessment)- After delivering the written report, did the contractor convene a test review meeting and was the meeting held?						
2.16	Phase II (Assessment)- Did the contractor perform any retesting based on the written report and the test review meeting? If so, was the contractor in receipt of written notification by the District?						
2.17	Phase II (Assessment)- After the conclusion of any retesting which the District may have required, did the contractor repeat the Phase II assessment as if Phase I had just been completed?						
2.18	FIELD TRAINING- Has the contractor provided training manuals, audiovisual equipment and other training supplies and material as specified in section 40 95 00, 3.5?						
2.19	FIELD TRAINING- Has the contractor provided training as specified in section 40 95 00, 3.5?						
2.20	Preliminary Operator Training- Has the contractor has the contractor performed the Preliminary Operator Training as specified in section 40 95 00, 3.5.1?						
2.21	Additional Operator Training- Has the contractor has the contractor performed the Additional Operator Training as specified in section 40 95 00, 3.5.2?						
2.22	Specialized Training- Has the contractor has the contractor performed the Specialized Training as specified in section 40 95 00, 3.5.3?						

IF ANY OF THE ABOVE REQUIREMENTS WERE MARKED NO, EXPLAIN:

3	POST-CONSTRUCTION INSPECTIONS	NA	QC REP (INITIALS	DATE	QC REP (INITIALS	DATE
3.1	Has the Final Punch List been completed and provided to the District for this DFOW?					
3.2	Has the Pre-Final Punch List been completed and submitted for this DFOW?					
3.3	Has the Final Follow-up Control Phase Inspection been performed for this DFOW?					
3.4	Has the Final Acceptance Inspection been performed for this DFOW?					
3.5	Have all asbuilts been recorded for this DFOW?					
3.6	WARRANTY: Has the warranty met the requirements specified in Section 01 61 03 EQUIPMENT AND MATERIALS?					

IF ANY OF THE ABOVE REQUIREMENTS WERE MARKED NO, EXPLAIN:

CONTRACTOR'S QC REPRESENTATIVE'S SIGNATURE	DATE	DISTRICT'S QA REPRESENTATIVE'S SIGNATURE	DATE

DFOW INSPECTION REPORT

PROJECT NAME: C-43 WEST BASIN STORAGE RESERVOIR
CONTRACT NUMBER: CN XXXXXXXXX
PACKAGE 4 - CIVIL WORKS

DEFINEABLE FEATURE OF WORK:	PROTECTIVE COATINGS		
PRIME CONTRACTOR:		**DATE:**	
PRIME CONTRACTOR SUPERVISOR:			
QUALITY CONTROL SYSTEMS MANAGER:			
QC SPECIALIST:			
SUBCONTRACTOR:			
ACTIVITY:			
ACTIVITY LOCATION:			
ACTIVITY SPECIFICATIONS:	09 06 90		

1	PRE-CONSTRUCTION INSPECTIONS	NA	QC REP (INITIALS	DATE	QC REP (INITIALS	DATE
1.1	Have the DFOW specifications and drawings been reviewed with the understanding of specified requirements?					
1.2	Have the CQCP and AHA been reviewed with the comprehension and awareness of their Requirements?					
1.3	Have all pre-construction submittals and work plans been approved for this DFOW by the District?					
1.4	Have all RFIs been answered, reviewed and understood by the appropriate CQC Staff, Superintendant and required subcontractor?					
1.5	Has previous work been completed to enable this DFOW to begin without covering up non-compliance work?					
1.6	Has any and all preliminary work been completed in order to begin work for this DFOW?					
1.7	Have all as-builts been recorded from previous DFOW?					
1.8	Materials: Do all materials and equipment conform to the specification?					
1.9	Have all materials and equipment been handled and stored in accordance with the project specifications and the manufacturer's recommendations of requirements?					
1.10	Has the contractor received all required written approvals by the District to begin work for this DFOW?					
1.11	Is the person performing the coating work an SSPC certified contractor having a minimum of Category QP 1 certification for Work without hazardous paint removal, and Category QP 2 certification for Work involving hazardous paint removal? (See section 09 06 90, 1.5.1 Applicator Qualifications for more details.)					

1.12	Pre-painting Conference- Before the start of field painting has a Pre-Painting Conference been conducted with the District, the CM, the contractor, the coating applicator, and the coating Manufacturer's technical representative with details of surface preparations and coating systems to ensure understanding and agreement by all parties for compliance?						
1.13	Has the Preparatory Control Phase Inspection been performed and properly documented for this DFOW?						

IF ANY OF THE ABOVE REQUIREMENTS WERE MARKED NO, EXPLAIN:

2	CONSTRUCTION INSPECTIONS		NA	QC REP (INITIALS	DATE	QC REP (INITIALS	DATE
2.1	Has the Initial Control Phase Inspection been performed for this DFOW?						
2.2	Are the DQCRs and Daily Safety Reports current and complete with the correct information documenting this DFOW?						
2.3	Do the colors of finish coatings match accepted color samples?						
2.4	SURFACES TO BE COATED - Interior Surfaces: Has the coating system specified on interior surfaces been applied as shown in project Specification Section 09 06 90 2.4 SURFACES TO BE COATED - Interior Surfaces?						
2.5	Protective Coating System - Has each surface to be coated been verified as to the appropriate Protective Coating System to be used for each individual surface?						
2.6	Surface Preparation -Have all surfaces been prepared for coating in accordance with project Specification Section 09 06 90 3.2 Preparation For Coating and 3.3 Surface Preparation?						
2.7	Application - Has the Contractor applied coatings in accordance with coating Manufacturer's recommendations and project Specification Section 09 06 60 3.4 Application?						
2.8	Environmental Conditions - Has the atmospheric temperature been 50 degrees Fahrenheit or higher during application?						
2.9	Environmental Conditions - Has the relative humidity been less than 85% and the temperature of the surface to be painted at least five (5) degrees above the dew point?						
2.10	Has the Contractor provided and used a wet-film gauge to check each application approximately every fifteen (15) minutes in order to immediately correct film thickness under or over that specified?						
2.11	On ferrous surfaces, have measurements been made with one of the thickness gauges listed in project Specification Section 09 06 90 3.5?						
2.12	Has the thickness gauge been calibrated on metal practically identical in composition and surface preparation to that being coated and be of substantially the same thickness, except that for measurements on metal thicker than 1/4 inch, the instrument may be calibrated on metal with a minimum thickness of 1/4 inch?						

2.13	When calibrating any of the gauges for making film measurements of over three (3) mils, has the calibrating thickness standards (shims) been of non-metallic composition?						
2.14	Has the Contractor adhered to the following? Where only one thickness criterion is specified, the calibrating shim thickness shall closely approximate the specified thickness, but where both thicknesses are specified, the shim's thickness shall closely approximate an average of the two.						
2.15	Has the Contractor, obtained from the Manufacturer or supplier of the gauge, calibrating instructions, thickness standards and, in the case of the Mikrotest gauge, a calibrating tool?						
2.16	Has the Contractor used holiday or pinhole detector on systems over metal substrates to detect and correct voids when indicated on Protective Coating System sheets?						
2.17	Has the Contractor furnished a sling psychrometer and performed periodic checks on both relative humidity and temperature limits?						
2.18	Has the Contractor checked the temperature of the substrates at regular intervals to be certain surface is five degrees Fahrenheit or more above the dew point?						

IF ANY OF THE ABOVE REQUIREMENTS WERE MARKED NO, EXPLAIN:

3	POST-CONSTRUCTION INSPECTIONS	NA	QC REP (INITIALS	DATE	QC REP (INITIALS	DATE
3.1	Has the Final Punch List been completed and provided to the District for this DFOW?					
3.2	Has the Pre-Final Punch List been completed and submitted for this DFOW?					
3.3	Has the Final Follow-up Control Phase Inspection been performed for this DFOW?					
3.4	Has the Final Acceptance Inspection been performed for this DFOW?					
3.5	Have all asbuilts been recorded for this DFOW?					
3.6	WARRANTY: Has the warranty met the requirements specified in Section 01 61 03 EQUIPMENT AND MATERIALS?					

IF ANY OF THE ABOVE REQUIREMENTS WERE MARKED NO, EXPLAIN:

CONTRACTOR'S QC REPRESENTATIVE'S SIGNATURE	DATE	DISTRICT'S QA REPRESENTATIVE'S SIGNATURE	DATE

DFOW INSPECTION REPORT

PROJECT NAME: C-43 WEST BASIN STORAGE RESERVOIR
CONTRACT NUMBER: CN XXXXXXXXX
PACKAGE 4 - CIVIL WORKS

DEFINEABLE FEATURE OF WORK:	VERTICAL PROFILING SYSTEM		
PRIME CONTRACTOR:		**DATE:**	
PRIME CONTRACTOR SUPERVISOR:			
QUALITY CONTROL SYSTEMS MANAGER:			
QC SPECIALIST:			
SUBCONTRACTOR:			
ACTIVITY:			
ACTIVITY LOCATION:			
ACTIVITY SPECIFICATIONS:	26 09 31		

1	PRE-CONSTRUCTION INSPECTIONS	NA	QC REP (INITIALS	DATE	QC REP (INITIALS	DATE
1.1	Have the DFOW specifications and drawings been reviewed with the understanding of specified requirements?					
1.2	Have the CQCP and AHA been reviewed with the comprehension and awareness of their Requirements?					
1.3	Have all pre-construction submittals and work plans been approved for this DFOW by the District?					
1.4	Have all RFIs been answered, reviewed and understood by the appropriate CQC Staff, Superintendant and required subcontractor?					
1.5	Has previous work been completed to enable this DFOW to begin without covering up non-compliance work?					
1.6	Has any and all preliminary work been completed in order to begin work for this DFOW?					
1.7	Have all as-builts been recorded from previous DFOW?					
1.8	Materials: Do all materials and equipment conform to the specification?					
1.9	Have all materials and equipment been handled and stored in accordance with the project specifications and the manufacturer's recommendations of requirements?					
1.10	Has the contractor received all required written approvals by the District to begin work for this DFOW?					
1.11	Has the Preparatory Control Phase Inspection been performed and properly documented for this DFOW?					

IF ANY OF THE ABOVE REQUIREMENTS WERE MARKED NO, EXPLAIN:

2	CONSTRUCTION INSPECTIONS	NA	QC REP (INITIALS	DATE	QC REP (INITIALS	DATE
2.1	Has the Initial Control Phase Inspection been performed for this DFOW?					
2.2	Are the DQCRs and Daily Safety Reports current and complete with the correct information documenting this DFOW?					
2.3	Has the contractor furnished and installed cable, wiring, conduit, and components as required and as shown on the drawings and specified to power, control, and monitor each profiler installation?					
2.4	Has the equipment been grounded in accordance with NEC, latest edition?					
2.5	Has the contractor followed vendors Configuration and Deployment Instructions for YSI Model 6600EDS Sondes installation of sonde, probes, and ancillary equipment furnished with assembly?					
2.6	Has the required YSI Service Technician assisted the contractor in installation and set-up of the profiling system?					
2.7	Has the contractor installed the Stilling Well in accordance with section 26 09 31, 3.3B 1?					
2.8	Has the contractor installed the Mounted Winch Assembly in accordance with section 26 09 31, 3.3B 2?					
2.9	Has the contractor installed the Controller Assembly in accordance with section 26 09 31, 3.3B 3?					
2.10	FIELD TESTS- Upon the completion of the profiler installations, has the contractor procured the services of an authorized YSI service representative to functionally test each profiler installation?					
2.11	FIELD TESTS- Did the contractor notify the District 24 hours in advance of each test?					
2.12	FIELD TESTS- Did the field testing include testing up sampling routines?					
2.13	FIELD TESTS- Did the field testing include obtaining water quality data at various levels through automated routine?					
2.14	FIELD TESTS- Did the field testing include observing data on monitoring computer and verification of available 4-20 mA outputs from computer output card with the installed equipment?					
2.15	TRAINING- Has a YSI representative with significant training experience related to YSI Vertical Profiler System installation provided 8 hours of on-site training to personnel selected by the District for activities specified in section 26 09 31, 3.5?					

IF ANY OF THE ABOVE REQUIREMENTS WERE MARKED NO, EXPLAIN:

3	POST-CONSTRUCTION INSPECTIONS	NA	QC REP (INITIALS	DATE	QC REP (INITIALS	DATE
3.1	Has the Final Punch List been completed and provided to the District for this DFOW?					
3.2	Has the Pre-Final Punch List been completed and submitted for this DFOW?					
3.3	Has the Final Follow-up Control Phase Inspection been performed for this DFOW?					
3.4	Has the Final Acceptance Inspection been performed for this DFOW?					
3.5	Have all asbuilts been recorded for this DFOW?					
3.6	WARRANTY: Has the warranty met the requirements specified in Section 01 61 03 EQUIPMENT AND MATERIALS?					

IF ANY OF THE ABOVE REQUIREMENTS WERE MARKED NO, EXPLAIN:

CONTRACTOR'S QC REPRESENTATIVE'S SIGNATURE	DATE	DISTRICT'S QA REPRESENTATIVE'S SIGNATURE	DATE

Appendix D

CONCRETE SAMPLING TEST REPORT

Page No. ___of___

Project Name _____ Project Number **140404 - B2**

Test Date _____

LAB ID Number _____ **Number of Samples** _____ Set No. _____

Material Type ☐ Concrete ☐ Grout ☐ Mortar

GENERAL LOCATION

Footings ☐ **Deck Slab** ☐ **Slab** ☐ **Panels** ☐

Walls ☐ **Beams** ☐ **Columns** ☐ **Fill Cells** ☐ **Other** ☐

Test Location _____

Latitude _____ **Longitude** _____

Slump (in) _____ **Concrete Temp (F)** _____ **Time Sampled** _____

A C (%) _____ **Unit Weight (pcf)** _____

MIX DESIGN and TICKET DATA

Design Strength _____

Supplier _____

Ticket Number _____

Truck Number _____

Time Batched _____

Load Volume _____

Water Added _____

Authorized By _____

Mix Design No. _____

Slump (in) _____

Break Schedule (Age in Days)	Sample Type
	☐ **3x6 Cylinder**
	☐ **4x8 Cylinder**
	☐ **6x12 Cylinder**
	☐ **6x6x24 Beam**
	☐ **2x2 Cube**
	☐ **3x3x6 Prism**
	☐ **Other**

Remarks: _____

_____

RADISE International, LLC

Field Technician Name: _____

Signature of Technician:

4152 West Blue Heron Blvd, Suite 228, Riviera Beach, FL 33404 Ph: 561.841.0103 Fax: 561.841.0104 www.radise.net

RADISE
Infrastructure Engineers • Software Developers

CONCRETE MONITORING LOG

Date:
Tech:
Location:

Quantity Load/Cum.	Truck No.	Ticket No.	Time Batched	Discharge Complete Time	Initial Slump (in.)	Water added (Gal.)	Final Slump (in.)	Temp. °F	Air (%)	QC Cylinders Cast (Y/N)	QA Cylinders Cast (Y/N)

IN-PLACE DENSITY TEST REPORT

Page No. _____ of _____

Project Name: _____ Project Number: _____

Test Date: _____ Technician: _____

General Location: ☐ Building Pad ☐ Column Footing ☐ Roadway ☐ Utility Cut - Storm ☐ Utility Cut - Water main ☐ Curbs
☐ Site Fill ☐ Wall Footings ☐ Sidewalk ☐ Utility Cut - Sanitary ☐ Utility Cut - Force main ☐ Grade Beams
☐ Other: _____

Course: ☐ Embankment ☐ Backfill ☐ Structural Fill ☐ Filter Soil
☐ Subgrade ☐ Sub base ☐ Base Course

Test Depth Reference
☐ Feet NGVD / NAVD
☐ Feet Below Top of Existing Grade
☐ Feet Above Top of Pipe

Layer Thickness: _____ Moisture Range _____ Compaction Requirement: _____

Lot No.	Test Location	Test Depth	Proctor ID	Latitude	Longitude	Elevation / Depth (ft)	Moisture Count	Density Count	Wet Density (pcf)	Field Moisture (%)	Dry Density (pcf)	Compaction (%)	Results (Pass/Fail)	Original Test # (if Retest)

Moisture-Density Relationship Data:

Proctor ID	Maximum Dry Density	Optimum Moisture	Soil Description	LBR	Remarks

☐ Contractor Notified of Failing Tests ☐ Contractor Provided Copy of Density Report

Notes: _____

Standard Count : **MS** _____ **DS** _____ **Gauge Serial No.:** _____

4152 West Blue Heron Blvd, Suite 228, Riviera Beach, FL 33404 Ph:561-841.0103 Fax:561.841.0104 www.radise.net

Project:	Time on Site:
Client:	Time off Site:
Date:	☐ Cloudy ☐ Overcast ☐ Clear
Ambient Temp_____F	☐ Rain ☐ Humid ☐ Dry

CONCRETE

☐ Cancel Without Notice

☐ Concrete	No. of Sets_____	Samples per Set_____	Size_____	Test Time_____hrs
☐ Grout	No. of Sets_____	Samples per Set_____	Size_____	Test Time_____hrs
☐ Mortar	No. of Sets_____	Samples per Set_____	Size_____	Test Time_____hrs
☐ Standby	☐ Late Arrival of Concrete	☐ Late Arrival of Pump		Standby Time_____ hrs
Additional Tests	Slump_____	Temp_____	AC_____	Unit Wt._____

Notes:

DENSITIES

☐ Cancel Without Notice

No. of Tests_____	☐ Nuclear	☐ Sand Cone	☐ Other	Test Time_____hrs
Standby Time_____ hrs	☐ Area Not Ready For Testing		☐ Other	Standby Time_____hrs

Notes:

SAMPLE PICK-UP

☐ Cancel Without Notice

☐ Concrete	No. of Sets_____	☐ Proctor	No. of Samples_____	Test Time_____hrs
☐ Grout	No. of Sets_____	☐ LBR	No. of Samples_____	
☐ Mortar	No. of Sets_____	☐ Other	No. of Samples_____	
☐ Standby	☐ Area Not Ready For Sampling		☐ Other	Standby Time_____hrs

Notes:

MISCELLANEOUS

Technician:	Field Contact:
Signature:	Signature:

RADISE
Infrastructure Engineers • Software Developers

FIELD ACTIVITY REPORT

CHAIN OF CUSTODY

PROJECT NAME:
PROJECT NUMBER:

DATE: _____
SAMPLED BY: _____

RADISE No.	PROJECT SAMPLE No.	MATERIAL TYPE FILL/RIPRAP/CONCRETE	LAB REQUEST ATTACHED YES/NO	REMARKS

DROPPED OFF BY:_____

RECEIVED BY:_____

ORGANIZATION:_____

RADISE

4152 West Blue Heron Boulevard, Suite # 228 Riviera Beach, FL 33404 Ph. (561) 841-0103 Fax (561) 841-0104 URL: http:// www.radise.net

RADISE
Infrastructure Engineers • Software Developers

LABORATORY WORK ORDER (BASE & SUBBASE)

PROJECT NAME: **PROJECT NO:** **SAMPLING DATE:** ……

RADISE LAB ID: …… **PROJECT SAMPLE NO.:** …… **SOURCE:** ……

SAMPLING LOCATION: …… **LATITUDE:** …… **LONGITUDE:** ……

ASTM D 2216 As received Moisture Content	*ASTM C 117 Percent Passing No. 200*	*ASTM C 136 Grain Size Aggregate*	*AASHTO-T84 Specific Gravity & Absorption*	*ASTM D 4318 Atterberg Limits*	*ASTM D 2487 Soil Classification*	*ASTM D 2974- Organic Content*	*FM 5-514 Carbonate Content*	*FM 5-515 Limerock Bearing Ratio (LBR)*	*Lab Proctor*	
									AASHTO T224 Oversize Correction	*AASHTO T 180*

DEADLINE DATE: …… **REQUESTED BY:** ……**DATE:** ……..……..

MATERIAL TYPE: ☐ STABILIZED SUBGRADE ☐ BASE COURSE

REMARKS: ……..

Sieve Sizes ☐3” ☐2” ☐1.5” ☐1” ☐3/4” ☐3/8” ☐#4 ☐#8 ☐#10 ☐#16 ☐#20 ☐#40 ☐#50 ☐#60 ☐#100 ☐#140 ☐#200 ☐#270

RADISE
Infrastructure Engineers • Software Developers

LABORATORY WORK ORDER (FILL)

PROJECT NAME: **PROJECT NO:** **SAMPLING DATE:** ……

RADISE LAB ID: …… **PROJECT SAMPLE NO.:** …… **SOURCE:** ……

SAMPLING LOCATION: …… **LATITUDE:** …… **LONGITUDE:** ……

ASTM D 2216 As received Moisture Content	*ASTM D 1140 Percent Passing No. 200*	*ASTM D 422 Grain Size Aggregate*	*ASTM C 127 Specific Gravity & Absorption*	*ASTM D 4318 Atterberg Limits*	*ASTM D 2487 Soil Classification*	*ASTM D 2974 Organic Content*	*ASTM D 4253 & D 4254 Min –Max Index Density*	*Lab Proctor*		
								ASTM D4718 Oversize Correction	*ASTM D 698 (Standard)*	*ASTM D 1557 (Modified)*

DEADLINE DATE: …… **REQUESTED BY:** ……DATE: ……..……..

MATERIAL TYPE: ☐ EMBANKMENT FILL ☐ STRUCTURAL BACKFILL

REMARKS: ……..

Sieve Sizes ☐3” ☐2” ☐1.5” ☐1” ☐3/4” ☐3/8” ☐#4 ☐#8 ☐#10 ☐#16 ☐#20 ☐#40 ☐#50 ☐#60 ☐#100 ☐#140 ☐#200 ☐#270

4152 West Blue Heron Boulevard, Suite # 116, Riviera Beach, FL 33404 Ph. (561) 841-0103 Fax (561) 841-0104 URL: http:// www.radise.net

LABORATORY WORK ORDER (RIPRAP & BEDDING STONE)

PROJECT NAME: **PROJECT NO:** **SAMPLING DATE:** .....

RADISE LAB ID: ..... **PROJECT SAMPLE NO.:** ..... **SOURCE:** .....

SAMPLING LOCATION: ..... **LATITUDE:** ..... **LONGITUDE:** .....

ASTM C 117 Percent Passing No. 200	*ASTM C 136 Grain Size Aggregate*	*ASTM C 127 Specific Gravity*	*ASTM C 127, AASHTO-T85 Absorption*	*ASTM C 88 Soundness*	*AASHTO T 210 Durability Index*	*ASTM C 33 Aggregate Classification*	*FM 3-C 535 L.A. Abrasion*

DEADLINE DATE: ..... **REQUESTED BY:** .....**DATE:** .....

MATERIAL TYPE: ☐ RIPRAP ☐ BEDDING STONE

REMARKS: .....

Sieve Sizes ☐3" ☐2" ☐1.5" ☐1" ☐3/4" ☐3/8" ☐#4 ☐#8 ☐#10 ☐#16 ☐#20 ☐#40 ☐#50 ☐#60 ☐#100 ☐#140 ☐#200 ☐#270

CHAIN OF CUSTODY

PROJECT NAME:
PROJECT NUMBER:

DATE: _____
SAMPLED BY: _____

RADISE No.	PROJECT SAMPLE No.	MATERIAL TYPE FILL/RIPRAP/CONCRETE	LAB REQUEST ATTACHED YES/NO	REMARKS

DROPPED OFF BY:_____

RECEIVED BY:_____

ORGANIZATION:_____

RADISE

4152 West Blue Heron Boulevard, Suite # 228 Riviera Beach, FL 33404 Ph. (561) 841-0103 Fax (561) 841-0104 URL: http:// www.radise.net

RADISE International

Geotechnical and Software Consultants

LABORATORY WORK ORDER

PROJECT NAME: SAMPLING DATE: _____

PROJECT NUMBER: REQUESTED BY: _____

BORING No. & LOCATION	*SAMPLE No.*	*DEPTH (FEET)*	*MOISTURE CONTENT*	*FULL SIEVE*	*-200 WASH*	*Atterberg Limits*	*ORGANIC CONTENT*

4152 West Blue Heron Boulevard, Suite # 116, Riviera Beach, FL 33404 Ph. (561) 841-0103 Fax (561) 841-0104 URL: http:// www.radise.net

– This page intentionally left blank –

CONCRETE SAMPLING TEST REPORT

Page No. ___of___

Project Name _____ Project Number **140404 - B2**

Test Date _____

LAB ID Number _____ **Number of Samples** _____ Set No. _____

Material Type ☐ Concrete ☐ Grout ☐ Mortar

GENERAL LOCATION

Footings ☐ **Deck Slab** ☐ **Slab** ☐ **Panels** ☐

Walls ☐ **Beams** ☐ **Columns** ☐ **Fill Cells** ☐ **Other** ☐

Test Location _____

Latitude _____ **Longitude** _____

Slump (in) _____ **Concrete Temp (F)** _____ **Time Sampled** _____

A C (%) _____ **Unit Weight (pcf)** _____

MIX DESIGN and TICKET DATA

Design Strength _____

Supplier _____

Ticket Number _____

Truck Number _____

Time Batched _____

Load Volume _____

Water Added _____

Authorized By _____

Mix Design No. _____

Slump (in) _____

Break Schedule (Age in Days)	**Sample Type**
	☐ **3x6 Cylinder**
	☐ **4x8 Cylinder**
	☐ **6x12 Cylinder**
	☐ **6x6x24 Beam**
	☐ **2x2 Cube**
	☐ **3x3x6 Prism**
	☐ **Other**

Remarks: _____

_____

RADISE International, LLC

Field Technician Name: _____

Signature of Technician:

RADISE
Infrastructure Engineers • Software Developers

CONCRETE MONITORING LOG

Date:
Tech:
Location:

Quantity Load/Cum.	Truck No.	Ticket No.	Time Batched	Discharge Complete Time	Initial Slump (in.)	Water added (Gal.)	Final Slump (in.)	Temp. °F	Air (%)	QC Cylinders Cast (Y/N)	QA Cylinders Cast (Y/N)

IN-PLACE DENSITY TEST REPORT

Page No. _____ of _____

Project Name: _____ Project Number: _____

Test Date: _____ Technician: _____

General Location: ☐ Building Pad ☐ Column Footing ☐ Roadway ☐ Utility Cut - Storm ☐ Utility Cut - Water main ☐ Curbs
☐ Site Fill ☐ Wall Footings ☐ Sidewalk ☐ Utility Cut - Sanitary ☐ Utility Cut - Force main ☐ Grade Beams
☐ Other: _____

Course: ☐ Embankment ☐ Backfill ☐ Structural Fill ☐ Filter Soil
☐ Subgrade ☐ Sub base ☐ Base Course

Test Depth Reference
☐ Feet NGVD / NAVD
☐ Feet Below Top of Existing Grade
☐ Feet Above Top of Pipe

Layer Thickness: _____ Moisture Range _____ Compaction Requirement: _____

Lot No.	Test Location	Test Depth	Proctor ID	Latitude	Longitude	Elevation / Depth (ft)	Moisture Count	Density Count	Wet Density (pcf)	Field Moisture (%)	Dry Density (pcf)	Compaction (%)	Results (Pass/Fail)	Original Test # (if Retest)

Moisture-Density Relationship Data:

Proctor ID	Maximum Dry Density	Optimum Moisture	Soil Description	LBR	Remarks

☐ Contractor Notified of Failing Tests ☐ Contractor Provided Copy of Density Report

Notes: _____

Standard Count : **MS** _____ **DS** _____ **Gauge Serial No.:** _____

Project:	Time on Site:
Client:	Time off Site:
Date:	☐ Cloudy ☐ Overcast ☐ Clear
Ambient Temp_____F	☐ Rain ☐ Humid ☐ Dry

CONCRETE

☐ Cancel Without Notice

☐ Concrete	No. of Sets_____	Samples per Set_____	Size_____	Test Time_____hrs
☐ Grout	No. of Sets_____	Samples per Set_____	Size_____	Test Time_____hrs
☐ Mortar	No. of Sets_____	Samples per Set_____	Size_____	Test Time_____hrs
☐ Standby	☐ Late Arrival of Concrete	☐ Late Arrival of Pump		Standby Time_____ hrs
Additional Tests	Slump_____	Temp_____	AC_____	Unit Wt._____

Notes:

DENSITIES

☐ Cancel Without Notice

No. of Tests_____	☐ Nuclear	☐ Sand Cone	☐ Other	Test Time_____hrs
Standby Time_____ hrs	☐ Area Not Ready For Testing		☐ Other	Standby Time_____hrs

Notes:

SAMPLE PICK-UP

☐ Cancel Without Notice

☐ Concrete	No. of Sets_____	☐ Proctor	No. of Samples_____	Test Time_____hrs
☐ Grout	No. of Sets_____	☐ LBR	No. of Samples_____	
☐ Mortar	No. of Sets_____	☐ Other	No. of Samples_____	
☐ Standby	☐ Area Not Ready For Sampling		☐ Other	Standby Time_____hrs

Notes:

MISCELLANEOUS

Technician:	Field Contact:
Signature:	Signature:

RADISE
Infrastructure Engineers • Software Developers

FIELD ACTIVITY REPORT

CHAIN OF CUSTODY

PROJECT NAME:
PROJECT NUMBER:

DATE: _____
SAMPLED BY: _____

RADISE No.	PROJECT SAMPLE No.	MATERIAL TYPE FILL/RIPRAP/CONCRETE	LAB REQUEST ATTACHED YES/NO	REMARKS

DROPPED OFF BY:_____

RECEIVED BY:_____

ORGANIZATION:_____

RADISE

4152 West Blue Heron Boulevard, Suite # 228 Riviera Beach, FL 33404 Ph. (561) 841-0103 Fax (561) 841-0104 URL: http:// www.radise.net

RADISE
Infrastructure Engineers • Software Developers

LABORATORY WORK ORDER (BASE & SUBBASE)

PROJECT NAME: **PROJECT NO:** **SAMPLING DATE: ……**

RADISE LAB ID: ……. PROJECT SAMPLE NO.: …… SOURCE: ……..

SAMPLING LOCATION: ……. LATITUDE: …… LONGITUDE: ……..

ASTM D 2216 As received Moisture Content	*ASTM C 117 Percent Passing No. 200*	*ASTM C 136 Grain Size Aggregate*	*AASHTO-T84 Specific Gravity & Absorption*	*ASTM D 4318 Atterberg Limits*	*ASTM D 2487 Soil Classification*	*ASTM D 2974- Organic Content*	*FM 5-514 Carbonate Content*	*FM 5-515 Limerock Bearing Ratio (LBR)*	*Lab Proctor*	
									AASHTO T224 Oversize Correction	*AASHTO T 180*

DEADLINE DATE: …… REQUESTED BY: ……DATE: ……..……..

MATERIAL TYPE: ☐ STABILIZED SUBGRADE ☐ BASE COURSE

REMARKS: ……..

Sieve Sizes ☐3” ☐2” ☐1.5” ☐1” ☐3/4” ☐3/8” ☐#4 ☐#8 ☐#10 ☐#16 ☐#20 ☐#40 ☐#50 ☐#60 ☐#100 ☐#140 ☐#200 ☐#270

4152 West Blue Heron Boulevard, Suite # 116, Riviera Beach, FL 33404 Ph. (561) 841-0103 Fax (561) 841-0104 URL: http:// www.radise.net

RADISE
Infrastructure Engineers • Software Developers

LABORATORY WORK ORDER (FILL)

PROJECT NAME: **PROJECT NO:** **SAMPLING DATE: ……**

RADISE LAB ID: ……. **PROJECT SAMPLE NO.: ……** **SOURCE: ……..**

SAMPLING LOCATION: ……. **LATITUDE: ……** **LONGITUDE: …….**

ASTM D 2216 As received Moisture Content	*ASTM D 1140 Percent Passing No. 200*	*ASTM D 422 Grain Size Aggregate*	*ASTM C 127 Specific Gravity & Absorption*	*ASTM D 4318 Atterberg Limits*	*ASTM D 2487 Soil Classification*	*ASTM D 2974 Organic Content*	*ASTM D 4253 & D 4254 Min –Max Index Density*	*Lab Proctor*		
								ASTM D4718 Oversize Correction	*ASTM D 698 (Standard)*	*ASTM D 1557 (Modified)*

DEADLINE DATE: …… **REQUESTED BY: …….DATE: ……..……..**

MATERIAL TYPE: ☐ **EMBANKMENT FILL** ☐ **STRUCTURAL BACKFILL**

REMARKS: ……..

Sieve Sizes ☐3” ☐2” ☐1.5” ☐1” ☐3/4” ☐3/8” ☐#4 ☐#8 ☐#10 ☐#16 ☐#20 ☐#40 ☐#50 ☐#60 ☐#100 ☐#140 ☐#200 ☐#270

LABORATORY WORK ORDER (RIPRAP & BEDDING STONE)

PROJECT NAME: **PROJECT NO:** **SAMPLING DATE: ……**

RADISE LAB ID: ……. PROJECT SAMPLE NO.: …… SOURCE: ……..

SAMPLING LOCATION: ……. LATITUDE: …….. LONGITUDE: ……..

ASTM C 117 Percent Passing No. 200	*ASTM C 136 Grain Size Aggregate*	*ASTM C 127 Specific Gravity*	*ASTM C 127, AASHTO-T85 Absorption*	*ASTM C 88 Soundness*	*AASHTO T 210 Durability Index*	*ASTM C 33 Aggregate Classification*	*FM 3-C 535 L.A. Abrasion*

DEADLINE DATE: …… REQUESTED BY: ……DATE: ……..……..

MATERIAL TYPE: ☐ **RIPRAP** ☐ **BEDDING STONE**

REMARKS: ……..

Sieve Sizes ☐3” ☐2” ☐1.5” ☐1” ☐3/4” ☐3/8” ☐#4 ☐#8 ☐#10 ☐#16 ☐#20 ☐#40 ☐#50 ☐#60 ☐#100 ☐#140 ☐#200 ☐#270

CHAIN OF CUSTODY

PROJECT NAME:

PROJECT NUMBER:

DATE: _____

SAMPLED BY: _____

RADISE No.	PROJECT SAMPLE No.	MATERIAL TYPE FILL/RIPRAP/CONCRETE	LAB REQUEST ATTACHED YES/NO	REMARKS

DROPPED OFF BY:_____

RECEIVED BY:_____

ORGANIZATION:_____

RADISE

4152 West Blue Heron Boulevard, Suite # 228 Riviera Beach, FL 33404 Ph. (561) 841-0103 Fax (561) 841-0104 URL: http:// www.radise.net

RADISE International

Geotechnical and Software Consultants

LABORATORY WORK ORDER

PROJECT NAME: SAMPLING DATE: _____

PROJECT NUMBER: REQUESTED BY: _____

BORING No. & LOCATION	*SAMPLE No.*	*DEPTH (FEET)*	*MOISTURE CONTENT*	*FULL SIEVE*	*-200 WASH*	*Atterberg Limits*	*ORGANIC CONTENT*

4152 West Blue Heron Boulevard, Suite # 116, Riviera Beach, FL 33404 Ph. (561) 841-0103 Fax (561) 841-0104 URL: http:// www.radise.net

Section 01 45 04

CONTRACTOR QUALITY MANAGEMENT SYSTEM

PART 1 GENERAL

1.1 QUALITY MANAGEMENT SYSTEM

Contractor shall use District furnished Quality Management System (QMS) , a web based quality management platform for use in reporting, storing, and documenting Quality Control Data generated in accordance with Section 01 45 00.00 10 QUALITY CONTROL. There shall be no separate payment for using QMS. Include all costs for performing this work in the Lump Sum pricing for the Contract. The QMS and QMS Manual can be accessed from http://www.radiselab.pro as C43 Guest. User ID's passwords and user instructions will be provided by the District.

During the development of the Contractor's Quality Control Plan identified in Section 01 45 00.00 10 QUALITY CONTROL, the District will provide support and training necessary to use the system. In addition, the District will capture and archive District's QUALITY ASSURANCE data using this platform as well and will delegate separate access rights to the Quality Assurance (QA) Team.

Quality control reports will be processed and maintained using QMS data file imports and exports. Other documents related to the Contract will be managed in the District's eBuilder contracts management system as described in other sections of these Contract Specifications.

1.1.1 QMS Forms and Signatures

QMS generates electronic forms and reports. Template forms for documenting quality data acquisition have been included for reference. The Contractor shall, during the development of the Contractor's Quality Control Plan, draft additional forms as needed for District review and acceptance. These forms will subsequently be loaded into the QMS for project use. For ease and speed of communications, both the District and the Contractor will exchange these documents in electronic format. Provide signed and dated paper copies of quality records when directed. Signed paper copies shall govern when there is a conflict with the electronic versions.

1.1.2 QMS Software

QMS is a web based application that can be run as a stand-alone system for specific project users. At Notice of Award, schedule access permissions and work with the QA Team to participate in system training, review District expectations regarding use and output as well as kick off the establishment of document control procedures for quality data in the development of the Contractor's Quality Control Plan. The District System Administrator will establish user names and passwords for intended users.

District (through its QMS administrator) will provide audit and support functions to promote proper usage and provide additional training. The Contractor is expected to enter and maintain all quality control related data and documents in the QMS and as directed by the District.

1.1.3 Database Maintenance

Establish, maintain and update quality control data for the duration of the Contract. Update QMS database each work day that quality activities are conducted. The system will monitor and notify the District administrator and the Contractor when activities are not recorded by the following day. Ensure sufficient resources are available to maintain the QMS database, keeping it current and accurate and to provide regular reporting updates as requested. The QMS shall be an integral part of the Contractor's management of Quality Control. At least weekly, generate and submit an export file to the District QA Team for review of all quality control activities.

1.1.3.1 Quality Control

QMS provides a means to track implementation of the 3-phase QC Control System, prepare quality inspection reports, identify and track deficiencies, document progress on corrective actions, and support other Contractor QC requirements. Maintain this data on a daily basis. Entered data will automatically output to the QMS generated reports, however these reports must first be drafted by the Contractor for input as templates into the system. Sample reports are provided in the appendix to this Section. The District QMS administrator will load these report templates into the system as needed and agreed by the District QA Team. These updates shall be included in the Contractor's Quality Control (CQC) Plan as the Project progresses.

a. Quality control data shall be entered into QMS. Daily Contractor Quality Control Reports shall be included and logged in eBuilder. See other sections of the Contract Specifications for these procedures.

b. Deficiency Tracking. Use QMS to track deficiencies. Deficiencies identified by the Contractor will be numerically tracked using the QC punch list. Maintain a current log of the QC punch list in the QMS database. The District will log the deficiencies it has identified using its QA punch list and will share this with the Contractor as needed. Provide a summary table as requested but at least on a weekly basis. Regularly report on correction status of both the QC and QA punch list items.

c. QC Requirements. Develop and maintain a complete list of QC testing required in the CQC Plan. Update all data on these QC requirements as work progresses, and promptly provide this information to the District via QMS.

d. Work Plan development and Three-Phase Control Meetings will be documented in eBuilder.

1.1.3.2 Import/Export of Data

QMS includes the ability to export Contractor quality reporting data to the District. District QA Team will also have access to the Contractor QC data in the system and will monitor and audit quality control activities by the Contractor. The system also has the ability to accept data imported from a mobile device (smart phone or tablet) via Wi-Fi in order to further automate the QC data collection process.

1.1.3.3 Implementation

Contractor use of the QMS as described in the preceding paragraphs is mandatory. Ensure sufficient resources are available to maintain its QMS database and to provide the District with regular database updates. Use of the QMS shall be an integral part of the Contractor's Quality Control.

1.1.3.4 File Medium

Submit, in English, all final quality control data on CD-ROM or DVD disc conforming to industry standards in the United States.

PART 2 PRODUCTS

Not used.

PART 3 EXECUTION

Not used.

-- End of Section --

SECTION 01 45 08

GEOGRAPHIC INFORMATION SYSTEM DATA REQUIREMENTS - QUALITY CONTROL AND QUALITY ASSURANCE DATA

PART 1 GENERAL

1.1 SCOPE

This Section includes requirements for the Contractor to collect, document and provide accurate and complete spatial and non-spatial data, in the formats defined herein. The work covered by this section consists of data management and data deliverables required for the construction contract.

An Information Management System for the Project will be established by the District. The system will utilize a customized version of the Corps of Engineers web based SIMDAMS platform to record, document, store and display geospatial data associated with the Project construction. Data includes Construction Quality Control data, District Quality Assurance data, and Construction Process data. The District will also establish a Sharepoint data repository site for use by the Contractor.

https://sfwmdoffice.sharepoint.com/sites/collab/c43/SitePages/Home.aspx

Permissions will be set up with the Contractor and his representatives after award.

The deliverables for this contract under this section include:

1. "Data Management Plan" submitted to the District prior to start of construction and updated at least every 3 months during the duration of the contract.

2. Provide interim deliverables as the project progresses and final datasets upon completion of the construction. The data shall be provided daily through the Sharepoint site set up for the Project.

3. Quality Control data generated on the project shall be reported on an on-going (daily) and timely basis. (Daily Quality Control Data Uploaded to Sharepoint) Data includes but is not limited to that generated by construction, boring(s), foundation preparation and mapping, or any other equipment related to construction activities, instrumentation, QC activities including reports, test results and checklists; or by photographs, video, webcam, drone surveys, or other image capturing devices. Access includes raw data and database tables which can be used with database software for analysis, summary, sorting and presentation of tabular type data.

4. Upon receipt of a data deliverable, the District will perform a data review which may include but not be limited to verification of spatial accuracy, attribute data accuracy, a check for omissions, duplications, inconsistencies, validation of geometry, and review of the topological relationships between features in the data deliverable. Any errors in spatial location (within the specified spatial accuracy) or attribute value will result in that feature being identified as being in error.

If any feature within a data deliverable does not meet a 99% confidence level, the complete data deliverable will be rejected.

5. Content of resubmitted data deliverables shall not change except to address the deficiencies identified. New features shall not be added to resubmitted data deliverables except as required to resolve deficiencies.

6. A complete borehole database in gINT (v.8 or later).

7. Participation in training sessions and manuals on the Information Management System, Tools and Software.

1.1.1 Information Management System (SIMDAMS)

The District will create and set up the information management system (SIMDAMS) for use on this project. New data collected during the construction of the project shall be provided by the Contractor to the District. This data shall conform to all data type requirements and shall include data for all fields within the SIMDAMS template for the featureclass unless granted and exception from the Engineer. Should any feature class not included in the SIMDAMS template be required or provided, the Contractor shall submit a data design including all fields and data types for those fields for approval by the Engineer before it is incorporated into the system. The database will be created such that all spatial data can be displayed and analyzed using ESRI's ArcGIS environment. The data collected shall be spatially referenced, with all relevant datums, coordinates, geographic projections and metadata provided to the District. All coordinates (State Plane) for spatially located data shall be provided in three dimensions such that the data can be used in 2D or in 3D GIS and other visualization, CAD and mapping software. Any mirror databases shall be clearly noted with the date of the export for project tracking.

1.1.2 Sharepoint Data Sharing Site

The District has set up a Sharepoint site for use by the Contractor for the duration of the project and for 12 months following contract completion. All data stored on that site shall be accessible to District during the duration of the contract. This site will be used to house all raw data, documents, drawings, photographs and videos, images, supporting documentation, PDF (portable document format), CAD drawings, borehole records, GIS support files (e.g. shapefiles or geodatabases), scans, survey records and other documents/data created on the project. All submittals shall be maintained on the site for the duration of the contract.

1.1.3 On-going Access to Data for the Duration of the Project

Contractor shall provide District access to all project data for the duration of the project and for 12 months after contract completion. Contractor shall submit, in their data management plan, an updated schedule for any data generated at the site.

New data, except for real time data noted below, shall be available to District in the spatial (GIS) environment no later than 48 hours after it is generated. All data which requires minimal processing, that is data which can be directly uploaded to the system without further processing or analysis shall be available to the District in the spatial environment no

later than 24 hours. All data shall be stored, appended and uploaded to the Sharepoint soon as possible within these 48 hour/24 hour time frames. Raw data shall be uploaded as per Section 2.2.2 Raw Data Requirements. Access to static documents (e.g. PDFs, JPG etc.) shall be accomplished through storage of these documents on the Sharepoint.

1.1.4 Data Management Plan

Contractor shall submit a comprehensive "Data Management Plan" to District for approval prior to start of construction activities. This plan shall be updated at least every three (3) months during the duration of the contract and shall include:

1. A system schema and workflow diagram describing 1) data sources, 2) storage and 3) access methods. It shall show how data from the sources flows into data storage methods (e.g. Sharepoint site), what storage methods are used and how the stored data will be accessed using system tools and components (e.g. GIS software such as ArcGIS, database tables shown in a web viewer, system reports viewable on a web site or hyperlinks to static project data such as PDF scans of handwritten documents and reports).

2. A data sources table shall describe the format of the data, the data generation method and the data transfer method to the District accessible tools and software. This shall include any database that is used to support the SIMDAMS model.

3. Input/data gathering tools for use on the project site, such as web based forms, excel spreadsheets, automated monitoring systems and other site custom data gathering devices and trackers. How these data are to be input into Sharepoint shall be explained and all input tools data structures shall be reviewed and accepted by the District before use.

4. Data quality and verification methods, including chain of custody records and metadata as well as control of raw and processed data. Input procedures for all data shall be included, data review steps shall be described and QC procedures of the data shall be detailed.

5. Backup, archiving and disaster recovery plan for data.

6. For any data not included in the SIMDAMS template, a data structure appendix that lists all tables, feature classes and fields within each feature class or table. Each field shall have the data type of the data used within that field specified and any data entry restrictions shall be noted. This appendix shall be updated as new feature classes or tables are added, but in any case it shall be reviewed and updated as necessary no less than every three months.

1.1.5 Boring Log Database in gINT (v8 or later)

All boring log data, or a portion of this boring log data used to show stratigraphic features of interest on a boring log core stick used in the GIS (e.g. strata, fractures, non-rock intervals, etc.) may be included in the Sharepoint or may be stored only in the gINT database provided that these logs are visualized in both the simplified and full scale GIS program. Database template and Boring Log printing templates in gINT shall be provided to the Contractor by District. Data structure used for data entry

shall be part of the Data Management Plan and shall be reviewed and approved by the District before use. Any handwritten boring logs generated at the site at the time of drilling shall be scanned, put into PDF format and placed on the Sharepoint site. Final typed boring logs shall be created from this boring log database in PDF format and shall be posted as final boring logs on the Sharepoint. Electronic logging of drilling will be allowed through direct entry into the Sharepoint /Boring Log database or via a data gathering device such that the data can be uploaded to the Sharepoint/Boring log database provided that record tracking as specified is followed and Contractor submits backup methodology to protect against data loss. Contractor shall be responsible for ensuring data loss of drilling data does not occur.

1.2 REFERENCES

Applicable Sections of the US Army Corps of Engineers:

ER 1110-1-8156 (2005) POLICIES, GUIDANCE AND REQUIREMENTS FOR GEOSPATIAL DATA AND SYSTEMS

EM 1110-1-2909 (2005) GEOSPATIAL DATA AND SYSTEMS

EM 1110-1-1804 (2001) ENGINEERING AND DESIGN GEOTECHNICAL INVESTIGATIONS

Federal Geographic Data Committee

FGDC-STD-001-1998 (1998) Content Standard for Digital Geospatial Metadata

International Organization for Standardization

ISO 191xx Geospatial Metadata Series:

ISO 19110: Geographic information Methodology for Feature Cataloging

ISO 19115:2003 Geographic information Metadata (Cor 1:2006)

ISO 19115 1: Geographic information - Metadata - Part 1

ISO 19115 2: Geographic information - Metadata - Part 2

ISO 19119: Geographic information - Services - Amendment

ISO 19139: Geographic information -- Metadata -- XML schema implementation

Camera & Imaging Products Association

CIPA DC-008-Translation-2010: Exchangeable image file format for digital still cameras: Exif Version 2.3 (JIETA CP-3451B)

1.3 SUBMITTALS

Submit the following in accordance with Section 01 33 00 SUBMITTAL PROCEDURES:

SD-01 Preconstruction Submittals

Data Management Plan - including data structure appendix for any new data not included in the SIMDAMS template.

SD-05 Design Data

Daily Quality Control Data Uploaded to Sharepoint

Raw Data Files

1.4 SUBMITTAL REQUIREMENTS

Data Management Plan: Within 30 days after Notice to Proceed; contractor shall submit a comprehensive plan for management of all the various data collected throughout this contract. Plan shall include all sections and information detailed herein.

1.5 QUALITY CONTROL

Contractor shall define quality control and quality procedures to be employed in the development and review of project data. The data provided by the Contractor is expected to be error free.

PART 2 PRODUCTS

Data, Reports And Drawings:

2.1 DATA OWNERSHIP

A. For each data deliverable, all the data for that deliverable will be provided as a single Zip file and submitted to the Sharepoint site established by the District for this project.

B. Each Zip file will contain a single data element as described in the following detail and will be compatible with most recent production release (not beta-release) of designated software. In addition, each Zip file will contain a folder named "Photos" and it will contain all digital photos for the deliverable as described in this document.

C. To facilitate logging and tracking of deliverable review, a text file will be provided in the Zip file. The contents of this text file will include the following:

1. Original Delivery Date: <date when version 1 of this deliverable was submitted>

2. Deliverable Title: <contractor specified title that remains constant for all revisions>

3. Deliverable Number: <Sequential delivery number>.<Revision number>

4. Contact Person: <Name, phone, e-mail>

2.2 DATA OWNERSHIP

All data submitted during this project becomes the property of the District upon initial submission.

The Contractor shall not distribute any of the project data, or any draft data that contributed to the final project datasets, without written approval from the District.

2.3 DATA INTEGRITY

Contractor is required to maintain integrity of data such that records are accurate, internally consistent, that all data and records reflect the quality of the data gathered on the site and that all data is preserved and archived for future use.

2.3.1 Record Tracking Requirements

Each record entered into the Sharepoint site shall be stamped such that the source, status, ownership and degree of validation and verification are known for each data record. This shall include:

1. Source of the record (e.g. laboratory information, sample ID, instrument name, name and affiliation of observer/tester/data gatherer).

2. Organization generating the data (e.g. District, Contractor, Contractor Laboratory).

3. Date and Time where data was created (e.g. when sample was taken, or when observation was made).

4. Date and Time where data was entered into the system and name of individual entering the data.

5. Date/time where any data in the system was modified, name of the manager who made the edit and reasons for the edit (e.g. where laboratory testing data is appended to a sample record).

6. Date/time where data in the system received QC certification.

7. Name of QC certifier.

8. Location of data in three dimensions, relatable to X, Y and Z coordinates where Z is elevation for all data that can be spatially located (e.g. borehole locations, cutoff wall elements, or concrete samples taken).

9. Reference to any digital or paper based chain of custody records associated with the data.

10. Data captured and stored in QMS will be uploaded to SIMDAMS by the District.

2.3.2 Raw Data Requirements

Contractor shall submit raw data files for any data gathering system used on the project. These files, if not readable directly as a tab delimited ASCII file, as a CSV file or readable by MS Excel shall also be provided in a format readable by the current version (at the time of the contract) of MS Excel. To the extent possible, contractor shall use data gathering systems that will generate non-proprietary or industry standard format data files readable in AutoCADD, ASCII, CSV or with MS Excel. All data columns shall be labeled and metadata provided to District including units, any formulae used to calculate the data or any criteria used to generate the data. Metadata for these files shall be detailed in the Data Management Plan or in addenda to that plan.

The Contractor shall be responsible for submitting all raw data within 12 hours of data collection to the District via the Sharepoint site. If conversion of this raw data is necessary in order for it to be readable by MS Excel, contractor shall submit this converted file within 24 hours of data collection. Where these files as generated are not directly readable by Excel, contractor shall also submit raw data to the District via MS Excel with column headings and metadata provided.

Where data gathering equipment on site does not provide sufficient data columns or data entry fields to track data as detailed in section 2.2.1 Record Tracking Requirements, Contractor shall submit Raw Data as generated within 12 hours and shall submit to District within 48 hours the Appended Raw Data files in Excel including the required tracking data. For all files with the same structure, metadata may be provided for the set of data documents and is not required for every single file.

2.3.3 Backups, Archiving and Disaster Recovery

Contractor is responsible for all data records such that any chance for data loss is minimized. Contractor shall address backups, archiving and disaster recovery plans in the Data Management Plan submittal. Contractor shall be responsible for re-generating lost data. Any data which is re-generated from a non-primary source shall be clearly noted in the record. In no case shall data be stored such that it remains without a backup for any more than 24 hours. Should a data loss occur, even if it is within this 24 hour window, Contractor is responsible for all steps necessary to recover from this data loss and shall receive no additional payment for these data recovery efforts.

2.4 SPATIAL DATA PROJECTION AND DATUMS

All GIS spatial data shall be projected using State Plane. The Horizontal Datum used shall be NAD83. Data gathered on the project that can be located using coordinates shall have coordinates with this projection and datums.

2.5 BORING LOGS

Contractor shall set up, maintain and update a Borehole Database in gINT (v.8 or later) for all drill holes on the project, including but not limited to exploratory drilling, and verification holes etc. Strata, including formation names, soil type, materials such as boulders or other important geological features shall be exportable from this borehole database.

PART 3 EXECUTION

3.1 DELIVERABLE CONTENT

1. Data consists of two types, spatial and non-spatial. The two will be linked using a unique ID associated with each spatial feature. Ultimately, the US Army Corps of Engineers (COE) SIMDAMS model will be used to record, store and display all construction data developed for this project.

2. A unique ID will be created for each feature based on naming conventions provided by the District.

3. Spatial Data

   a. All spatial features will be delivered as CAD data compatible with AutoCAD software. All gINT boring logs and/or piezometer and monitoring well details shall include coordinate and elevation data that are geo-referenced consistent with the project datum and coordinate system. These data will have coordinates that match the actual, as-built conditions. The distance between two points on the ground shall equal the distance shown in the drawing or feature class. All subsurface (underground) features shall be depicted as if they were on the surface.

      i. Data shall be provided in State Plane Florida East coordinate system following these requirements:

      ii. Coordinates shall be recorded in US feet.

      iii. Horizontal coordinates shall be based on the North American Datum of 1983 (NAD83) and the Geographic Reference System (GRS 80) ellipsoid.

      iv. Vertical coordinates shall be based on NAVD88

   b. Spatial coordinates shall be accurate to within 0.1 foot horizontally and 0.1 foot vertically, unless otherwise specified.

4. General AutoCAD drawing standards

   a. CAD data will be compatible with Autodesk AutoCAD Civil 3D 2018 version or later. This CAD data shall be compatible with importing into ArcGIS 10.3 or later with the ability to bring along metadata about CAD features into the ArcGIS environment.

   b. Point features (includes AutoCAD POINTS and BLOCKS) will be collected with X, Y, Z values (Z representing the surface elevation). BLOCKS may have additional attributes.

   c. Linear features (includes plines and 3Dplines) will be drawn without using curves or splines. Most linear features will be collected with 3Dplines with the Z value representing actual surface elevations or proposed/future elevations. Plines will generally be used only for contours; for contours, the elevation value for each pline will be input.

d. Area features will be drawn as closed 3Dplines without zero length segments (for example, draw a simple rectangle from point 1 to point 2 to point 3 to point 4 and close, not 1>2>3>4>1>close).

e. Adjacent features that share their same locations must have the same X, Y, Z coordinates for all shared vertices (edge matching of all X, Y, Z vertices).

f. All features except contours will have an associated unique ID. Point BLOCKS will have an ID attribute. IDs will be provided as object data. When object data is not available the following alternate procedure will be observed. A layer will be created to hold IDs for polygons and linear features. The ID text for all linear and polygon features will be inserted at the feature start point as text.

5. Below are the list of AutoCAD features:

Item	AutoCAD Entity	Layer	Notes	GIS Reference
Site Prep				
Pipe removal	3Dpline	PIPE-REMOVAL		PIPE_REMOVAL
Ditch	3Dpline	DITCH	Collect ditch flow line	DITCH
Borehole	Point Block	BOREHOLE	Block name: Borehole Attribute: Diameter (inches) Attribute: BottomEL (bottom of borehole) Attribute: ClayEl (top of clay elevation)	BOREHOLE
Vegetative Stripping Locations	Closed 3Dpline	STRIPPING_AREA		STRIPPING_AREA

Item	AutoCAD Entity	Layer	Notes	GIS Reference
Soil Bentonite Wall				
Soil bentonite wall top	3Dpline	SB-WALL-TOP		SB_WALL
Soil bentonite wall bottom	3Dpline	SB-WALL-BOTTOM		SB_WALL
Workpad	Closed 3Dpline	WRK-PAD		WORKPAD
Wallcap	3Dpline	WALL-CAP		WALL_CAP
Top of clay (contour)	Pline	SB-WALL-TOC	2D pline with elevation	TOP_OF_CLAY

Item	AutoCAD Entity	Layer	Notes	GIS Reference
Embankment				
Drain Pipe	3Dpline	DRAIN-PIPE		DRAIN_PIPE
Blanket drain	Closed 3Dpline	BL-DRAIN	3D pline drawn at base of drain	BLANKET_DRAIN
Chimney drain	Closed 3Dpline	CH-DRAIN	3D pline drawn at base of drain	CHIMNEY_DRAIN
Select fill placement	Closed 3Dpline	SEL-FILL-PL		SELECT_FILL
Embankment fill placement	Closed 3Dpline	EM-FILL-PL		EMBANKMENT_FILL
Borrow stock pile	Closed 3Dpline	BR-STOCK		BORROW
Import stock pile	Closed 3Dpline	IM-STOCK		IMPORT

Soil Cement Slope Protection				
Soil cement placement	Closed 3Dpline	SOIL-CMT_PL		SOIL_CEMENT_PLACEMENT

Pressure Relief System				
Pressure Relief System	Point Block	SAND-COLUMN	Block name: SAND-COLUMN Attribute: Diameter Attribute: Center-Coordinates ColumnBottomEl	PRESSURE RELIEF SYSTEM

Item	AutoCAD Entity	Layer	Notes	GIS Reference
Instrumentation				
Permanent vibrating wire piezometer	Point Block	PERM-VWP-INST	Block name: PERM-VWP-INST Attribute: ID Attribute: Description Attribute: INSTALLATION DATE	PERM_VIBRATING_WIRE_ PIEZOMETER
Temporary vibrating wire piezometer	Point Block	TEMP-VWP-INST	Block name: TEMP-VWP-INST Attribute: ID Attribute: Description Attribute:	TEMP_VIBRATING_WIRE_ PIEZOMETER

Item	AutoCAD Entity	Layer	Notes	GIS Reference
			INSTALLATION DATE	
Monitoring Wells	Point Block	MON-WELL	Block name: MON-WELL Attribute: ID Attribute: Description Attribute: INSTALLATION DATE	MON_WELL
Temporary settlement plate	Point Block	TEMP-STPLT-INST	Block name: TEMP-STPLT-INST Attribute: ID Attribute: Description Attribute: INSTALLATION DATE	TEMP_SETTLEMENT_PLATE
Survey monument	Point Block	MONUMENT	Block name: MONUMENT Attribute: ID Attribute: Description Attribute: INSTALLATION DATE	SURVEY_MONUMENT

Geotechnical Tests				
In place density test	Point Block	IPD-TEST	Block name: IPD-Test Attribute: Density Attribute: TBD	IPD_TEST
Concrete test	Point Block	CONC- -TEST	Block name: CONC- TEST Attribute: TBD Attribute: TBD	CONC_ TEST

6. Non-spatial Data

   a. All non-spatial data will be associated with spatial locations using the unique ID associated with the spatial element and described in the previous section of this document.

7. Digital Photographs

   a. Contractor shall provide at least one digital photo showing the physical extent of each feature, where possible within reasonable effort. The digital photo will be provided at the same time as the initial data delivery of a feature.

b. The digital photos will be of sufficient resolution, clarity, brightness and picture quality such that it is easy to discern the feature.

c. The digital photos will be provided in JPEG format and will be named such that the filename of each photograph is associated with the spatial feature ID. Photographs shall have spatial location data embedded in the format, i.e. GPS coordinates.

8. Boring Logs in gINT (v8 or later)

3.2 METADATA

Each feature class in a submittal will include complete metadata that follows the *Content Standard for Digital Geospatial Metadata (CSDGM), Vers.2 (FGDC-STD-001-1998)*. Metadata will be validated as part of Contractor's Quality Control procedure.

-- End of Section --

SECTION 01 51 05

TEMPORARY UTILITIES AND FACILITIES

PART 1 GENERAL

1.1 SUMMARY

Summary of Work: This Section includes requirements of a temporary nature not normally incorporated into final Work. It includes the following:

1. Utility services
2. Construction and support facilities
3. Construction aids
4. Fire protection

1.2 RELATED WORK SPECIFIED ELSEWHERE

There are other specification sections that relate to this section that are not necessarily cited herein.

1.3 REFERENCES

The publications listed below from a part of this specification to the extent referenced. The publications are referred to within the text by the basic designation only.

AMERICAN NATIONAL STANDARDS INSTITUTE (ANSI):

ANSI A10	Safety Requirements for Construction and Demolition

NATIONAL ELECTRICAL CONTRACTORS ASSOCIATION (NECA)

NECA	Electrical Design Library - Temporary Electrical Facilities

NATIONAL FIRE PROTECTION ASSOCIATION (NFPA):

NFPA 10	(2013) Standard for Portable Fire Extinguishers
NFPA 70	(2017; ERTA 1-2 2017; TIA 17-1; TIA 17-2) National Electrical Code
NFPA 241	(2013; Errata 2015) Standard for Safeguarding Construction, Alteration, and Demolition Operations

NATIONAL ELECTRICAL MANUFACTURERS ASSOCIATION (NEMA)

UNDERWRITERS LABORATORIES (UL)

1.4 SUBMITTALS

Submit the following in accordance with Section 01 33 00 SUBMITTAL PROCEDURES:

SD-01 Preconstruction Submittals

Site Plan

1.5 SITE PLAN

Prior to the start of work, submit a site plan indicating the temporary facilities including:

a) QA Laboratory Field Office Trailer

b) Guard House, gate and guard parking, visitor turn around layout

c) Temporary Utility Connections

d) Parking

e) Include and label the existing District Compound including but not limited to the trailers, decking, fencing, parking, utilities on the site plan as background.

1.6 QUALITY REQUIREMENTS

1.6.1 Regulations

Comply with industry standards and applicable laws and regulations of authorities having jurisdiction, including but not limited to:

1. Hendry County
2. Florida Department of Transportation (FDOT)
3. Building Code requirements
4. Utility company regulations
5. Police, Fire Department, and rescue squad rules
6. Environmental protection regulations

1.6.2 Standards

1. Comply with NFPA 10 and NFPA 241, and ANSI A10 Series standards "Temporary Electrical Facilities."
2. Comply with NEMA, NECA, and UL standards and regulations for temporary electric service. Install service in compliance with NFPA 70.

1.6.3 Inspections

Arrange for authorities having jurisdiction to inspect and test each temporary utility before use. Obtain required certifications and permits.

PART 2 PRODUCTS

2.1 MATERIALS AND EQUIPMENT

2.1.1 Provide new materials and equipment

If acceptable to the District, undamaged previously used materials and equipment in serviceable condition may be used. Provide materials and equipment suitable for the use intended, of capacity for required usage, and meeting applicable codes and standards.

2.1.2 Water

Connect to existing water line that was constructed as part of an earlier bid package.

2.1.3 Water Hoses

Provide 3/4-inch (19-mm), heavy-duty, abrasion-resistant, flexible rubber hoses 100 feet (30 m) long, with pressure rating greater than the maximum pressure of the water distribution system. Provide adjustable shutoff nozzles at hose discharge.

2.1.4 Electrical Outlets

Provide properly configured, NEMA-polarized outlets to prevent insertion of 110- to 120V plugs into higher voltage outlets. Provide receptacle outlets equipped with ground-fault circuit interrupters, reset button, and pilot light for connection of power tools and equipment.

2.1.5 Electrical Power Cords

Provide grounded extension cords. Use hard-service cords where exposed to abrasion and traffic. Provide waterproof connectors to connect separate lengths of electric cords if single lengths will not reach areas where construction activities are in progress. Do not exceed safe length-voltage ratio.

2.1.6 Lamps and Light Fixtures

Provide general service incandescent lamps of wattage required for adequate illumination. Provide guard cages or tempered-glass enclosures where exposed to breakage. Provide exterior fixtures where exposed to moisture.

2.1.7 Fire Extinguishers

Provide four (4) hand-carried, portable, UL-rated, Class A fire extinguishers for temporary offices and similar spaces. In other locations, provide four (4) hand-carried, portable, UL-rated, Class ABC, dry-chemical extinguishers or a combination of extinguishers of NFPA-recommended classes for the exposures. Comply with NFPA 10 and NFPA 241 for classification,

extinguishing agent, and size required by location and class of fire exposure.

PART 3 EXECUTION

3.1 TEMPORARY UTILITIES

3.1.1 General

1. It is anticipated that there will be multiple separate construction contracts under construction at this site at the same time. The District's construction compound is separate from the Contractor's construction compound.

2. The initial construction package was responsible for installing and maintaining electricity, telephone, a water well and distribution system and a sanitary sewer septic system to the District's construction compound. Water and electric services have been extended and stub outs placed in the Vicinity of the planned location of the QA Laboratory field office trailer.

3. With the Notice to Proceed the Contractor shall become responsible for all costs of maintaining all of the District's existing field office trailers, located at the project site, ~~(existing and new)~~ ~~and the existing field laboratory~~ for the life of this contract. With the addition of ~~the~~ one (1) new QA Laboratory field office trailer ~~in~~ as part of this contract, as required in section 01 52 13, ~~-~~there will be a total of five (5) field office trailers~~s~~, all of similar size~~, and one (field) QA laboratory trailer similar in size to the field office trailers~~. The District is responsible for the cleaning ~~the field offices~~, garbage pick-ups, and maintenance of utilities for these field office trailers.

4. Engage the appropriate local utility company to extend temporary electric and phone service to the Project area from nearby existing utilities. Where utility company provides only part of the service, provide the remainder with matching, compatible materials and equipment. Comply with utility company recommendations.

5. Provide adequate utility capacity at each stage of construction. Prior to availability of temporary utilities at the site, or in remote areas without services, provide trucked-in services as required for start-up and construction operations.

6. Furnish, install and maintain temporary utilities required for adequate construction, safety and security. Modify, relocate and extend systems as Work progresses. Repair damage caused by installation or use of temporary facilities. Grade the areas of Site affected by temporary installations to required elevations and grades and clean the area. Remove on completion of Work or until service or facilities are no longer needed or are replaced by authorized use of completed permanent facilities.

7. The types of temporary construction utilities and facilities required include, but are not limited to, potable water, wastewater, drainage, dewatering equipment, enclosure of Work, ventilation, electrical power, lighting, hoisting facilities, stairs, ladders, and roads.

8. Inspect and test each service before placing temporary utilities in use. Arrange for required inspections and tests by governing authorities, and obtain required certifications and permits for use.

9. Materials used for temporary service shall not be used in the permanent system unless so specified or acceptable to the District.

3.2 TEMPORARY ELECTRICITY AND LIGHTING

3.2.1 New Service

1. Connect the QA Laboratory field office trailer to the electric stub out provided by others. Provide a separate meter to the Contractor's construction trailer.

2. Provide electric service to the temporary guard house adequate to support the lighting and air conditioning.

3. Arrange with utility company to extend existing electric service to the Project Work Site. Connect temporary service in a manner directed by utility company officials. Provide separate meter for metering of power used by all entities authorized to be at or perform Work at the Project Work Site.

4. The electric service shall be of sufficient capacity and characteristics for the various construction tools, machinery, lights, heating and air conditioning, pumps, and other tools required by Contractor and his Subcontractors. In areas of the Project where permanent or temporary power service from the local utility is not available, the Contractor shall supply and maintain engine-driven, power-generator sets.

5. Provide weatherproof, grounded, power distribution system sufficient to accommodate construction operations requiring power, use of power tools, electrical heating and lighting. Provide overload protection. Supply power for electric welding, if any, from engine-driven, power-generator sets.

6. Provide adequate artificial lighting for all areas of Work when natural light is not adequate for Work.

7. Sufficient light shall be provided for general construction areas, with additional sufficient lighting for specific tasks and to meet safety requirements.

3.2.2 Use of Permanent System

1. Prior to use of permanent system to be installed by the power company for construction purposes, obtain written permission of the District.

2. Maintain permanent system as specified for temporary facilities.

3.2.3 Costs of Installation and Operation

1. Pay fees and charges for permits and applications.

2. Pay costs of installation, maintenance, removal of temporary services, and restoration of any permanent facilities used.

3. Pay costs of electrical power used (if applicable).

4. Pay costs of furnishing, operating, and maintaining engine-driven power-generator sets, where applicable.

3.3 TEMPORARY HEAT AND VENTILATION

3.3.1 General

1. Provide temporary heat, ventilation and cooling as required to maintain adequate environmental conditions in temporary office trailers, the temporary guard house and storage sheds and to facilitate progress of the Work, to meet specified minimum conditions for the installation of materials, and to protect materials and finishes from damage. Protect from adverse effects of low temperatures or high humidity, and to prevent hazardous accumulations of dust, fumes, vapors, or gases.

3.3.2 Costs of Installation and Operation

1. Pay fees and charges for applications, permits, and inspections.

2. Pay costs of installation, operation, maintenance, removal of equipment, and restoration of existing or permanent facilities if used.

3. Pay cost of power and fuel used.

3.4 TEMPORARY TELEPHONE SERVICE

3.4.1 General

Contractor shall arrange with local cellular/mobile telephone service company to provide mobile telephone service for use by Contractor and so Contractor can be reached throughout the entire Project area during normal working hours. This will likely require the use of mobile "hotspots".

3.4.2 Costs of Installation and Operation

1. Pay all costs for installation and removal.

2. The Contractor shall be responsible for all costs associated with providing and maintaining telephone service to the Contractor's field office.

3.5 TEMPORARY WATER FACILITIES

3.5.1 General

The water system in the District's construction compound will not be available to the Contractor. The Contractor is responsible for arranging for water usage in the Contractor's construction compound. Connect the QA Laboratory field office trailer to the water stub out provided by others.

3.6 TEMPORARY SANITARY FACILITIES

3.6.1 Contractor-Furnished Facilities

1. Furnish, install and maintain temporary sanitary facilities for use through construction period. Remove on completion of Work. A holding tank that is maintained is acceptable.

2. A portable restroom facility at the temporary guard house is acceptable.

3. Provide for all construction workers under this Contract and representatives at the Site.

4. Toilet facilities shall be of the chemical-aerated recirculation or combustion type, properly vented and fully enclosed with a glass-fiber-reinforced polyester shell or similar nonabsorbent material.

3.6.2 Costs of Installation and Operation

1. Pay fees and charges for permits and applications.

2. The Contractor shall be responsible for all costs associated with providing and maintaining sanitary sewer service to the Contractor's field office(s).

3.6.3 QA Laboratory Field Office Trailer Sanitary Sewer

1. The Contractor shall furnish all equipment, plant, material, labor, supervision and coordination for construction of a septic tank and drain field wastewater system for use by the QA Laboratory field office trailer. The Work consists of the complete and functional installation of a wastewater system including the connection to the QA Laboratory field office trailer and the collection system connected to the septic tank.

2. The Contractor shall coordinate with and submit for a permit from Hendry County Department of Health.

3. The Contractor shall pay the fee(s) required for Hendry County to design, permit and inspect the septic tank and drain field wastewater system. The fee is estimated to be $500 for a system to serve up to 40 people, however it is the Contractor's responsibility to determine the cost.

4. The Contractor is responsible for the installation, operation and maintenance cost of the system thru completion of the project.

3.7 TEMPORARY CONSTRUCTION AIDS

3.7.1 General

1. Provide construction aids and equipment required by personnel, available for District observer's use, and to facilitate the execution of the Work; scaffolds, staging, ladders, stairs, ramps, runways, platforms, railings, hoists, cranes, chutes, and other such facilities and equipment.

2. Materials may be new or used, must be suitable for the intended purpose and meet the requirements of applicable codes, regulations and standards.

3. When platform stair framing is in place, provide temporary treads, platforms, and railings for use by construction personnel.

4. The Contractor shall be prepared to install temporary drainage culverts to direct surface storm water flows around and away from the project. This will also involve filling existing and creating new drainage ditches.

3.7.2 Fuel Storage

1. The Contractor shall provide a fuel storage area in the Contractor laydown area. Under no circumstances shall fuel oil storage be located within the footprint of the reservoir. The fuel storage shall meet all the requirements related to fuel oil storage noted in Section 01 35 00 ENVIRONMENTAL PROTECTION.

3.8 INSTALLATION AND REMOVAL

3.8.1 Relocation

Relocate construction aids as required by progress of construction, by storage or Work requirements, and to accommodate requirements of District and other Contractors at the Site.

3.8.2 Removal

Remove temporary materials, equipment and services when construction needs can be met and allowed by use of permanent construction, or at completion of the Project.

All utility services associated with the District Compound shall remain in place.

3.8.3 Repair

Clean and repair damage caused by installation or by use of temporary facilities.

1. Remove foundations and underground installations for construction aids.

2. Grade the areas of the Site affected by temporary installations to required elevations and clean the area.

-- End of Section --

SECTION 01 52 13

FIELD OFFICES AND SHEDS

PART 1 GENERAL

1.1 SUMMARY

Summary of Work: This Section includes requirements for temporary field offices and other structures for office and storage space required by Contractor and the District. The District requirements for this contract include Contractor provided and installed QA Laboratory field office trailer to support an existing QA Laboratory.

1.2 RELATED WORK SPECIFIED ELSEWHERE

1. There are other specification sections that relate to this section that are not necessarily cited herein.

1.3 REFERENCES

The publications listed below form a part of this specification to the extent referenced. The publications are referred to within the text by the basic designation only.

AMERICAN NATIONAL STANDARDS INSTITUTE/INTERNATIONAL SAFETY EQUIPMENT ASSOCIATION (ANSI/ISEA)

ANSI/ISEA Z308.1 (2015) Minimum Requirements for Workplace First Aid Kits

1.4 SUBMITTALS

Submit the following in accordance with Section 01 33 00 SUBMITTAL PROCEDURES:

SD-01 Preconstruction Submittals

Site Plan

Boat, Motor, Trailer and Accessories

RTV

SD-02 Shop Drawings

QA Laboratory Field Office Trailer

Site Grounding System

SD-03 Product Data

Portable Air Conditioner

Formatted: Indent: First line: 0.06"

SD-07 Certificates

Certificate of Occupancy

SD-11 Closeout Submittals

As-Built Survey

1.5 SUBMITTAL REQUIREMENTS

a. Submit for all the disciplines required for the QA Laboratory field office trailer prior to acquisition and installation Work.

b. Submit a Site Plan indicating:

1. QA Laboratory Field Office Trailer with access stairs and ramps.

2. Chain link fence and gate relocation, if required.

3. Provide details for installing and connecting the IT conduits from the previously installed District office trailer to the new QA Laboratory field office trailer.

4. Parking for the District QA Laboratory field office.

5. Contractor's compound including field office trailers, utilities, parking, and lay down areas.

6. Traffic Control.

7. A detailed materials list prior for acquisition.

c. Submit shop drawings for all materials, design, and layout of the QA Laboratory field office trailer including the ADA ramp(s) and landings at the trailer access points showing the construction compound site utilities, the parking and the site grounding system to the District for review and approval. Include drawings of the stairs ~~and~~, landings and ramps for the QA Laboratory field office trailer.

d. Submit specifications for boat, motor, trailer and accessories.

e. Submit specification for the RTV.

f. Submit permit application(s) to Hendry County including but not limited to building, sanitary sewer/waste water, and water.

g. Submit the product data for the portable air conditioner for District approval.

Commented [AJ1]: Submittal tag

~~g~~h. Submit Certificate of Occupancy (CO) for the new QA Laboratory field office trailer when completed.

1.6 QUALITY REQUIREMENTS

1.6.1 Regulations

Comply with industry standards and applicable laws and regulations of authorities having jurisdiction, including but not limited to:

1. Hendry County.

2. Florida Department of Transportation (FDOT).

3. Building Code requirements.

4. Utility company regulations.

5. Police, Fire Department, and rescue squad rules.

6. Environmental protection regulations.

1.7 QA LABORATORY FIELD OFFICE TRAILER

Prior to initial mobilization and payment, the QA Laboratory field office trailer shall be installed, complete, including the ADA ramps, access point landings, the utilities and utility connections, furnishings, and safety equipment, within 60 days of the Notice to Proceed (NTP).

1.8 WARRANTY

The Contractor shall provide and install the QA Laboratory field office trailer for the District's use for the duration of the project. The Contractor shall make repairs as required to maintain the office trailer and all the components including but not limited to the structure, the stairs, the HVAC, the electrical and plumbing in working condition for the duration of the project. Any warrantees required by the Contractor related to the field office trailer and the supporting appurtenances shall be the Contractor's responsibility.

PART 2 PRODUCTS

2.1 FIELD OFFICES

2.1.1 General

1. The remaining existing farming facilities at the site shall not be used for field offices.

2. Permanent facilities, when substantially completed, shall not be used for field offices or for storage.

3. Provide trailer, constructed with the floor raised aboveground with steps and landings as indicated. Include trailer skirting all around the trailer to match the color of the trailer. Include gutter, downspouts, and splash blocks at appropriate locations around the trailer.

4. Contractor shall obtain any required building permits for installation of temporary field office trailers and sheds.

5. The Certificates(s) of Occupancy (CO) will be issued by Hendry County.

6. Buildings shall be structurally sound, secure, and weather tight.

2.1.2 Contractor's Office

1. Provide a field office for Contractor's superintendent at the construction site.

2. Field office trailer shall be of size required for general use, with lights, heat and air conditioning, furnishings, telephone service, and other necessary facilities and utilities required by Contractors operations.

2.1.3 QA Laboratory Field Office Trailer

1. The Contractor shall provide, install, and maintain the QA Laboratory field office trailer with equipment, materials and appurtenances for the District's use as shown in the Contract~~or~~ Documents with additional parking as required. Construct a set of treated timber stairs and landing for one access point to the QA Laboratory. Provide ADA ramp(s) meeting current ADA code requirements to provide access to one of the QA Laboratory field office trailer access points. The trailer shall be fabricated and positioned such that ~~the tongue (towing end of trailer) is located at the south end of the trailer and the~~ access doors point~~s~~ to the east when ~~it~~ the trailer is set in position in the compound. See drawings C01110 and C01111 for the trailer orientation.

2. Provide cubicle spaces, storage room, open areas, and printer/plotter production space, as shown in the Drawings ready for occupancy, including 24 hour / 7 days per week power service.

3. Each cubicle space, conference room, storage room, and space for copier/printer/fax/scanner/plotter requires Air Conditioning/Heating/Ventilation/Dehumidification/Lighting/Electrical Service.

4. Section 01 51 05 TEMPORARY UTILITIES AND FACILITIES ~~P~~requires four (4) hand-carried, portable ~~rovide two (2) appropriate portable type~~ fire extinguishers. Provide two (2) of them in the new QA Laboratory field office trailer. Provide two (2) of them in the existing QA laboratory.

5. Provide one (1) Automated External Defibrillator (AED) in the new QA Laboratory field office trailer as directed by the District.

6. Provide and install one (1) Class B First Aid Kit meeting the requirements of ANSI/ISEA Z308.1 and one (1) first aid cabinet if not a part of the kit. Install the kit in the first air cabinet in the QA Laboratory field office trailer.

7. All QA Laboratory field office trailer furnishings provided by the Contractor shall become the property of the Contractor at the completion of the project. The Contractor shall remove the QA Laboratory field office from the project upon completion and acceptance of the work.

8. Install cubicle spaces ready for occupancy within sixty (60) days of the Notice to Proceed.

9. Meet the following minimum space/furnishing requirements:

a. 1,344 square foot minimum using 24-foot by 56-foot trailers.

b. Secure entrance doors - minimum six (6) sets of keys for each entrance door.

c. Windows with operable sash, insect screens and mini blinds.

d. Lockable storage closet with no window, with an individually keyed door with six (6) sets of keys, air conditioned, and with one open 5-shelf storage cabinet.

e. Resilient floor covering.

10. Provide two (2) offices and each office shall include the following:

a. Configuration as shown on Contract Drawings.

b. Individually keyed internal office doors with two (2) sets of keys per door.

c. At least one (1) window per office space, each window to have operable sash, insect screens, and mini-blinds.

d. Each office shall be as shown on the Contract Drawings and shall have the following:

1) One (1) standard size desk with five drawers.

2) One (1) swivel desk chair with arms and with fabric seat and back.

3) One (1) protective floor mat for the desk chair.

~~3~~4) Two (2) stackable guest chairs with fabric seat and back.

~~4~~5) Two (2) four-drawer filing cabinet (capable of storing a minimum of letter size documents).

~~5~~6) One (1) five-shelf bookcase.

~~6~~7) One (1) 24 inch x 36 inch white board with set of dry erase markers and eraser.

~~7~~8) One (1) wastebasket per office.

~~8~~9) One (1) desk lamp.

11. Provide four (4) cubicles, each cubicle shall include the following:

a. Configuration as shown on Contract Drawings.

b. Cubicle wall panels shall have fabric on both sides, have a height of 5 feet and the ability to route electrical and telecommunications wiring within the walls.

c. Cubicle wall panels shall be appropriately secured to the floor with the ability to be moved, re-arranged, and re-installed as needed.

d. Cubicle dimensions shall be a minimum of 9 foot x 8 foot and shall have the following:

1) Desk top on two sides of the cubicle walls.

2) One (1) swivel desk chair with arms and with fabric seat and back.

3) ~~Six~~ One (~~6~~1) protective floor mat~~s~~ for the ~~cubicle~~ desk chair~~s~~.

4) Two (2) mobile drawer pedestals that can fit under the main desk, includes two (2) box drawers and a letter/legal file drawer, lower two drawers to be lockable.

5) One (1) 4 drawer vertical letter lockable metal file cabinet.

6) One (1) 24 inch x 36 inch white board with set of dry erase markers and eraser.

7) One (1) wastebasket.

8) One (1) desk lamp.

12. Provide one (1) storage closet. Use for storage and IT services.

13. Provide two (2) restrooms (Men and Women) both of which are to be ADA compliant. Both restrooms shall be connected to the well and the septic system. Each restroom shall include the following:

a. One (1) wall mounted 2-door cabinet for storage.

b. One (1) toilet.

c. One (1) wall mounted toilet paper holder.

d. One (1) wastebasket.

e. One (1) ventilation exhaust fan.

f. No windows.

14. One kitchenette area shall be connected to the water and the septic system and shall include the following:

a. Kitchen sink with running hot and cold water.

b. Kitchen sink base cabinet with 2 doors minimum.

c. Refrigerator with ice maker, minimum 20 cubic feet.

d. Microwave.

Formatted: Indent: First line: 0.03"

Formatted: Indent: Left: 0.88", First line: 0.03"

e. Dual 12-cup coffee maker (includes two pots that each makes 12 cups).

f. Table with top surface area to accommodate microwave and coffee maker.

g. No window.

2.1.4 Services

1. Lighting 50 foot-candles at desktop height throughout the trailer including all rooms; Exterior lighting at entrance doors.

2. Heating and air conditioning throughout the trailer including all rooms. ~~and the~~ Provide a separate portable air conditioning unit on wheels in the IT closet capable of cooling a minimum of 400 square feet of confined space.

3. Electrical Service: The Contractor shall provide a minimum number of circuits, 110V, 60 hertz; duplex convenience outlets in each cubicle and in the restroom.

4. IT service conduits.

2.1.5 Contractor Provided Office Supplies

1. Single Supplied Items:

a. Heavy duty stapler ~~for each trailer~~ for use with large format size drawings.

b. Heavy duty hole punch ~~for each trailer~~ for use with large format size drawings.

c. Staplers for each office, each admin area and each cubicle.

d. Hole Punch for each office, each admin area and each cubicle.

e. Shoe Scrapers:

1) One (1) at the stairs.

2.2 STORAGE SHEDS AND TRAILERS

2.2.1 On-Site

1. Provide temporary buildings or trailers needed for storage of equipment and materials installed under this contract (and those furnished by District or others under separate contract.

2. Provide ventilation and heating as required by equipment and material stored.

2.2.2 Off-Site

1. Advise the District of any arrangements made for storage of Equipment and Materials in a place other than District's Site. The Contractor

shall furnish evidence of insurance coverage with Application for Payment in conformance with the Section 00700 GENERAL TERMS & CONDITIONS.

2.3 JON BOAT AND OUTBOARD MOTOR AND TRAILER

1. Provide a boat, outboard motor and trailer for District use for the duration of the project. The boat, outboard motor and trailer shall become the property of the District when the construction is complete and accepted. The use of brand names in these Specifications is used for the purpose of establishing a grade or quality. Bidders proposing to use an alternate that is equal to or superior to in every respect to that required by the Specifications must request approval in writing to the District in accordance with the Instructions to Bidders.

2. Boat shall be a 2019 Lowe L1436 Jon Boat or equal to or superior product and shall meet the following requirements:

   a. Overall: 13'9

   b. Beam: 57"

   c. Basic Hull Weight: 185 lbs.

   d. Hull Gauge: 0.064"

   e. Bottom Hull Width: 36"

   f. Max HP Capacity: 20 hp

   g. Max Person Capacity: 3

   h. Max Person Weight: 350 lbs.

   i. Max Weight Capacity: 675 lbs.

   j. Ribs: 8

   k. Seats: 3

   l. Side Depth: 17"

   m. Transom Depth: 15"

3. Motor shall be manufactured by Honda or equal to or superior product and shall meet the following requirements:

   a. Type: 4 Stroke SOHC 2 Cylinder/4 Valves

   b. Displacement: 222 cc

   c. Rated Power: 9.9 HP @5,500 rpm

   d. Transom Height: 15 inches

   e. Dry Weight : 92 lb

4. Trailer

   a. Type: Aluminum Single Axle with winch. Compatible with Boat & Motor

   b. Tires and Wheels: 12" Aluminum with spare

5. Accessories

   a. 6 Gallon Marine Fuel Tank

   b. Outboard Motor Cart for 9.9 Honda (pneumatic tires)

   c. 3 OSHA Compatible Construction Life Jackets

   d. OSHA Throwable Life Ring

   e. Miscellaneous ropes, lines, anchors, oars and other safety equipment required by local, state and federal agencies

2.4 ROUGH TERRAIN VEHICLE

1. Provide ~~a~~ two (2) rough terrain vehicles (RTV) for District use for the duration of the project. The RTV's shall become the property of the District when the construction is complete and accepted. The use of brand names in these Specifications is used for the purpose of establishing a grade or quality. Bidders proposing to use an alternate that is equal to or superior to in every respect to that required by the Specifications must request approval in writing to the District in accordance with the Instructions to Bidders.

2. RTV's shall be a 2019 Kubota RTV-X1140WL-H or Equal to or Superior Product and shall meet the following requirements:

   a. Diesel Engine:

      1) Model Kubota D1105

      2) 3 Cylinder 68.5 cu in

      3) 24.8 Gross Engine HP

      4) 60 Amp alternator

   b. Transmission:

      1) VHT-X

      2) Variable Hydro Transmission

      3) Speeds: L 0-15mph, H 0-25mph, R 0-17mph

      4) Limited slip front differential, rear differential lock

   c. Hydraulics:

      1) Hydrostatic power steering with manual tilt-feature

2) Hydraulic cargo dump

3) Hydraulic oil cooler

d. Fluid Capacity:

1) Fuel tank: 7.9 gallons

2) Cooling: 8.3 quarts

3) Engine oil: 4.3 quarts

4) Transmission oil: 1.8 gallons

5) Brake fluid: 0.4 quarts

e. Cargo Box:

1) Width: 57.7 inches

2) Length: 40.5 inches

3) Depth: 11.2 inches

4) Load capacity: 1,102 lbs.

5) Volume capacity: 15.2 cu ft.

6) Factory spray-in bed liner

f. Tires and Wheels:

1) Heavy duty worksite (HDWS) tires 25x10-12, 6 ply

g. Color:

1) Kubota Orange

h. Additional STANDARD features

1) Speedometer

2) Front/rear wet-disc brakes

3) Digital multimeter

4) Front and rear independent adjustable suspension

5) Rear brake lights, front headlights

6) Under seat storage compartments

7) Deluxe front guard

8) Deluxe 60/40 split bench seats

9) Dash-mounted parking brake

i. Safety:

1) 2-point seat belts

2) Horn

3) Spark arrestor muffler Retractable

4) SAE J2194 & OSHA 1928 ROPS

j. Additional options to be included ~~(~~on each RTV (NO substitutions):

1) VC5043-Plastic Canopy

2) VC5023-Poly Carbonite Windshield W/Hard

3) V5059-External rearview mirror

4) K7591-99610 Turn Signal Hazzard Lights

5) K7591-99640 Back Up Alarm

6) 77700-VC5056-LED Strobe Light Cab

7) 77700-VC5080-Wire Harness Kit

8) 77700-VC5050 Work Lights LED Front (2)

9) 77700-VC5051A Work Lights LED Rear (1)

10) 77700-V5244 Heavy Duty Winch

11) V5200-Trailer Hitch - Ball Mount

12) K7621-99810 Extended Engine Oil Dipstick

13) 2YR RTV-X1140WL-H Extended Warranty (1,500 Hrs)

14) 2 - 5 gallon metal fuel canisters

PART 3 EXECUTION

3.1 LOCATION, INSTALLATION AND MAINTENANCE OF NEW QA LABORATORY FIELD OFFICE TRAILER

3.1.1 General

1. It is anticipated that there will be multiple separate construction contracts under construction at this site at the same time.

2. Previous construction packages were responsible for installing and maintaining a ~~QA laboratory field office and three~~four (~~3~~4) District field office trailers (~~office~~ trailer no's. 1 through ~~3~~4). The Contractor shall be responsible for providing and installing one (1) QA Laboratory field office trailer as part of this contract.

3. With the addition of the QA Laboratory field office trailer provided for in this contract there will be a total of ~~four~~ five (~~4~~5) field office trailers~~ and one QA Laboratory field office trailer~~.

4. Completely install the new QA Laboratory field office trailer. Buildings shall be in accordance with all Hendry County code requirements including all wind requirements.

5. Contractor to disassemble and reassemble existing chain link fence and gate as required to place and set the QA Laboratory field office trailer.

6. Contractor to construct the additional parking as required.

7. Contractor shall install all furniture and items specified in PART 2 in the QA Laboratory field office trailer.

8. Contractor shall install the portable air conditioner so that it is vented and drains to the gravel drain constructed outside of the trailer to collect the condensate from the air conditioners. Vent the portable air conditioner as required.

~~8~~9. Contractor shall repair immediately any damage, leaks, or defective services related to the new QA Laboratory field office trailer.

~~9~~10. ~~-~~Contractor shall be responsible for the security of the additional QA Laboratory field office trailer.

~~10~~11. ~~The parking~~Preserve and protect the existing shell rock parking area. Repair any areas damaged caused by the trailer installation to their existing condition.~~ shall have a shell rock surface matching the existing. Refer to the drawings for the shell rock limits and a section showing the shell rock.~~

~~11~~12. Upon substantial completion of Bid Package 3 (Pump Station S-470) the Contractor shall mow and maintain the grounds at the District's construction compound and to 10 feet outside of the fence. Mowing shall include the shoulders (to 6 feet beyond the edge of the pavement) of Congen Road. Mowing and maintenance shall occur not less than every two weeks.

3.1.2 Commissioning

1. The Contractor shall schedule, coordinate, provide access and make necessary provisions for a site fire inspection of the new field office trailer and all other permitted building by the Hendry County Fire Chief.

2. The Contractor shall turn on all services in the QA Laboratory field office trailer and demonstrate that all features operate properly.

3.2 LOCATION, INSTALLATION AND MAINTENANCE OF TEMPORARY STORAGE SHEDS AND TRAILERS

3.2.1 General

1. Place temporary buildings, trailer, and stored materials in locations acceptable to District.

2. Install~~ed~~ field office trailer and sheds to resist winds and elements of the locality where installed.

3. Keep approach walks free of mud and water.

4. Prepare ground or paved areas as indicated and/or as specified in applicable specification sections.

5. Do not use the pre-load embankment material for temporary construction, including but not limited to dirt road stabilization, trailer pads, construction compound embankment, etc.

3.3 WATER SYSTEM

3.3.1 General

1. It is anticipated that the existing water system will have been extended and stubbed out to serve the QA Laboratory field office trailer. The Contractor shall make all the necessary modifications, if required, to connect to the existing water distribution system stub out.

2. Excavation and if required excavation, trenching, compaction and backfill shall be completed in accordance with SECTION 31 00 00.

3.3.2 Costs of Installation and Operation

1. Contractor shall pay fees and charges for permits and applications.

2. The Contractor shall be responsible for the materials and installation costs of connecting the QA Laboratory field office trailer to the existing water distribution system.

3. The Contractor shall be responsible for all costs associated with providing and maintaining water service to the Contractor's field office trailer.

3.4 WASTEWATER SYSTEM

3.4.1 General

1. The Contractor is responsible for the design (design by Hendry County) and permitting of the septic tank and drain field wastewater system for the QA Laboratory field office trailer.

2. The Contractor shall furnish all equipment, plant, material, labor, supervision, and coordination for the construction of a septic tank and drain field wastewater system for use by the QA Laboratory field office trailer.

3.4.2 Costs of Design, Installation and Operation

1. The Contractor shall pay the fee required by Hendry County to design, permit and inspect the septic tank and drain field wastewater system.

According to Hendry County the design and inspection fee is $500 for a system to serve up to 40 people. Contractor shall confirm the amount.

2. The Contractor shall be responsible for the materials and installation costs for the septic tank and drain field wastewater system.

3.5 ELECTRIC AND IT SERVICE

3.5.1 Electric

It is anticipated that the existing electric service will have been extended and stubbed out to serve the QA Laboratory field office trailer. The Contractor shall make all the necessary modifications, if required, to connect to the existing service stub out.

3.5.2 IT

The Contractor shall provide and install 1-4 inch PVC and 1-2 inch PVC conduit connecting the existing computer equipment room in existing trailer no. ~~3~~ 4 to the network closet in the QA Laboratory field office trailer.

3.6 CLOSEOUT

Upon completion of the installation of the QA Laboratory field office trailer and all appurtenances, obtain and submit a detailed as-built survey of the new QA Laboratory building and the QA Laboratory field office trailer. The survey shall include but not be limited to final grading, trailer and building locations, septic tank/drain field locations, utility locations, fence and gate location and parking, including the overflow parking area.

3.7 BOAT, MOTOR AND TRAILER

Contractor shall provide fuel, maintenance repairs and replacement accessories as needed for the boat, motor and trailer for the duration of the project.

3.8 RTV'S

Contractor shall provide fuel, maintenance repairs and replacement accessories as needed for the RTV's for the duration of the project.

3.9 AT COMPLETION OF THE PROJECT

At the completion of the project the Contractor shall notify the District at least 10 working days in advance before demobilizing the QA Laboratory field office, and temporary buildings and sheds. Demobilizing activities include the following:

1. Remove temporary buildings, foundations (if any), and debris.

2. Disconnect, cap, and bury the water supply service to the QA Laboratory field office trailer.

3. Disconnect the power source to the QA Laboratory field office trailer at the disconnect box.

4. Disconnect the IT cables to the QA Laboratory field office trailer in the IT closet of the source office trailer.

5. Disconnect, cap, and bury the sanitary sewer lateral to the QA Laboratory field office trailer.

6. Abandon the septic tank and drain field in place in accordance with Hendry county requirements.

7. Remove the QA Laboratory field office trailer and its furnishings from the site.

8. Do not remove any of the existing District field office trailers.

~~9. The boat, motor, trailer and accessories and the RTV will become the property of the District.~~

-- End of Section --

SECTION 01 53 00

TEMPORARY CONSTRUCTION

PART 1 GENERAL

1.1 SUMMARY

Summary of Work: The Work specified in this Section consists of:

a. Controlling site access. Site access control shall be provided by the Contractor to control/monitor traffic and deliveries entering the Project for the duration of the construction period. The site access control shall include a temporary, prefabricated guard house that is manned during all hours of construction. The guard duties will include controlling and directing incoming traffic including directing visitors to the District trailers.

b. Maintaining traffic within the limits of the Project and for the duration of the construction period. It shall include the construction and maintenance of temporary access roads as required, furnishing, installing, and maintaining of traffic control and safety devices during construction, the control of dust (see Section 01 56 05 TEMPORARY BARRIERS AND CONTROLS), and any other special requirements for safe and expeditious movement of traffic as may be called for on the Drawings or as directed by the District.

c. Managing, controlling and diverting the existing surface and ground water drainage away from the project work sites.

1.2 RELATED WORK SPECIFIED ELSEWHERE

There are other specification sections that relate to this section that are not necessarily cited herein.

1.3 REFERENCES

The publications listed below form a part of this specification to the extent referenced. The publications are referred to within the text by the basic designation only.

ASTM INTERNATIONAL (ASTM)

ASTM B209	(2014) Standard Specification for Aluminum and Aluminum-Alloy Sheet and Plate
ASTM B241/B241M	(2016) Standard Specification for Aluminum and Aluminum-Alloy Seamless Pipe and Seamless Extruded Tube
ASTM B429/B429M	(2010; E 2012) Standard Specification for Aluminum-Alloy Extruded Structural Pipe and Tube
ASTM B483/B483M	Aluminum and Aluminum Alloy drawn Tubes for General Purpose Applications

ASTM C578	(2018) Standard Specification for Rigid, Cellular Polystyrene Thermal Insulation
ASTM C1289	(2017) Standard Specification for Faced Rigid Cellular Polyisocyanurate Thermal Insulation Board

NATIONAL ELECTRICAL MANUFACTURERS ASSOCIATION (NEMA)

ANSI/NEMA LD 3	(2005) Standard for High-Pressure Decorative Laminates

NATIONAL FIRE PROTECTION ASSOCIATION (NFPA)

NFPA 70	(2017; ERTA 1-2 2017; TIA 17-1; TIA 17-2; TIA 17-3; TIA 17-4; TIA 17-5; TIA 17-6; TIA 17-7; TIA 17-8; TIA 17-9; TIA 17-10; TIA 17-11; TIA 17-12; TIA 17-13; TIA 17-14) National Electrical Code

UNDERWRITERS LABORATORIES (UL)

UL	Entire Code

FLORIDA DEPARTMENT OF TRANSPORTATION (FDOT)

FDOT	Standard Specifications for Road and Bridge Constructions

1.4 SUBMITTALS

Submit the following in accordance with Section 01 33 00 SUBMITTAL PROCEDURES:

SD-01 Preconstruction Submittals

Site Plan

Site Access Control Plan

SD-02 Shop Drawings

Guard House

Bulletin Board

SD-03 Product Data

Guard House

SD-07 Certificates

Guard House

Security Personnel

1.5 SUBMITTAL REQUIREMENTS

Submit a Site Plan with the following details:

a. Indicate the location of the entry control guard house, the routing of the supporting utilities, the temporary restroom facility, protective bollards, the bulletin board, a parking space for the guard and the access turn around.

b. Indicate all temporary access roads to be improved and or developed for this construction.

c. Indicate the proposed drainage scheme for managing the surface water drainage.

d. Note that as construction progresses the temporary access roads and the scheme for managing the surface water may change. Additional site plan submittals will be required with the changes.

Submit Shop Drawings:

a. Submit guard house plans, elevations, sections. Indicate standard and optional component features, dimensions, materials, anchoring details, and other items required for fabrication and installation.

b. Submit bulletin board plan, elevation, section, details. Include the recommended method for waterproofing the information side. Identify all parts by name and material and showing design, construction, installation, anchorage and relation to adjacent construction.

Submit Guard House Product Data:

a. Provide literature that lists/describes the guard house including; finishes, lighting, door types, glass type, built-in furnishings and utilities.

Submit a Site Access Control Plan:

a. Not later than 14 calendar days after the preconstruction meeting the Contractor shall meet with the District to review site access and security concerns and protocol.

b. Following that meeting submit a plan that describes the site access control protocol including the guard's duties and responsibilities and other processes as listed below. The Contractor shall provide bonded and licensed personnel dedicated to managing and controlling access to the project site during all hours of construction. The protocol shall include but not be limited to:

    1. Badging or identification cards for all construction personnel.

    2. Temporary passes for visitors and delivery personnel.

    3. Monitoring the delivery of equipment and materials.

    4. Maintaining worker, delivery and visitor logs.

1.6 WARRANTY

The guard house warranty shall meet the requirements specified in Section 01 61 03 EQUIPMENT AND MATERIALS.

1.7 PERMITS

The Contractor shall apply for and obtain all building permits associated with installing the guard house.

1.8 DELIVERY, STORAGE AND HANDLING

a. Transport the guard house in a manner to avoid damage during shipment, with all tags and labels intact and legible, as applicable for timely application/installation.

b. Inspect guard house for and note all damages to products on the carrier's bill of lading, and report damages immediately for proper compensation and reorder of product if necessary.

c. Handle guard house in a manner to prevent damage from dropping, improper handling, damages, and careless storage.

1.9 QUALITY ASSURANCE

Submit Guard House Certificates:

a. Submit manufacturer's certification that the testing results meet the manufacturing quality control of the proposed guard house, at least 30 days before the District approves or disapproves the unit proposed for installation.

Submit Security Personnel certification:

a. Contractor shall provide certification that the security personnel stationed at the guard house who are responsible for controlling, managing and monitoring the access to the site are licensed and bonded.

PART 2 PRODUCTS

2.1 EMBANKMENT MATERIALS

Embankment materials shall conform to Section 31 00 00 EARTHWORK.

2.2 BASE

The temporary access roadway base (if used) shall conform to Section 32 11 39 SHELL BASE COURSE.

2.3 ASPHALT CONCRETE PAVEMENT

The temporary access roadway pavement (if used) shall conform to Section 32 12 16 HOT-MIX ASPHALT (HMA) FOR ROADS.

2.4 SHELL ROCK

If the temporary access roads are constructed of shell rock refer to Section 32 11 39 SHELL BASE COURSE for the shell rock requirements.

2.5 GUARD HOUSE

The guard house shall be a High Velocity Hurricane Zone Vista Series as manufactured by Mardan Fabrication, Inc. of approved equal. The guard house dimensions shall be a minimum 9 feet x 12 feet, have right left sliding doors and a standard roof profile. The guard house shall include the following components:

a. Frame: Frame comprising the structure shall be .125-inch minimum tubular aluminum frame, bronze color finish (ASTM B241/B241M). Aluminum tubes shall be mechanically fastened into each panel for reinforcement, including all necessary hardware. Hardware shall be of stainless steel.

b. Wall panels: Impact resistant, moisture resistant and expansion resistant composite with .063-inch-thick smooth finish aluminum exterior sheets insulated with rigid insulation (ASTM C578, ASTM C1289). Interior panels shall be prefinished white aluminum dent resistant composite sheet. (ASTM B209).

c. Roof: Roof panel shall be a total of 3-inch-thick composite and shall have prefinished white aluminum with stucco embossed finish on top and bottom. Provide 3-inch overhang on all sides and 8-inch-high fascia. Roof scupper(s) shall be provided for water runoff. Roof shall be sealed at all joints and seams for a complete weatherproof roof system using a Florida Building Commission approved or Miami Dade County accepted product. Provide downspouts and splash blocks for the roof drainage.

d. Glazing: All wall and door panels shall be glazed with Low E insulate, laminated, impact resistant safety glass with aluminum frames and sealed to prevent water infiltration.

e. Door(s): 1-1/2-inch-thick, fully weather-stripped top-hung sliding door(s) with mortise type hook bolt locking device. Door shall be manufactured from .125-inch extruded aluminum sections, with a fixed window glazing to match booth. Door panel shall match the exterior of the booth. Heavy duty hardware and manufacturer's standard commercial grade key locking device to be factory installed.

f. Flooring: Aluminum treadplate floor covering over .125-inch aluminum tube sub-floor supports (ASTM B429/B429M, ASTM B483/B483M). Supports to be spaced to minimize defection without failure and welded to the booth frame as an integral part of the booth framing system. Required number of pre-engineered and pre-drilled anchor clips to be provided.

g. Counter/Shelf: Unit shall be provided with plastic laminate (ANSI/NEMA LD 3). Counter shall be mechanically fastened to reinforced rib sections of wall structure. Provide access opening for electrical cords as required.

h. Unit shall be pre-wired with interior grade plastic coated #12 THHN copper stranded wiring run through ½ inch minimum surface mounted EMT

conduit. Unit shall be supplied with a 125-amp 120/240 volt, S.P. 8-circuit load center. Manufacturer to supply branch circuit breakers for all factory supplied electrical equipment. Standard load center does not include main breaker.

i. Electrical rough-in shall be coordinated by Contractor for proper placement in slab to match prefabricated booth's electrical access cut out in floor.

j. Unit shall be equipped with a wall switch for lights and with a minimum of one duplex electrical receptacle, located as shown on shop drawings.

k. Unit shall be equipped with light fixture(s). Number, size, type and location of fixtures as per shop drawings.

l. Units shall be wired in accordance with National Electric Code (NFPA 70). All components shall be ETL listed by UL or other nationally recognized testing lab.

m. HVAC: Unit shall provide sufficient BTU rating for the area where the project is located, and size of prefabricated booth specified. Unit shall include an impact resistant louvered grille which must be a Florida Building Commission approved Miami Dade county accepted product. Unit shall be thermostatically controlled. Unit shall be pre-wired and UL/ETL listed.

2.6 BULLETIN BOARD

a. The bulletin board mounting structure and framing shall be of wood or metal, structurally adequate to withstand wind and environmental conditions in accordance with all applicable laws and regulations. Provide with a finish adequate to withstand weathering, fading, chipping, and peeling for duration of construction.

b. The bulletin board panel shall be constructed of minimum 3/4-inch thickness B/C exterior grade plywood. Panel shall be one sheet with an overall size of 48 inches by 96 inches.

c. If the frame and support system is constructed of wood the material shall be of pressure treated materials suitable for exterior use.

d. Rough hardware shall be galvanized steel or aluminum.

e. Paint shall be suitable for outdoor applications and shall be resistant to weathering, peeling, chipping and fading. Color shall be approved by the District.

f. The natural-cork sheet shall be seamless, single-layer, compressed fine-grain cork sheet; bulletin board quality; face sanded for natural finish. The cork shall be secured to the plywood using a manufacturer recommended adhesive for the cork and plywood interface.

PART 3 EXECUTION

3.1 EMBANKMENT CONSTRUCTION

a. The embankments required for the access roads shall be constructed to accommodate all construction traffic including equipment and material deliveries.

b. See Section 31 00 00 EARTHWORK for the requirements for the placement of the embankment materials.

c. The Contractor shall provide adequate drainage for all temporary construction and as directed by the District.

3.2 ROADWAY BASE CONSTRUCTION

The base shall be constructed to the lines and grades shown on the Drawings and conform to Section 32 11 39 SHELL BASE COURSE.

3.3 ASPHALT CONCRETE PAVEMENT

All pavement for the access roads shall be constructed as shown on the Drawings and conform to Section 32 12 16 HOT-MIX ASPHALT 9HMA0 FOR ROADS.

3.4 TRAFFIC CONTROL

The Contractor shall provide, install, and maintain adequate traffic control devices, warning devices, and barriers as noted in Section 01 55 26 TRAFFIC CONTROL and in accordance with FDOT Standard Specification Section 102-5, Traffic Control, and applicable sections of the Manual of Traffic Control and Safe Practices for Street and Highway Construction.

3.5 REMOVAL

The temporary access roadway base, surface, and embankments shall be removed to the original grades and lines or those required on the Drawings. Embankment fill and base materials not required for the temporary work shall be disposed of in the designated areas or as directed by the District. The asphalt pavement shall be disposed of off-site. All disturbed areas outside the footprint of the dam embankment shall be grassed in accordance with Section 32 92 19 SEEDING. All existing pavement, shoulders, drainage, and other appurtenances that are to remain shall be restored to their pre-construction conditions.

Note that the haul roads constructed by others to be used in this project are to remain in place. Materials from the haul roads are not to be used for the dam embankment.

3.6 SITE ACCESS CONTROL

Prior to the placement of the prefabricated guard house the Contractor shall install a 6-inch-thick WWF reinforced concrete slab suitable to accept and secure the guard house. See Section 03 31 01.00 CAST-IN-PLACE CONCRETE FOR CIVIL WORKS. Coordinate the guard house anchoring system with the construction of the slab. The slab shall extend no less than 3 inches on all side beyond the exterior dimensions of the guard house. Additionally,

all necessary utilities including communications shall have been brought to the guard shack location and roughed in for connections to the guard house.

3.6.1 Installation

Set guard house on the prepared concrete slab.

a. Minor adjustments to the guard house may be necessary at the time of installation due to possible variances and irregularities in poured concrete slab.

b. Set guard house plumb and aligned. Level true with full bearing on concrete slab.

c. Fasten with expansion anchors at pre-drilled anchor points.

d. Connect electrical and communications utilities.

3.6.2 Adjusting and Cleaning

a. Adjust doors, operable windows, and hardware to operate smoothly, properly, and without binding. Confirm that locks engage easily without forcing or binding. Lubricate hardware and other moving parts.

b. The guard house will be the "Gateway to the Project" and where all personnel including guests and dignitary's will enter. It is important that the entry area be maintained in a neat and clean condition. It shall be the Contractor's responsibility for the maintenance of the guard house area.

3.6.3 Miscellaneous Appurtenances

a. Install bollards as indicated.

b. Install the temporary restroom facility near the guard house.

3.6.4 Removal

a. At completion of construction the Contractor shall remove the guard house, the utility lines that were installed for the guard house, the bollards and the concrete slab. The Contractor shall also remove the gate installed at the guard house location. Return areas disturbed from the removals to a neat, clean, graded to drain and grassed condition acceptable to the District.

-- End of Section --

SECTION 01 55 26

TRAFFIC CONTROL

PART 1 GENERAL

1.1 SUMMARY

Summary of Work: The Work of this Section shall consist of furnishing all labor, material, and equipment and performing all operations associated with traffic control within Florida Department of Transportation (FDOT) right of way as it relates to entering and exiting the project site from SR-80 and for any work in the SR-80 right-of-way associated with the Townsend Canal improvements in accordance with the Drawings and applicable codes and as specified herein.

This section also applies to the traffic control required for the reconstruction of Congen Road

The Contractor shall provide Maintenance of Traffic (MOT) in accordance with the Florida Department of Transportation (FDOT) Standard Specifications for Road and Bridge Construction Section 102 and FDOT Standard Index No. 600.

1.1.1 RELATED WORK SPECIFIED ELSEWHERE

There are other specification sections that relate to this section that are not necessarily cited herein.

1.2 APPLICABLE STANDARDS AND PUBLICATIONS

1.2.1 References

The edition of the standards of the organizations listed below in effect at the time of the advertisement for bids form a part of this specification to the extent referenced. See the various paragraphs for the specified standard. In the case of a conflict between the requirements of this Section and those of the listed document, the requirements of this Section shall prevail.

FLORIDA DEPARTMENT OF TRANSPORTATION (FDOT)

FDOT	Standard Specifications for Road and Bridge Constructions

AMERICAN ASSOCIATION OF STATE HIGHWAY AND TRANSPORTATION OFFICIALS (AASHTO)

U.S. DEPARTMENT OF TRANSPORTATION (FHWA)

FHWA	Manual on Uniform Traffic Control Devices

1.3 SUBMITTALS

Submit the following in accordance with Section 01 33 00 SUBMITTAL PROCEDURES:

SD-01 Preconstruction Submittals

Maintenance of Traffic (MOT) Plan

1.4 SUBMITTAL REQUIREMENTS

The Contractor shall submit a Maintenance of Traffic (MOT) Plan meeting the requirement of the FDOT Index No. 600 Series. The MOT plan shall be for ingress and egress to the site from SR-80 and for Work at/around the SR-80 bridges within the FDOT R/W.

If required by jurisdictional authority for the roadway impacted by the Work/access, the Contractor shall hire a Professional Engineer registered in the State of Florida with current FDOT Advanced MOT Certification to design the temporary traffic control plan(s). Plan(s) must address all phases of the Work.

PART 2 PRODUCTS

2.1 GENERAL

Coordinate with the Drawings to verify which of the following products is used in the Work.

2.1.1 HIGHWAY SIGNING

Erecting aluminum or steel roadway signs with supporting posts, at the locations shown on the plans. The roadway signs and material shall conform to the requirements of FDOT Standard Specifications: Section 700.

2.1.2 RAISED RETRO-REFLECTIVE PAVEMENT MARKERS

Installing raised retro-reflective pavement markers and removing pavement markers within the Project limits as designated in the plans. The reflectorized pavement markers and materials shall conform to the requirements of FDOT Standard Specifications: Section 706.

2.1.3 PAINTING TRAFFIC STRIPES

Painting reflectorized traffic stripes, including edge stripes and traffic guide. The painting and materials shall conform to the requirements of FDOT Standard Specifications: Section 710.

2.1.4 THERMOPLASTIC TRAFFIC STRIPES AND MARKINGS

Placing and materials shall conform to the requirements of FDOT Standard Specifications: Section 711.

PART 3 EXECUTION

3.1 SIGNS, MARKERS, PAINTING

1. Erection of signs and sign supports shall be in accordance with Section 700 of the FDOT Specifications.

2. Placement of the markers shall be in accordance with Section 706 of the FDOT Specifications.

3. Thermoplastic markings shall be in accordance with Section 711 of the FDOT Specifications.

-- End of Section --

SECTION 01 56 05

TEMPORARY BARRIERS AND CONTROLS

PART 1 GENERAL

1.1 SUMMARY

Summary of Work: This Section includes general requirements for the protection of the work and the protection of existing property, temporary barriers, site security, environmental controls, access roads and parking areas and traffic control and use of roadways within the project site.

1.2 RELATED WORK SPECIFIED ELSEWHERE

There are other specification sections that relate to this section that are not necessarily cited herein.

1.3 APPLICABLE STANDARDS AND PUBLICATIONS

FLORIDA DEPARTMENT OF TRANSPORTATION (FDOT)

FDOT	Standard Specifications for Road and Bridge Constructions

1.4 SUBMITTALS

Submit the following in accordance with SECTION 01 33 00 SUBMITTAL PROCEDURES:

SD-01 Preconstruction Submittals

Traffic Control and Barrier Plan

Security Check In System

Dust Control System

1.5 SUBMITTAL REQUIREMENTS

Contractor shall submit an internal traffic control and barrier plan that shall include the approach to addressing safety and protection of work; temporary barriers for on-site use; dust control; surface water management and erosion control; maintenance of irrigation farm ditches that are to remain in service; debris control and clean up; pollution control; traffic control; maintenance and repair of paved and unpaved roadways and site security.

Contractor shall also prepare and submit a plan for the security check in system.

The Contractor shall prepare and submit a dust control system.

PART 2 PRODUCTS

Not used

PART 3 EXECUTION

3.1 SAFETY AND PROTECTION OF WORK AND PROPERTY

3.1.1 General

1. The Contractor shall provide for the protection of the Work as set forth in the GENERAL TERMS & CONDITIONS. Provide protection at all times against rain, wind, storms, frost, freezing, condensation, or heat so as to maintain all Work and Equipment and Materials free from injury or damage. At the end of each day all new Work likely to be damaged shall be appropriately protected.

   a. Protect embankments during construction limiting and mitigating slope erosion. See Section 31 00 00 EARTHWORK.

2. The Contractor shall notify the District immediately if at any time, operations are stopped due to conditions which make it impossible to continue or to obtain proper results.

3. The Contractor shall construct and maintain all necessary temporary drainage and do all pumping necessary to keep excavations, pits, and trenches dewatered sufficiently to permit continuous construction. Maintenance includes but is not limited to removing and disposing of debris and vegetation that prevents the effective management of the temporary drainage systems.

4. The Contractor shall protect floors from damage by proper covering and care when handling heavy equipment, painting, or handling mortar or other such materials. Use proper cribbing and shoring to prevent overloading of floors while moving heavy equipment. Provide metal pans under pipe-threading machines and other machines that may leak oil and clean such pans daily, keeping oil off of the floors. Restore floors to former condition where damaged or stained.

5. The Contractor shall not load concrete floors less than 28-days old without the written permission from the District.

6. The Contractor shall restrict access to roofs except as required by the Work. Where access is required, provide protection with plywood, boards, or other suitable materials.

7. It should be noted that surface water elevations in the Townsend Canal are subject to considerable fluctuation as a result of ongoing farming operations to the south, and the size of the drainage basin that drains through the Townsend Canal. Following the passage of hurricane Irma in September 2017, the Townsend Canal stage was estimated to be above elevation +8 feet NAVD. The Contractor shall regularly and intentionally coordinate work activities along the Townsend Canal with local farmers and land owners to limit the impact of potential high stages in the Townsend Canal that may affect the timing, progress, the need for removal of damaged work, and associated re-work. Additional temporary cofferdams may be required provided they do not impede flow in the Townsend Canal. The Contractor shall pay all additional costs for the required coordination and potential rework as necessary.

3.1.2 Property Other than Districts

1. The Contractor shall provide for the protection of property as set forth in the GENERAL TERMS & CONDITIONS. Report immediately to the owners thereof and promptly repair damage to existing facilities resulting from construction operations.

2. Names and telephone numbers of representatives of the power company having jurisdiction over power lines in the Work area can be obtained from the District. The Contractor shall contact the power company a minimum of seven (7) calendar days prior to performing Work within 500' of power transmission line property, right-of-way or easement lines.

3. The applicable requirements specified for protection of the Work shall also apply to the protection of existing property of others.

4. The Contractor shall restore all property affected by the Contractor's operations to the original or better condition and to the satisfaction of the District.

3.2 BARRIERS

3.2.1 General

1. The Contractor shall furnish, install, and maintain suitable barriers as required to prevent public entry, to protect the public, and to protect the Work, existing facilities, trees, and plants from construction operations. Remove the barriers when no longer needed or at completion of the Work.

2. The Contractor may use new or used materials, suitable for the intended purpose, but must not violate requirements of applicable codes and standards or of regulatory agencies.

3. Barriers shall be of a neat and reasonably uniform appearance, structurally adequate for the required purposes.

4. The Contractor shall maintain barriers in good repair and a clean condition for adequate visibility.

5. The Contractor shall relocate barriers as required by progress of the Work or as directed by the District.

6. The Contractor shall repair damage caused by the installation of barriers and restore damaged areas to original or better condition, to the satisfaction of the District.

3.3 ENVIRONMENTAL CONTROLS

3.3.1 Dust Control

1. Dust control is considered an ongoing activity. The approach to and methodology for controlling dust during each work day shall be included in the proposed dust control system. At a minimum the Contractor shall use water trucks to control the dust. The Contractor shall provide and make available water trucks to control the dust on a daily basis. As a

minimum, unless it is raining, the Contractor shall use the water trucks or some other method to suppress the dust at beginning of each day and at the end of each day. The Contractor shall suppress and control the dust during each day as needed and as directed by the District.

2. The Contractor shall clean interior spaces and surfaces prior to the start of finish painting and continue cleaning on an as-needed basis until painting is finished.

3. The Contractor shall schedule operations so that dust and other contaminants will not fall on wet or newly-coated surfaces.

4. The Contractor shall cover materials transported to and from Site as necessary to prevent depositing material on offsite roadways or creating dust.

3.3.2 Water and Erosion Control

1. The Contractor shall provide methods necessary to control surface water to prevent damage to the Work, the Site, or adjoining properties as specified in Section 31 32 11 SOIL SURFACE EROSION CONTROL AND Section 31 00 00 EARTHWORK.

2. The Contractor shall control fill, grading, and ditching to direct surface water away from excavations and other construction areas, and to direct surface water to proper storage and/or conveyance facilities.

3. The Contractor shall control surface water and ground water as necessary to prevent flooding, erosion, or other damage to any portion of the Site and/or to adjoining areas.

4. Contractor shall make provisions for mitigating, controlling and containing stockpile material runoff. This includes returning the stockpile material to the stockpile.

3.3.3 Debris Control and Clean-Up

1. The Contractor shall keep the premises free at all times from accumulations of debris, waste materials, and rubbish. The Contractors responsibilities shall include, but not be limited to the following:

   a. Provide adequate trash receptacles at the Site, emptied promptly when filled.

   b. Periodic cleanup to avoid hazards or interference with operations at the Site and to maintain the Site in a reasonably neat condition.

   c. The keeping of construction materials such as forms and scaffolding neatly stacked.

   d. Immediate cleanup to protect the Work by removing splattered concrete, oil, paint, corrosive liquids, and cleaning solutions from walls, floors, and other surfaces before the surfaces are marred.

2. The Contractor shall prohibit overloading of trucks to prevent spillages on access and haul routes. Provide periodic inspection of traffic areas to enforce requirements.

3. Final cleanup is specified in Section 01 77 10.

3.3.4 Pollution Control

1. The Contractor shall provide methods, means, and facilities required to prevent contamination of soil, water, or atmosphere by the discharge of hazardous or toxic substances from construction operations.

2. The Contractor shall provide equipment and personnel and perform emergency measures required to contain any spillages, and to remove contaminated soils or liquids. Excavate and dispose of any contaminated earth off-site in approved locations conforming to all rules and regulations and replace with suitable compacted fill and topsoil.

3. The Contractor shall take special measures to prevent harmful substances from entering public waters, sanitary sewers, or storm sewers.

4. If hazardous materials are discharged, report to authorities as required by applicable law or regulations and notify the District, immediately.

3.4 TRAFFIC CONTROL AND USE OF ROADWAYS

3.4.1 Traffic Control

1. The Contractor shall provide, operate, and maintain equipment, services, and personnel, with traffic control and protective devices, as required to expedite safe vehicular traffic flow on haul routes, at Site entrances, onsite access roads, and parking areas. This includes barricades and other devices or personnel as necessary to adequately protect the public. The Traffic Control and Barrier Plan for the internal site traffic shall provide a clear understanding of how the construction traffic will be managed including the traffic control measures that will be included.

2. The Contractor shall remove temporary equipment and facilities when no longer required. The Contractor shall restore grounds to original, better, or specified conditions.

3. The Contractor shall provide and maintain suitable detours or other temporary expedients if necessary.

4. Bridge over open trenches where necessary to maintain traffic including the heavy construction equipment.

5. The Contractor shall consult with the District to establish thoroughfares which will be used for Site access. All operations shall meet the approval of the District.

3.4.2 Maintenance of Roadways

1. The Contractor shall repair off-site roads (state and county roads, i.e. SR-80), water control and District structures damaged by operations. Keep traffic areas as free as possible of excavated materials and maintain in a manner to eliminate dust, mud, and hazardous conditions.

2. The Contractor shall, on a daily basis, keep all state and county roadways clean of mud and debris resulting from hauling materials to and from the project site.

3. All operations and repairs to the roadways shall meet the approval of owners or agencies having jurisdiction.

3.5 SECURITY

The Contractor is solely responsible for initiating and maintaining security at the construction Site. Contractor shall take all necessary precautions for the security of, and shall provide the necessary protection related to:

1. Materials and equipment incorporated into the Work or stored on-site prior to incorporation into the Work.

2. Temporary field offices and sheds, and their contents including those listed in Section 01 52 13 FIELD OFFICES AND SHEDS.

3. Plant and equipment including any equipment furnished for use by the District.

4. The Contractor shall replace, in kind, any materials or equipment lost, damaged or destroyed at no cost to the District.

5. The Contractor is made aware that security check in to the site will be required during this contract.

6. A sign in process for all vendors, contractor employees and subcontractor employees will be established. The process will include daily check-in, permanent personnel badging and vehicle tagging/stickers.

7. The security check in shall be located at the main entrance to the project. The security plan shall include a temporary vehicle access pass system and a temporary personnel access pass system. The process may also include escort services by the Contractor during certain activities as identified by the District. See Section 01 53 00 TEMPORARY CONSTRUCTION for guard house and other related site access controls required.

-- End of Section --

SECTION 01 58 13

TEMPORARY PROJECT SIGNAGE

PART 1 GENERAL

1.1 SUMMARY

Summary of Work: This Section includes basic requirements for temporary Project Identification and Informational signs required during construction. Requirements for temporary safety signage are provided in Section 01 35 26 SAFETY REQUIREMENTS.

1.2 SUBMITTALS

Submit the following in accordance with Section 01 33 00 SUBMITTAL PROCEDURES.

SD-02 Shop Drawings

Project Sign

1.3 SUBMITTAL REQUIREMENTS

Contractor shall submit shop drawings for the project sign. The submittal shall include but not be limited to the sign dimensions, sign and sign mounting materials and dimensions, the sign message and artwork, the font size(s) and colors and the proposed sign location.

PART 2 PRODUCTS

2.1 DESIGN REQUIREMENTS

The Contractor shall design sign(s) and structure(s) to withstand wind and environmental conditions in accordance with all applicable laws and regulations. Provide with a finish adequate to withstand weathering, fading, chipping, and peeling for duration of construction. Replace project sign if excessive wear or fading occurs during the duration of contract.

2.2 IDENTIFICATION SIGNS

2.2.1 Project Identification

1. The Contractor shall construct sign mounting structure(s) and framing of wood or metal, structurally adequate to meet the requirements of Paragraph DESIGN REQUIREMENTS above and/or as shown on the Contract Documents.

2. The Project Identification sign panel shall be constructed of minimum 3/4-inch thickness B/C exterior grade plywood. Panels shall be one sheet with an overall size of 48 inches by 96 inches. Fonts to be 3 inches high.

3. Rough hardware shall be galvanized steel or aluminum.

4. Coating: Paint shall be suitable for outdoor applications and shall be resistant to weathering, peeling, chipping and fading. Sign colors shall be approved by the District.

5. Information Content:

   a. Project title/name, location, District logo and name as shown on the Contract Documents

   b. Names and titles of Governing Board Members

   c. Name of prime Contractor and major Subcontractors

2.2.2 Contractor Identification

As indicated on the drawing.

2.2.3 Design Engineer Identification

Include the names as indicated on the drawing.

2.3 INFORMATIONAL SIGNS

2.3.1 Construction

1. This includes signs for traffic, construction workers, and general public in regard to directions, warnings, hazards, locations of areas, facilities, equipment, and others of a similar nature. See Section 01 35 26 SAFETY REQUIREMENTS for additional safety sign requirements.

2. The Contractor shall provide signs of design, size, color, and lettering as required by regulatory agencies and/or as shown on the Contract Documents. Signs shall be painted metal, plastic, or fiberglass. Materials shall be suitable for the conditions in which signs are to be placed, such as weathering and fading.

3. The Contractor shall construct sign mounting structure(s) and framing of wood or metal, structurally adequate to meet the requirements to meet paragraph DESIGN REQUIREMENTS above or as shown on the Contract Documents.

PART 3 EXECUTION

3.1 INSTALLATION

3.1.1 Project and Contractor Identification Signs

The Contractor shall

1. Install all required signs in locations as indicated or as acceptable to the District. Install so as not to obstruct traffic or construction operations.

2. Erect on framing or foundation, and rigidly brace.

3. Maintain signs in good repair, in a neat, clean and readable condition.

4. Remove all signs, framing, supports, and foundations upon completion of the Project.

3.1.2 Informational Signs

The Contractor shall

1. Install at appropriate locations and in sufficient quantities to assure visibility. Relocate as required by progress of the Work.

2. Maintain signs in good repair, in a neat, clean, and readable condition.

3. Remove all signs, framing, supports, and foundations upon completion of the Project.

-- End of Section --

SECTION 01 61 03

EQUIPMENT AND MATERIALS

PART 1 GENERAL

1.1 SCOPE

1.1.1 Summary of Work

This Section includes general requirements for transportation, handling, delivery, storage, (including fuel storage), and protection of Contractor and District - furnished Equipment and Materials.

1.1.2 Related Work Specified Elsewhere

1. SECTION 01 33 00 SUBMITTAL PROCEDURES
2. Section 01 25 02 PRODUCT OPTIONS AND SUBSTITUTIONS
3. Section 01 75 16 START UP/CHECK OUT/MANUFACTURER'S FIELD SERVICES FOR CONTRACTOR FURNISHED EQUIPMENT
4. Section 01 87 02 EQUIPMENT AND SYSTEM PERFORMANCE AND OPERATIONAL TESTING
5. Section 01 91 00 COMMISSIONING

1.2 DEFINITIONS

Definitions used in this Paragraph are not intended to negate the meaning of other terms used in the Contract Documents, including such terms as "systems," "structure," "finishes," "accessories," "furnishings," "special construction," and similar terms. Such terms are self-explanatory and have recognized meanings in the construction industry.

1.2.1 Products

Items purchased for incorporation in the Work, regardless of whether they were specifically purchased for the Project or taken from the previously purchased stock. The term "product" includes the terms "material," "equipment," "system," and other terms of similar intent.

1.2.2 Equipment

A product with operational or non-operational parts, regardless of whether motorized, manually operated, or fixed. Equipment may require service connections such as wiring or piping.

1.2.3 Materials

Products that must be substantially cut, shaped, worked, mixed, finished, refined or otherwise fabricated, processed, or installed to form part of the Work.

1.3 QUALITY REQUIREMENTS

1.3.1 Equipment and Material Incorporated into the Work

Provide products that comply with the requirements of the Contract Documents, are undamaged, and unless otherwise indicated, are unused at the time of installation. The Contractor shall provide products that are complete with all accessories, trim, finish, safety guards, and other devices and details needed for a complete installation and for the intended use and effect.

1.3.2 Standard Products

Where they are available and comply with the Technical Specifications, provide standard products of types that have been produced and used successfully in similar situations on other projects.

1.3.3 Continued Availability

Where, because of the nature of its application, the District is likely to need replacement parts or additional amounts of a product at a later date, either for maintenance and repair or replacement, provide standard products for which the Manufacturer has published assurances that the products and its parts are likely to be available to the District at a later date.

1. Conform to applicable Technical Specifications, codes, standards, and regulatory agency requirements.

2. Comply with size, make, type, and quality specified, or as specifically approved in writing by the District.

3. Manufactured and Fabricated Products:

    a. Design, fabricate, and assemble in accordance with the best engineering and shop practices.

    b. Manufacture like parts of duplicate units to standard sizes and gauges, to be interchangeable.

    c. Equipment and Materials shall be suitable for service conditions intended.

    d. Equipment capacities, sizes, and dimensions indicated or specified shall be adhered to unless variations are specifically approved in writing.

    e. Provide labels and nameplates where required by regulatory agencies or to state identification and essential operating data.

    f. Two (2) or more items of the same kind shall be identical, supplied by the same Manufacturer.

4. Do not use equipment and material for any purpose other than that for which it is designed or is specified.

1.3.4 Source Limitations

To the fullest extent possible, provide products of the same kind from a single source.

1.3.5 Identification

Each item of equipment shall have permanently affixed to it a label or tag with its equipment number designated in this Contract. The label or tag shall be stainless steel and shall be located so as to be easily visible.

1.4 TRANSPORTATION AND SHIPMENT

1.4.1 Shipment Preparation

The Contractor shall require Manufacturers and suppliers to prepare Equipment and Materials for shipment in a manner to facilitate unloading and handling, and to protect against damage or unnecessary exposure in transit and storage, for Contractor supplied equipment. Provisions for protection shall include the following:

1. Crates or other suitable packaging materials

2. Covers and other means to prevent corrosion, moisture damage, mechanical injury, and accumulation of dirt in motors, electrical equipment, and machinery

3. Suitable rust-preventive compound on exposed machined surfaces and unpainted iron and steel

4. Grease packing or oil lubrication in all bearings and similar items

5. Precast concrete components shall be transported, lifted and stored as specified by the precast supplier. Precast supplier shall provide written instructions to the Contractor as to the above. The Contractor shall provide a copy to the District.

1.4.2 Marking

Each item of Equipment and Material shall be tagged or marked as identified in the delivery schedule or on Submittals, submitted in accordance with Section 01 33 00. Complete packing lists and bills of material shall be included with each shipment. Each piece of every item need not be marked separately, provided that all pieces of each item are packed or bundled together and the packages or bundles are properly tagged or marked.

1.5 DELIVERY, STORAGE AND HANDLING

1.5.1 Delivery:

1. Arrange deliveries of Equipment and Materials in accordance with cost loaded construction schedules, in ample time to facilitate inspection prior to installation, and to avoid delay of the Work.

2. Deliver, store and handle Equipment and Materials in accordance with the Manufacturer's recommendations using means and methods that will prevent damage, deterioration, and loss, including theft.

3. Control delivery schedules to minimize long term storage at the Site and to prevent overcrowding of construction areas. In particular, coordinate delivery and installation to ensure minimum holding or storage times for items known or recognized to be flammable, hazardous, easily damaged, or sensitive to deterioration, theft, and other sources of loss.

4. Avoid conflict with Work of District or other contractors.

5. Deliver Equipment and Materials to the Site in Manufacturer's sealed containers or other packaging system with identifying labels and instructions for handling, storing, unpacking, protecting, and installing.

6. Mark deliveries of component parts of equipment to identify the equipment, to permit easy accumulation of parts, and to facilitate inspection and measurement of quantity or counting of units.

7. Immediately upon delivery, inspect shipment to assure:

   a. That each product complies with requirements of Contract Documents and reviewed Submittals.

   b. Quantities are correct.

   c. Containers and packages are intact, labels are legible.

   d. Equipment and Materials are properly protected and undamaged.

1.5.2 Storage:

1. Store Equipment and Materials immediately after delivery, and protect it as necessary until completion of the Work. Store in accordance with Manufacturer's instructions with seals and labels intact and legible.

2. Store Equipment and Materials in a manner that will not endanger the supporting construction and/or existing structures and facilities.

3. Store Equipment and Materials that are subject to damage by elements in weathertight enclosures.

4. Maintain temperature and humidity within ranges required by the Manufacturer.

5. Protect motors, electrical equipment, plumbing fixtures, and machinery of all kinds against corrosion, moisture deteriorations, mechanical injury, and accumulation of dirt or other foreign matter.

6. Protect exposed-machined surfaces and unpainted iron and steel as necessary with suitable rust-preventive compounds.

7. Protect bearings and similar items with grease packing or oil lubrication.

8. Handle and store steel plate, sheet metal, and similar items in a manner to prevent deformation.

9. Exterior Storage:

   a. Provide platforms, blocking, or skids to support fabricated products aboveground; and to prevent soiling, staining and damage. Cover products subject to discoloration or deterioration from exposure to the elements, with impervious sheet coverings. Provide adequate ventilation to avoid condensation.

   b. Store loose granular materials on solid surface areas to prevent mixing with foreign matter.

   c. Provide surface drainage to prevent flow or ponding of rainwater.

10. Equipment and Materials shall not show any pitting, rust, decay, or other deleterious effects of storage prior to final acceptance of Work.

11. Arrange storage in a manner to provide easy access for inspection. Make periodic inspections of stored products to assure that products are maintained under specified conditions, and are free from damage or deterioration.

1.5.3 Handling:

1. Provide equipment and personnel necessary, to properly unload and handle Equipment and Materials, by methods to prevent damage, soiling and /or staining of the Equipment and Materials, or packaging.

2. Handle by methods to prevent bending or overstressing. Where lifting points are designated, lift components only at those points.

3. Provide additional protection to surrounding surfaces as necessary to prevent damage.

1.5.4 Maintenance of Storage:

1. Inspect stored Equipment and Materials on a regularly scheduled basis.

2. Verify that storage facilities comply with the Manufacturer's product storage requirements, including environmental conditions continually maintained.

3. Verify that surfaces of products exposed to elements are not adversely affected; that any weathering of finishes is acceptable under requirements of Contract Documents.

4. For mechanical and electrical equipment in long-term storage, provide the Manufacturer's service instructions to accompany each item, with notice of enclosed instructions on the exterior of the package. Service the Equipment, as necessary on a regularly scheduled basis.

1.5.5 Protection after installation:

1. Provide substantial coverings as necessary to protect all installed Equipment and Materials from damage from subsequent construction operations. Remove the protective coverings when no longer needed or as specified.

1.5.6 Warranty

The Contractor shall warranty the Work against defects for one (1) year from the date of Substantial Completion and as described in Article 13 of Section 00700 - GENERAL TERMS AND CONDITIONS.

The Manufacturer shall warrant the EQUIPMENT, MATERIALS, and PRODUCTS specified in the subsequent sections, against defective materials and workmanship with the Manufacturer's extended warranty, for no less than the time period identified in the table in the SUPPLEMENTAL CONDITIONS. The extended warranty period will begin after the Contractor's one (1) year warranty; and as described in Article 13 of Section 00700 - GENERAL TERMS AND CONDITIONS. The Manufacturer shall provide a special Manufacturer's extended warranty for the stipulated period, or a Warranty Bond, to extend the Manufacturer's warranty period for the stipulated period.

1.6 EXISTING EQUIPMENT AND MATERIALS

1.6.1 Equipment and Materials to be reused

1. For Equipment and Materials specifically indicated or specified to be reused in the Work, use special care in removal, handling, storage, and reinstallation to assure proper function in the completed Work.

2. Arrange for transportation, storage and handling of products which require off-site storage, restoration, or renovation and pay all costs for such work.

3. The Contractor may at his option, furnish and install new items in lieu of those specified to be reused.

4. Remove, relocate and reinstall the following Equipment and Materials:

   a. Remove and stockpile the embankment pre-load material as indicated.

1.6.2 Equipment and Materials not to be reused

1. The following Equipment and Materials to be removed shall remain District's property and are not to be reused in the Work. The Contractor shall Remove from its location, prepare for handling and storage, and deliver to District.

   a. None

C. Equipment and Materials designated to be removed but not reused or delivered to District, shall become the property of the Contractor and shall be removed from the Site.

PART 2 PRODUCTS

2.1 PRODUCTS AND MANUFACTURERS

Specified in each applicable Section of the Technical Specifications and/or Drawings.

2.2 PRODUCT SELECTION AND SUBSTITUTIONS

Specified in the Instructions to Bidders and Section 00700 GENERAL TERMS AND CONDITIONS

PART 3 EXECUTION

3.1 MANUFACTURER'S INSTRUCTIONS

3.1.1 Installation

1. When Contract Documents require that installation of Work shall comply with Manufacturer's printed instructions, the Contractor shall:

    a. Obtain and distribute copies of such instructions if not a part of Submittals, containers, or packaging to all parties involved in the installation, including a copy to the District.

    b. Maintain one complete set of instructions at the Site during installation and until Final Acceptance.

    c. Handle, install, connect, clean, condition, and adjust all products in accordance with such instructions and in conformance with the specified requirements. Should job conditions or specified requirements conflict with the Manufacturer's instructions, consult with the District for further instructions.

    d. Not omit any preparatory step or installation procedure unless specifically modified or exempted by the Contract Documents, or approved in writing by the Manufacturer and the District.

    e. Accurately locate and align with other work, and anchor all Equipment and Materials securely in place except as required for proper movement and performance.

    f. Clean and protect all exposed surfaces as necessary to ensure freedom from damage and deterioration until Final Acceptance.

-- End of Section --

01 61 07

EQUIPMENT ALIGNMENT

PART 1 GENERAL

1.1 SCOPE

1.1.1 Summary of Work

This specification section covers furnishing all labor, materials, and equipment for the alignment of shaft coupled machines to eliminate premature machine failure due to misalignment. This section provides general information and should not be relied on solely for the alignment requirements. The Contractor shall submit detailed descriptions of the alignment methods proposed for the equipment specified. The focus of the details in regard to the alignment requirements should be specified in the section that pertains to the equipment.

1.2 DEFINITIONS

a. ACCESSIBLE: The ability to reach and adjust the aligning feature. Consideration should be given to confined space restrictions, removing guards, bushing plates, hydraulic lines, lubrication lines, electric lines etc.

b. ALIGNMENT TARGET SPECIFICATIONS: Desired intentional offset and angularity at coupling center to compensate for thermal growth and/or dynamic loads. Most properly specified as an OFFSET, and an angle in two perpendicular planes, horizontal and vertical.

c. ANGULAR ERROR: A misalignment condition characterized by the angular error between the desired centerline and the actual centerline. This misalignment condition may exist in planes both horizontal and vertical to the axis of rotation. (Reference Figure 5 within Attached Document, entitled: Figures)

d. ANGULARITY: The angle between the rotational centerlines of two shafts. Angularity is a "slope" expressed in terms of a rise (millimeters or thousandths of an inch) over a run (meter or inches). (Reference Figure 8 within Attached Document, entitled: Figures)

e. AXIAL PLAY, AXIAL FLOAT, END FLOAT: Shaft axial movement along its centerline caused by axial forces, thermal expansion or contraction, and permitted by journal bearings, sleeve bearings and/or looseness.

f. BASE PLATE: The surface often made of steel plate or cast iron, to which the feet of a machine are attached. (Reference Figure 10a and 10b within Attached Document, entitled: Figures)

g. CO-LINEAR: Co-linear means two lines that are positioned as if they were one line. Co-linear as used in alignment means two or more centerlines of rotation with no offset or angularity between them. Two or more lines are co-linear when there is no offset or angularity between them (i.e. they follow the same path).

h. COPLANAR: The condition of two or more surfaces having all elements in one plane.

i. COUPLING POINT: The phrase "COUPLING POINT" in the definition of SHAFT ALIGNMENT is an acknowledgment that vibration due to misalignment originates at the point of power transmission, the coupling. The shafts are being aligned and the coupling center is just the measuring point.

j. COUPLED SHAFTS ALIGNMENT: Coupled shaft alignment is the positioning of two or more machines so that the rotational centerlines of their shafts are co-linear at the coupling center under operating conditions.

See figure within Attached Document, entitled: Figures.

k. ECCENTRICITY: The distance of the axis from the geometric center. The axis could be the shaft axis or the rotating center defined by the bearings.

m. FULL BEARING FITTING SPACER BLOCK: A single spacer block used for aligning the machine tool in the vertical plane.

n. FLATNESS: The condition of a surface having all elements in one plane. As used in this specification, a flat is a small surface flush with or cut into a BASE PLATE, machined flat, and co-planar with the other flats in the base plate. The flats support the Shims and/or feet of the machine to be installed. A pad is a small block of metal that serves to elevate the feet of the machine above the surface of the base plate. Pads are commonly used compensate for differences in machine center line heights, and for increased corrosion resistance by raising the machine feet out of any possible standing fluids. Pads and flats have holes drilled and tapped in their centers to accept hold down bolts.

o. HORIZONTAL: Parallel to the mounting surface.

p. JACKBOLTS, JACKSCREWS, PUSH/PULL BLOCKS: Positioning bolts on the machine base which are located at, each foot of the machine and are used to adjust the position of the machines. Bolts mounted on the machine base or foundation, optimally at the machine foot locations, which provides exact control in positioning the machine.

q. LEVEL: Parallel to a reference plane or a reference line established by a laser.

r. MACHINE: The total entity made up of individual machine components such as motors, pumps, spindles, fixtures, etc. Also reference MACHINE COMPONENT.

s. MACHINE BASE: The structure that supports the machine or machine components under consideration.

t. MACHINE COMPONENT: An individual unit such as a motor, pump, spindle, fixture, etc. often referred to as a machine in its own context.

u. MACHINE DEPENDENT: A condition which is dependent on the machining operation and the design requirement of the part being machined.

v. OFFSET: The distance (in thousands of an inch or in millimeters) between two reference centerlines such as a spindle center line and a part characteristic centerline (Reference Figure 6 within Attached Document, entitled: Figures) or the rotational centerlines of two parallel shafts. (Reference Figure 8 within Attached Document, entitled: Figures)

w. OUT-OF-ROUNDNESS: Deviation from a perfect circle.

x. PITCH: An angular misalignment in the vertical plane.

y. POSITION ERROR (CENTERLINE/OFFSET MISALIGNMENT): A misalignment condition that exist when the spindle/shaft centerline is parallel but not in line with (not coincidental) with the desired alignment centerline. (Reference Figure 6 and Figure 8 within Attached Document, entitled: Figures)

z. PUSH-PULL BLOCKS: Side push-pull adjustment blocks used for aligning machine tool in the horizontal plane.

aa. QUALIFYING LEVEL POINTS: Qualified leveling points are locations which have their heights defined and must be in same plane. That plane must be parallel to the mounting surfaces of the slide assembly.

bb. REPEATABILITY: The consistency of readings and results between consecutive sets of measurements.

cc. RUN-OUT: The composite deviation of a circular part during one full rotation of 360 degrees. Run-out includes out-of-roundness, eccentricity and offset.

dd. SHAFT ALIGNMENT: Positioning two or more machines (e.g. a motor driving a hydraulic pump(s), etc.) so that the rotational centerlines of their shafts are collinear at the coupling center under operating conditions. (Reference Figure 9 within Attached Document, entitled: Figures)

ee. SPINDLE ALIGNMENT: The geometric relationship between the spindle axis or rotation and a reference datum.

ff. SOFT FOOT: A condition that exists when the bottom of all of the feet of the machinery components are not on the same plane (can be compared to a chair with one short leg). Soft foot is present if the machine frame distorts when a foot bolt is loosened or tightened. It must be corrected before the machine is actually aligned.

gg. PARALLEL SOFT FOOT: A parallel gap between the machine foot and its support surface.

hh. ANGULAR SOFT FOOT: An angled gap between the machine foot and its support surface.

ii. INDUCED SOFT FOOT: A type of soft foot that is caused by external forces, (pipe strain, coupling strain, etc.,) acting on a machine independent of the foot to base plate connection.

jj. "SQUISHY" SOFT FOOT: A type of soft foot characterized by material (shims, paint, rust, grease, oil, dirt, etc.) acting like a spring between the underside of the machine foot and the base plate contact area.

kk. SPACER BLOCKS: See FULL BEARING FITTING SPACER BLOCK.

ll. STRESS FREE CONDITION: The condition that exists when there are no forces acting on the structure of a machine, machine component, or machine base that would cause distortion in the structure such as bending, twist, etc.

mm. THERMAL EFFECTS (GROWTH OR SHRINKAGE): This term is used to describe displacement of shaft axes due to machinery temperature changes (or dynamic loading effects) during start-up.

nn. TOLERANCE, DEADBAND, WINDOW, OR ENVELOPE: An area where all misalignment forces sum to a negligible amount and no further improvement in alignment will reduce significantly the vibration of the machine or improve efficiency.

oo. TOLERANCE VALUES: Maximum allowable deviation from the desired values, whether such values are zero or non-zero.

qq. TRACKING/TRACKING ERROR: An angular MISALIGNMENT condition between spindle centerline and the machine way centerline. This condition may be present in both parallel and perpendicular to the way centerline. (Reference Figure 4 within Attached Document, entitled: Figures).

rr. VERTICAL: Perpendicular to the horizontal plane.

ss. YAW MISALIGNMENT: An angular misalignment in the horizontal plane.

PART 2 EQUIPMENT AND MATERIALS

2.1 GENERAL REQUIREMENTS

The alignment specialist shall employ the standard practices and use the necessary instruments to achieve the required alignment. Vibration shall not be used as a criterion to judge alignment. The alignment shall be judged with static measurement instruments fixtured to shafts and judged in accordance with the allowable tolerance limits shown below.

2.1.1 Measurement System

The measurement system shall be repeatable to within 0.002 inch when exercised through a complete cycle. The measurement system shall be checked for repeatability at the start of each alignment task after the system is in place on the machine to insure the set-up is rigid and satisfies the repeatability requirements. The measurement system shall have a resolution of 1 mil or less. Mechanical dial indicators, properly mounted, are acceptable as measuring devices.

2.1.2 Gravity Sag

The alignment specialist shall compensate for gravity sags of the measuring fixture of greater than 0.002 inch.

2.1.3 External Strain

2.1.3.1 Piping

Pipe flanges shall be mated with no more than 200 pounds force applied to the flange bolts.

2.1.3.2 Fluids Handling Machinery

Flanged connection to the machine shall be checked for residual pipe strain. With measuring devices positioned at each end of the machine, the machine anchor bolts shall be loosened. Movement indicated on the measuring devices greater than 0.005 inch indicates unacceptable external strain on machine.

2.1.4 2.1.4 Axial Spacing

For machines with plain bearings, the axial spacing shall be set with the machine pushed against the thrust bearing similar to the operating condition. For electric motors with thrust bearings, the axial spacing shall be set with the armature positioned at the motor magnetic center.

2.1.5 Bases and Foundations

The bottoms of the machine feet shall rest on the base or the foundation with 90 percent contact of the footprint. A 0.003 inch thick shim shall not penetrate under any foot with all hold-down bolts loose. A dial indicator or other measuring device shall be positioned to measure the vertical rise at each foot as the hold-down bolt is loosened. All other bolts shall remain tight. A rise of less than 0.002 inch shall be considered acceptable. A rise of 0.002 inch or more shall be corrected with shims. The test shall be repeated at all feet until a less than 0.002 inch rise is measured at each foot.

2.1.5.1 Shims

All shims shall be pre-stamped stainless steel.

2.1.6 Shaft Run-out

The exposed shaft of each machine shall be measured for run-out. The total indicated reading (T.I.R.) shall be no more than 0.001 inch.

2.1.7 Thermal Growth

The alignment technician shall estimate and correct for any change, thermal or mechanical, from cold alignment conditions to hot running conditions. Thermal growth calculations shall be made for any temperature change greater than 100 F degrees.

2.1.8 Machine Adjustments

Machines shall be adjusted by small precise movements. Excessive force that could cause damage shall be avoided. Jackscrews are the preferred method of adjustment.

2.1.8.1 Bolt-bound Conditions

The following adjustment methods may be used for machines that are restrained and without a means for adjustment.

a. Undercutting the bolt diameter to remove threads.

b. Reducing bolt size one nominal fractional size.

c. Enlarging hole if structural integrity is not compromised.

d. Tilting machine with differential shimming.

2.1.9 Final Measurement

After adjustment of the machine is complete, the hold-down blots shall be tightened to the Manufacturer's recommended torque. A final set of shaft to shaft readings shall be taken and reported as the final orientation.

2.2 SHAFT ALIGNMENT TOLERANCES

All shaft-to-shaft centerline alignments shall be within the tolerances specified in Table 1 unless more precise tolerances are specified by the machine Manufacturer or by the District for special applications.

TABLE 1 COUPLED SHAFT ALIGNMENT TOLERANCE VALUES

	RPM	**TOLERENCE SPECIFICATION**	
SOFT FOOT	ALL	<.002 inch at each foot	
	RPM	HORIZONTAL & VERTICAL PARALLEL OFFSET	ANGULARITY/GAP Inch/10 inch Coupling Diameter
SHORT COUPLINGS	600	.005 inch	.010 inch
	900	.003 inch	.007 inch
	1200	.0025 inch	.005 inch
	1800	.002 inch	.003 inch
	3600	.001 inch	.002 inch
	7200	.0005 inch	.001 inch
		HORIZONTAL & VERTICAL PARALLEL OFFSET PER INCH OF SPACER LENGTH	

	RPM	TOLERENCE SPECIFICATION	
COUPLINGS WITH SPACERS	600	.0018 inch	
	900	.0012 inch	
	1200	.0009inch	
	1800	.0006 inch	
	3600	.0003 inch	
	7200	.00015 inch	

Jackshafts: Below "critical speed" of jackshaft, short coupling tolerances apply to each coupling of the jackshaft. Above "critical speed" of jackshaft, short coupling tolerances apply relative to the centerlines of the two machines.

The Tolerances specified in Table 1 are the maximum allowable deviations from Zero-Zero Specifications or ALIGNMENT TARGET SPECIFICATIONS (i.e. an intention targeted offset and/or angularity).

Acknowledging that machines often move after start-up due to THERMAL GROWTH, dynamic load shifts, etc., the alignment parameters shall be measured and adjusted for operating conditions.

2.3 MACHINE BASES

2.3.1 Machine Base Construction

a. A solid and rigid machine base is required to achieve and maintain shaft alignment.

b. Where bases are constructed using concrete or grouts, final shaft alignment shall not be conducted until ample curing time has taken place. (A minimum of Thirty days is recommended)

c. Where the machine foundation installation specification does not require a concrete or grout base or the installation schedule does not permit the proper cure time for the concrete/grout, refer to Figures 10a and 10b for suggested alternate machine base constructions.

d. Where corrosion is or may be a problem, the base must be fabricated of corrosive resistant materials.

e. Where the machine base is constructed from commercially available steel or castings:

   1. Use H, M, I, square, tube, and bar shapes with a minimum 0.5 inch thickness.

   2. For machine bases consisting of a single steel plate, plate thickness must equal or exceed the thickness of the machine foot, but be no less than 1.0. The plate surface that the driver and driven machines will be bolted to must be machine ground and of sufficient size to accommodate the machine components, push/pull blocks and/or jack screws. Jackscrews must not rest on any rounded edges.

   3. Use of channel or angle stock is not recommended. Where use is necessary, the channel or angle stock must be reinforced using square bar or plate meeting the preceding thickness requirements.

f. After all welding and machining is completed, stress relieve the entire base.

2.4 SHIMS

Shims shall meet the following specifications:

a. Commercially die-cut.

b. Made of corrosion and crush resistant stainless steel, which is dimensionally stable when subjected to high compression over long periods of time.

c. Consistent over the whole shim area, without seams or folds from bending.

d. Clean, free from burrs, bumps, nicks and dents of any kind.

e. Size numbers or trademarks etched into the shim, not printed or stamped.

f. The smallest commercial shim that will fit around the hold down bolts without binding shall be used.

g. The overall shim pack shall not exceed a total of three (3) shims.

h. Shims must rest on bare metal, not paint or other coatings.

2.5 MACHINE VERTICAL MOBILITY

All machines shall be installed with a minimum of .125 inch dimensionally stable shims under each surface mounting point for vertical mobility.

2.6 COUPLING PLAY/BACKLASH

OEMs must use only the couplings specified unless otherwise agreed upon by the District. During the alignment process coupling play or backlash must be eliminated to accomplish a precision shaft alignment.

2.7 AXIAL SHAFT PLAY

Axial shaft play or end play must be no greater than .125 inch (3.175 mm). Accommodation of end movement must be done without inducing abnormal loads in the connecting equipment.

PART 3 EXECUTION

3.1 COUPLED SHAFTS ALIGNMENT VERIFICATION

a. Alignment will be performed at the Manufacturer's shop or at the job site as per the recommendations of the District.

b. When verifying the alignment of coupled shafts the Manufacturer must document and provide the following data for each set of coupled shafts:

   1. Alignment tolerances used

   2. SOFT FOOT

   3. Vertical ANGULARITY (Pitch) at the COUPLING POINT (Refer to Figure 9 within Attached Document, entitled: Figures)

   4. Vertical OFFSET at the coupling point

   5. Horizontal angularity (Yaw) at the coupling point

   6. Horizontal offset at the coupling point

c. This information shall be provided to the District at the time of functional check out.

d. Verification of alignment and re-alignment will be conducted at the job site during installation of the equipment.

3.2 FOOT CENTER LINES

The stiffness of the machine base shall be sufficient that no foot centerline shall deform or deflect more that .001 inch (.0254 mm) over the operating range from alignment conditions to full load conditions.

3.3 JOINING SHAPES TOGETHER

When joining shapes together they shall conform to the appropriate applicable American Welding Society (AWS) standard(s) for welding.

3.4 REQUIREMENTS FOR MACHINE PADS OR FLATS

After all welding and machining has been completed and the base has been stress relieved, the surface of all pads or flats for each machine to be installed on the base must be co-planar, within .001 inch (0.0254 mm). (Refer to Figures 10a and 10b)

3.5 MACHINE BASE SUPPORT

The feet of the driver and driven machines must not overhang the machine base.

3.6 JACKBOLTS

Jackbolts shall be located at the front and rear feet of the movable machine for horizontal alignment positioning. (This requirement also applies to vertically mounted units and vertically mounted flanged units). Jackbolts shall be parallel to the flat/pad surface and align on the center line formed by the hold down bolts in the cross machine direction. Ample room shall be left for removal and insertion of shims used in the vertical alignment of the coupled machines.

3.7 HOLD-DOWN BOLTS

The use of hold down bolts is the preferred method of fastening components to the base. Hold-down bolts shall meet the following specifications:

a. Hold-down bolts for both the driver and the driven machine(s) (in pairs or in trains) shall be positioned (spotted) after the machine's shafts have been aligned.

b. Hold-down bolts shall be centered in the hole of the machine foot.

c. Hold-down bolts shall be the preferred method of fastening machines to the base.

d. Hold-down bolts shall not be undercut ("Chicagoed") to achieve HORIZONTAL adjustment.

3.8 PIPING

Piping must be fitted, supported, and sufficiently flexible such that soft foot due to movement caused by tightening pipe flanges doesn't exceed .002 inch.

-- End of Section --

SECTION 01 61 07

EQUIPMENT ALIGNMENT

FIGURES

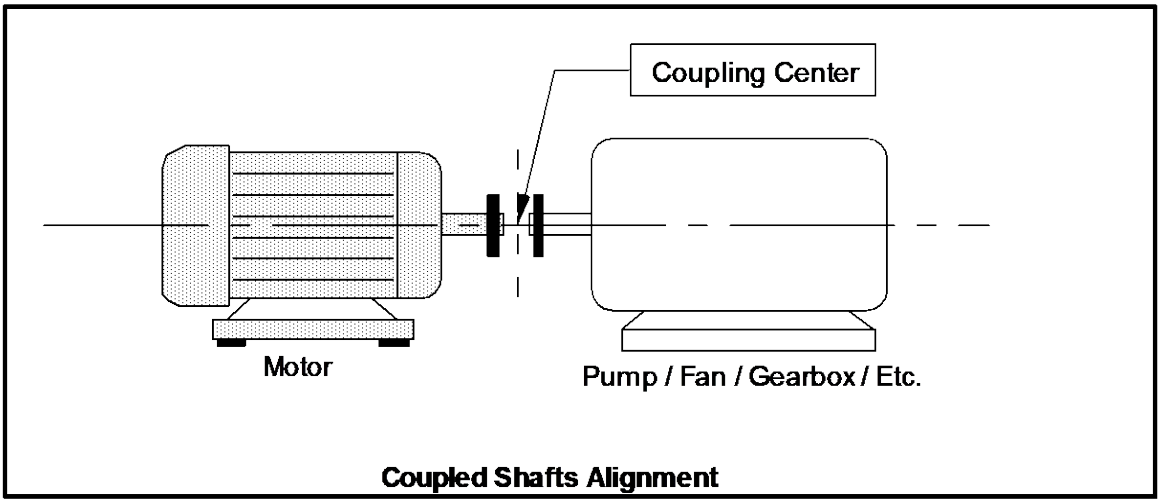

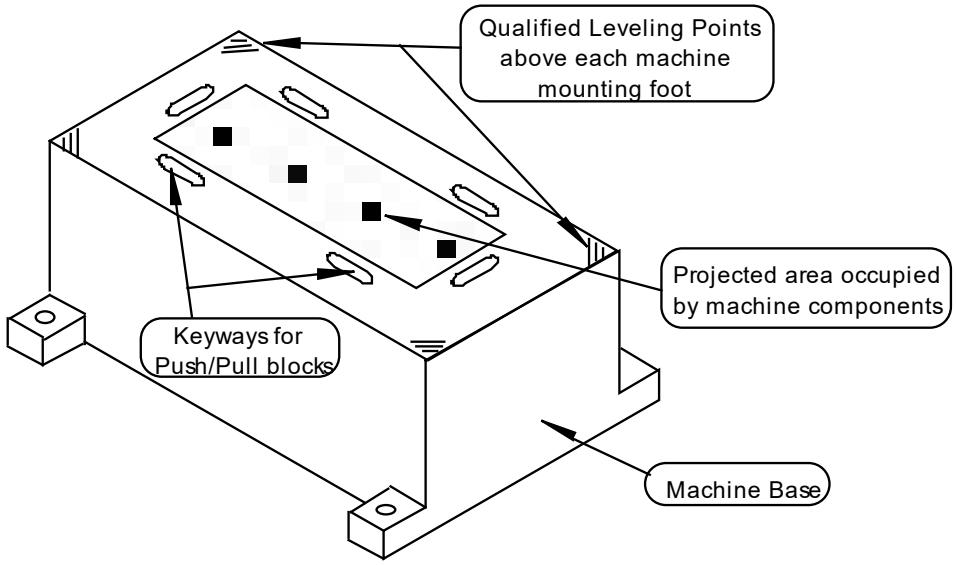

Figure No. 1
Qualified leveling points & keyways for push pull

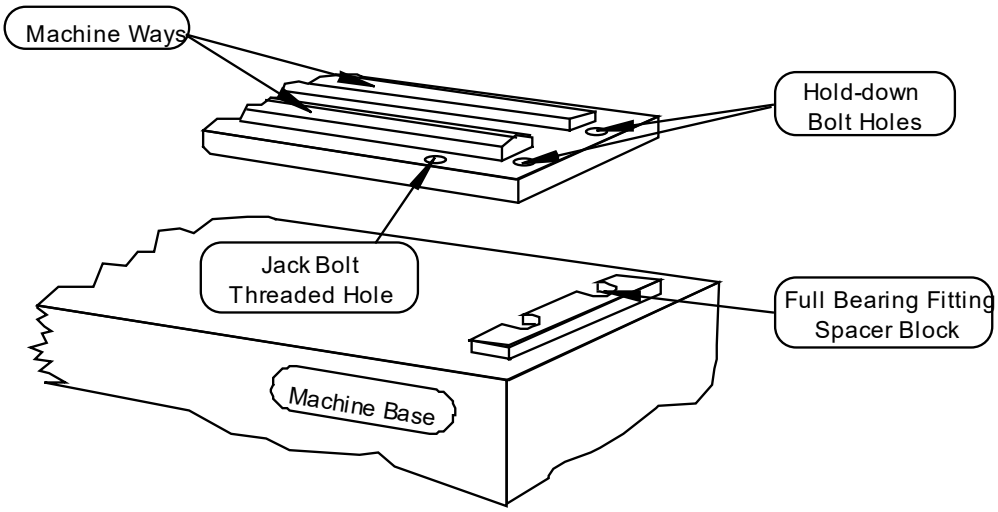

Figure No. 2 Full Bearing fitting spacer blocks and way base jack bolts

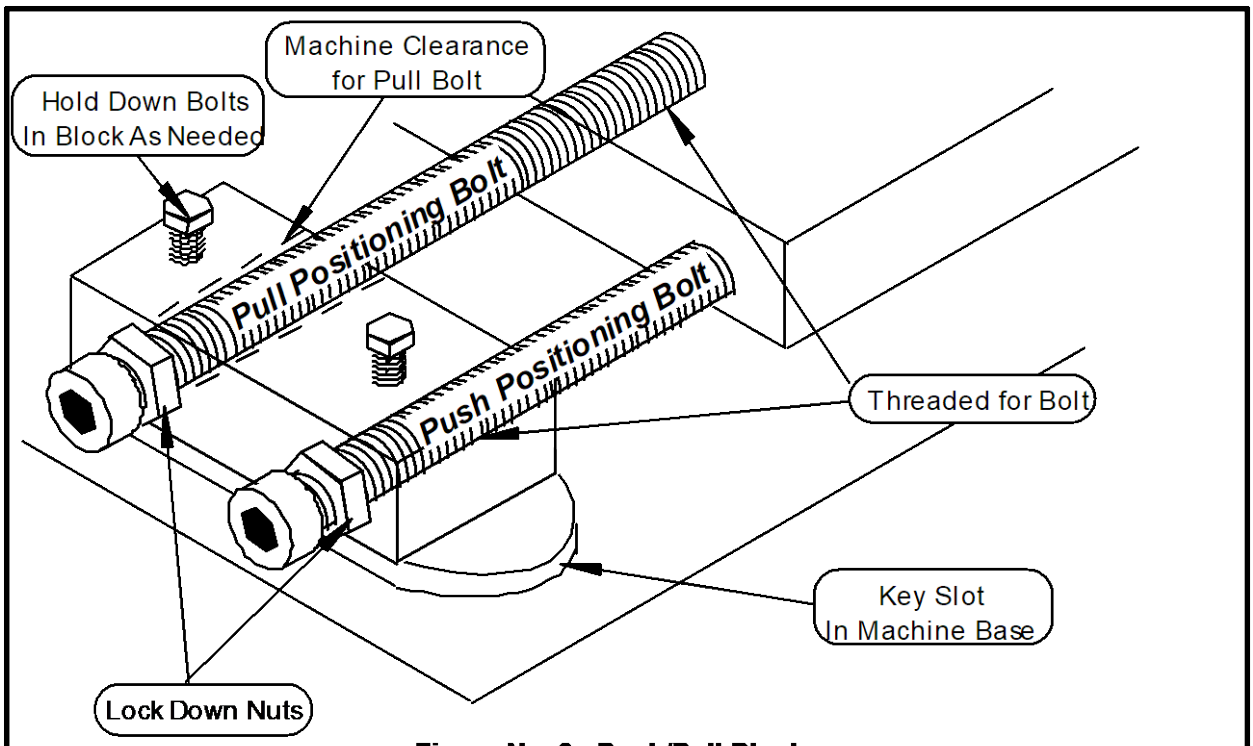

Figure No. 3 Push/Pull Block

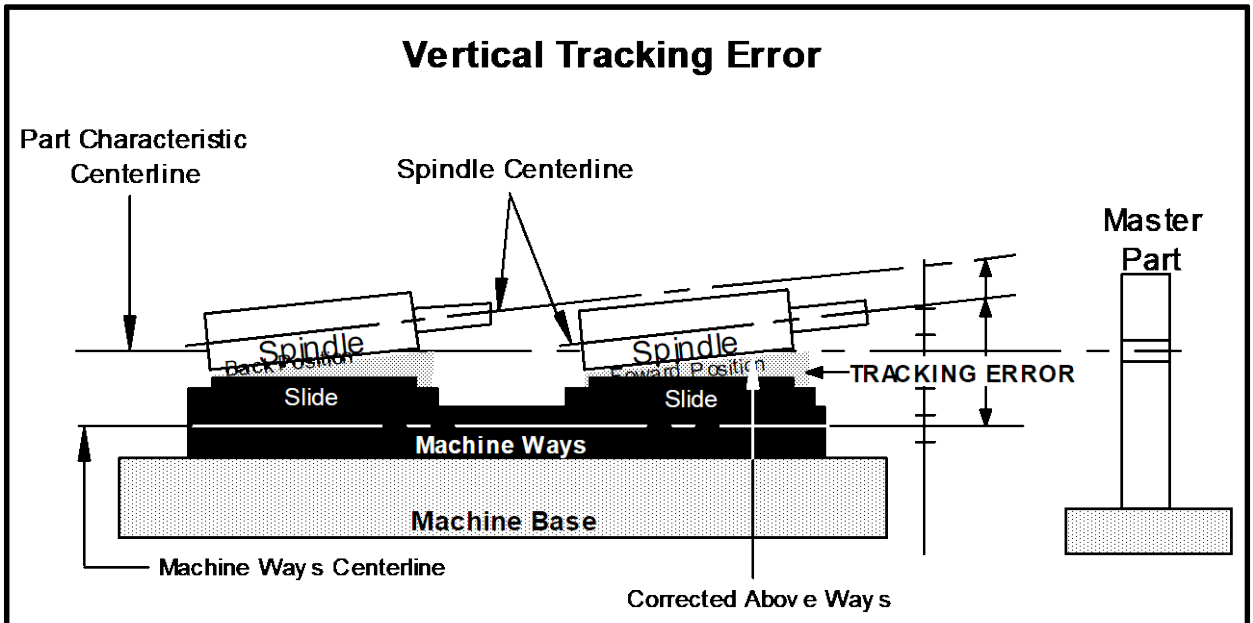

Figure No. 4 Machine Tool Alignment Geometry

Vertical Angular Error

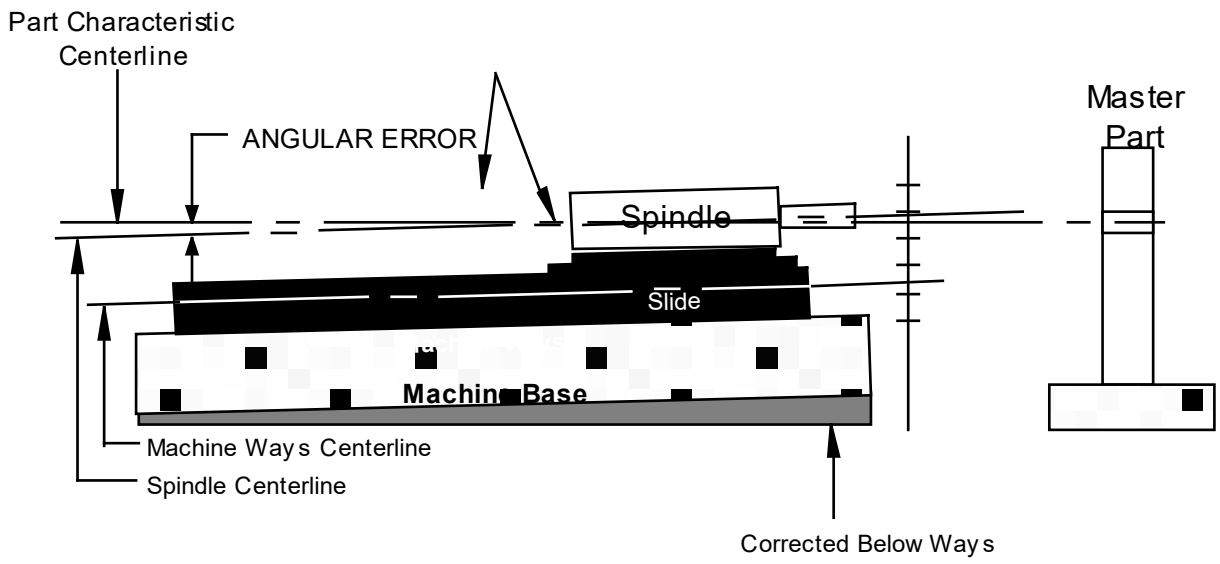

Figure No. 5 Machine Tool Alignment Geometry

Vertical Position Error

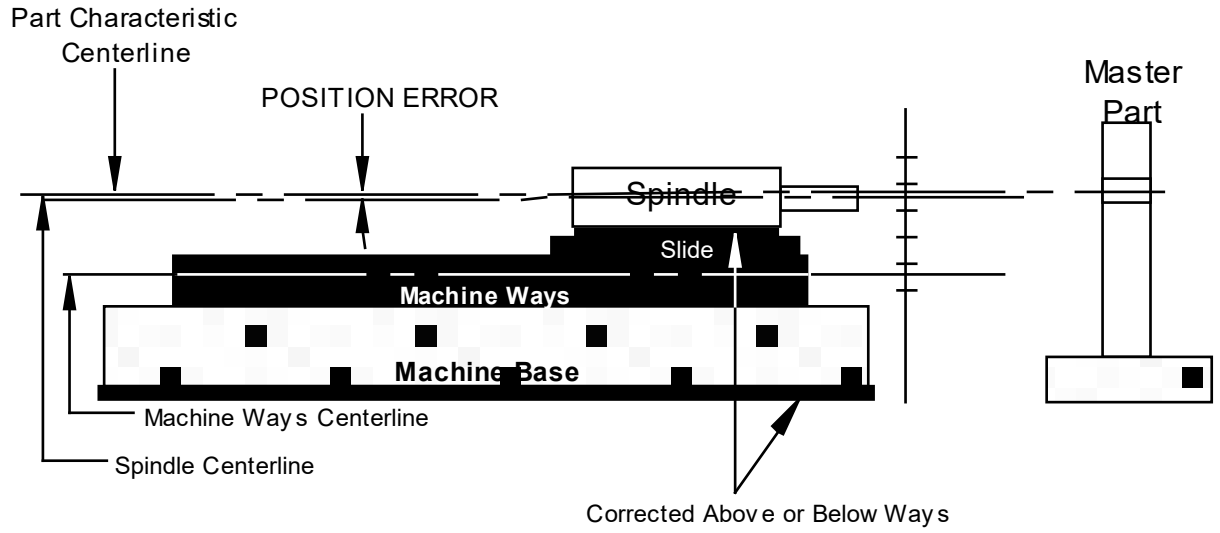

Figure No. 6 Machine Tool Alignment Geometry

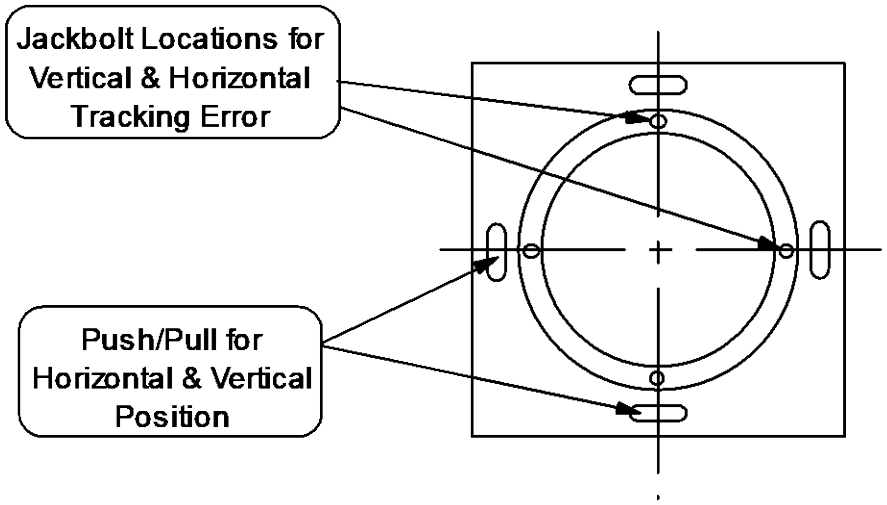

Figure 7 Flange Mounted Spindle

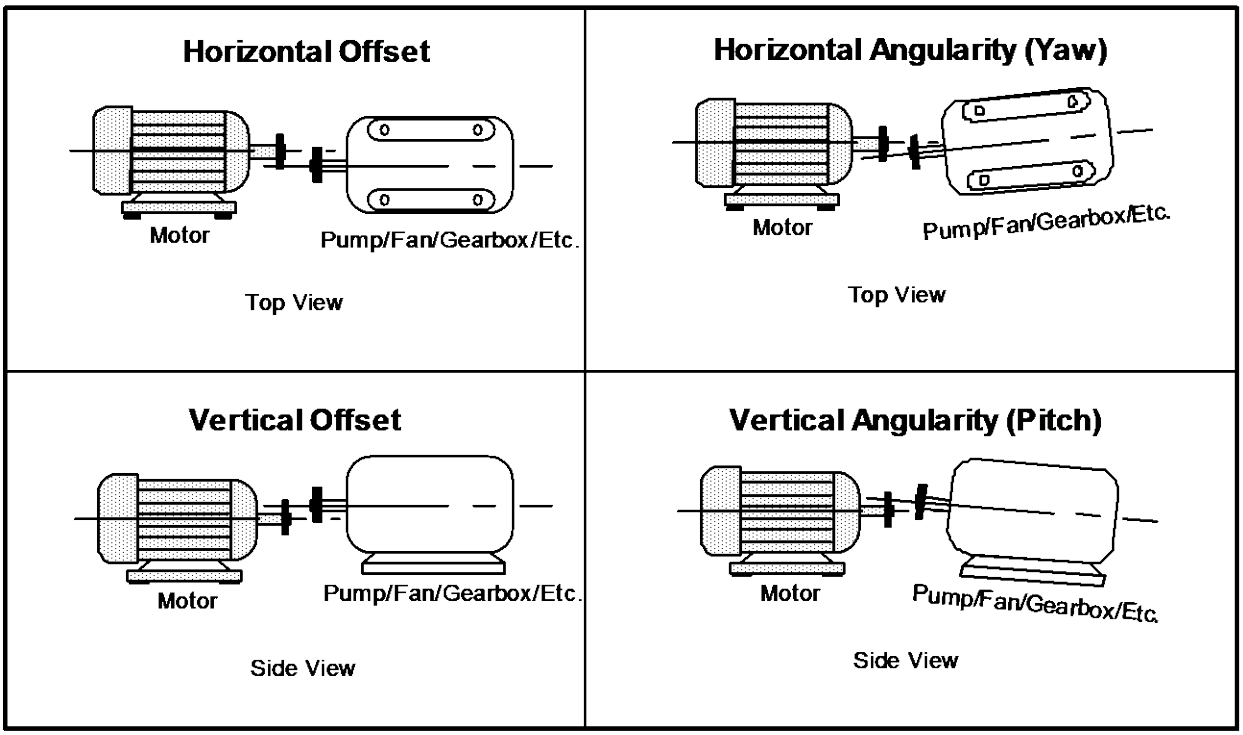

Figure 8 Offset and Angular Misalignment

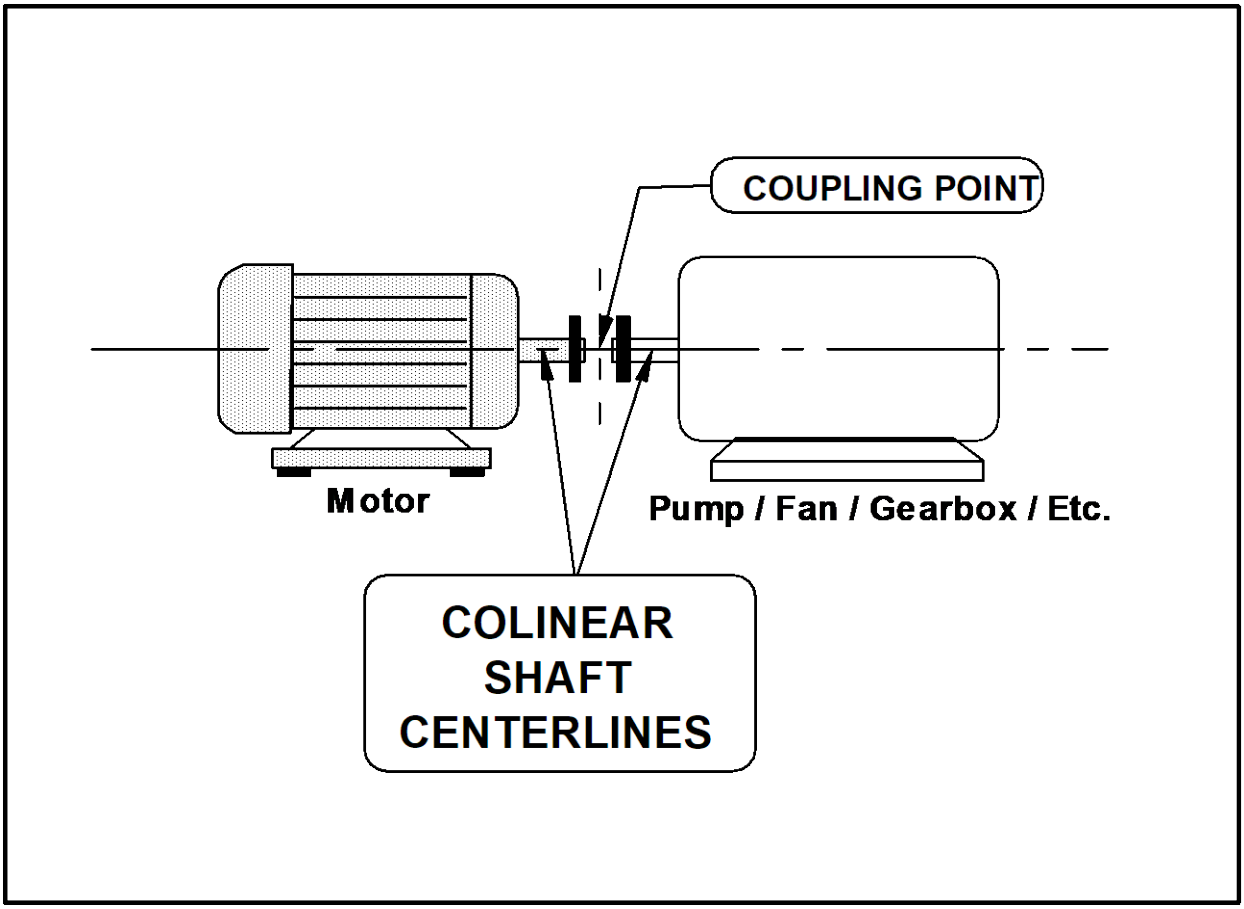

Figure 9 Coupled Shafts Alignment

The following sketches are provided for a general guideline and are not construction drawings. These bases are intended for situations where the schedule does permit the proper cure time for concrete and/or grout.

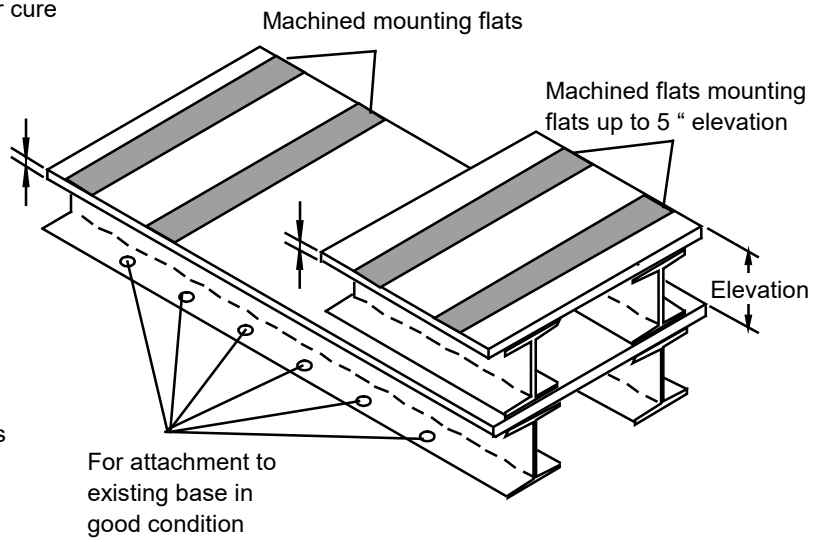

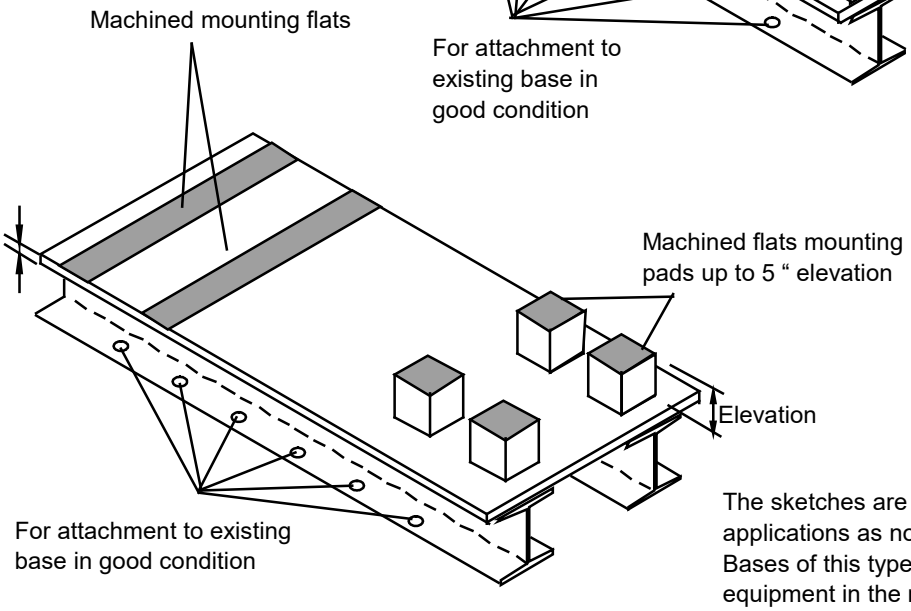

The sketches are divided into applications as noted on the sketches. Bases of this type are generally used on equipment in the range of 10 hp to 500 hp. Depending upon the speed and size, between 500 hp and 1000hp it becomes more cost effective to use the flanges of I-beams mounted cross-frame to support the machine instead of using plate.

Figure 10a Suggested Baseplate Assemblies

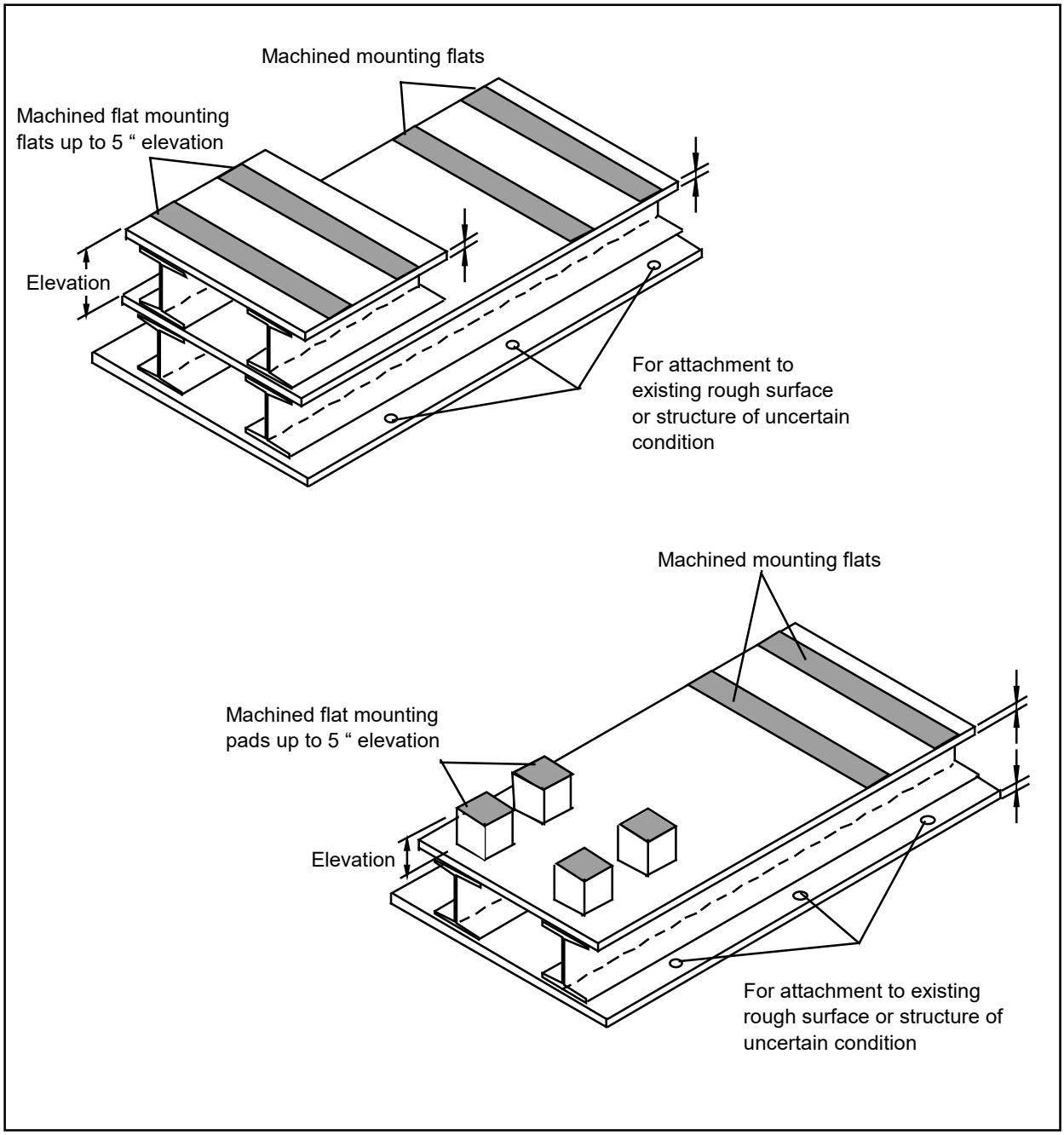

Figure 10b Suggested Baseplate Assemblies

SECTION 01 71 23

FIELD ENGINEERING AND SURVEYING

PART 1 GENERAL

See Section 00700 GENERAL TERMS AND CONDITIONS, Article 4.05 "Reference Points"

1.1 SUMMARY

Summary of Work: The Contractor shall engage a Professional Engineer of the discipline required, registered in the State of Florida, to perform engineering services for temporary facilities including the design of shoring systems, shores, earth and water retaining systems, forms, temporary erection supports, and similar items provided by the Contractor as part of its means and methods of construction.

The Contractor shall engage a Professional Surveyor and Mapper licensed in the State of Florida to perform all necessary construction layout surveys, horizontal and vertical control, routine quantity surveys, As-Built (Record) Surveys, Bathymetric Surveys and Topographic Surveys in accordance with Chapter 472.027 of the Florida Statues and Chapter 5J-17 Florida Administrative Code (FAC) and these specifications. The surveyor shall be capable of taking and providing aerial photographs using drone technology.

1.2 RELATED WORK SPECIFIED ELSEWHERE

There are other specification sections that relate to this section that are not necessarily cited herein.

1.3 SUBMITTALS

Submit the following in accordance with Section 01 33 00 SUBMITTAL PROCEDURES:

SD-03 Product Data

Scanning Methodology and Equipment

Bathymetric Survey Methodology and Equipment

Aerial Photographs

Drone

SD-05 Design Data

Shoring Systems

Earth and Water Retaining Systems

Temporary Erection Supports

SD-11 Closeout Submittals

As-built Conduit Layout

As-built Grounding System

As-built High Definition Laser Scans

As-built Survey

As-built Bathymetric Surveys

External Hard Drive

Final Surveyor's Report

Preliminary Surveyor's Report

PART 2 PRODUCTS

Not Used

PART 3 EXECUTION

3.1 CONTRACTOR'S RESPONSIBILITIES

3.1.1 Responsibilities Include

In connection with this Work, the Contractor shall, on a continuous daily basis, be responsible for:

1. Performing all construction layout survey tasks as necessary for construction and satisfactory completion of the Work.

2. Verifying benchmark elevations by running a level loop between a minimum of two (2) Project vertical control points prior to the construction layout survey or establishing Project elevation data and/or new benchmarks where necessary.

3. Completing all leveling under the supervision of a Florida licensed Professional Surveyor and Mapper. The level run shall close to within 0.03 feet times the square root of the distance in miles.

4. Performing at a minimum two (2) daily check measurements with RTK Global Positioning System (GPS) on a minimum of two (2) different Project control monuments in two (2) different satellite geometric layouts.

5. Performing a peg test as necessary on all level equipment with needed adjustments to maintain the accuracy of the instruments.

6. Keeping a record of all survey work in a survey field book in a clear, orderly, and neat manner consistent with standard surveying practices.

7. Providing aerial photographs to depict monthly progress and as required to support survey and field engineering activities. Provide this data to the District's Sharepoint site as required/requested.

8. Providing support necessary to complete the foundation mapping surveys as required. See Section 31 23 13 SUBGRADE PREPARATION for the survey requirements for mapping the foundation.

3.2 CONSTRUCTION REQUIREMENTS

3.2.1 Requirements Include

1. The Contractor's personnel performing the construction layout survey shall work under the direct supervision of a Florida licensed Professional Surveyor and Mapper.

2. The Contractor shall be solely and completely responsible for the accuracy of the line and grade of all features of the Work. Any errors or apparent discrepancies found in previous surveys, Drawings, or specifications shall be called to the attention of the District by the Contractor for correction or interpretation prior to proceeding with the Work.

3. The Contractor shall be responsible for the placement, referencing, and preservation and re-establishment (if damaged or removed) of all survey control points, whether set or found on the Project. All boundary corners (i.e. section corners, fractional section corners, similar Project survey monumentation) that may be lost, destroyed or disturbed during construction shall be carefully replaced and referenced by a Florida licensed Professional Surveyor and Mapper.

4. The supervision of the Contractor's construction surveying personnel shall be the responsibility of the Contractor; any deficient surveying layout or construction Work which may be the result of inaccuracies in construction layout survey operations or failure to report inaccuracies found in Work shall be corrected at the expense of the Contractor.

5. Station Identification: On linear elements of construction (such as roads, dam embankments, levees, canals, and similar items) the Contractor shall place temporary identifying stakes at intervals of 100 feet using four (4) foot sections of one (1) inch by four (4) inches lumber driven into the ground. The markings on the stakes shall contrast with the color of the stakes so that they are easily read from a distance of at least 50 feet. The markings on the stakes shall identify the baseline or centerline station at that location. The stakes may be placed at an offset to the baseline or centerline.

6. In order to expedite the commencement of construction operations, the construction layout survey operation may commence prior to the issuance of the Notice to Proceed. The Contractor shall obtain written approval of the District prior to commencing construction layout survey.

3.3 SURVEY STANDARDS

If the vertical and horizontal data needs to be established at the Project Site, the Contractor shall conform to the following standards:

3.3.1 Vertical data:

1. All vertical data shall be collected and displayed in North American Vertical Datum 88 (NAVD 88), including all High Definition Laser Scan data (i.e. point cloud) and any data presented in a conventional drawing format. All Vertical elevation control level runs shall start and end on National Geodetic Survey (NGS) Second Order or higher District approved vertical control monuments. The Contractor shall use a minimum of two (2) different NGS Second Order or District approved published benchmarks that are a minimum of one-half mile apart. The level run(s) between monuments must close on each other. If the monuments do not close on each other the surveyor shall re-do the level runs or use another NGS monument until the two (2) monuments used in the level run close. The level run shall close to within 0.03 feet times the square root of the distance in miles.

2. All Vertical elevation control level runs shall start and end on National Geodetic Survey (NGS) Second Order or higher District approved vertical control monuments.

3. All new Water Control Structures shall require at a minimum one (1) new Site benchmark to be set if one does not exist. A survey disk (supplied by the District) stamped with the Site designation or District approved alternative shall be permanently grouted into the water control structure provided it is on a portion of the structure that does not have an expansion joint. The marker for the benchmark can be obtained from the District Project Manager (PM). The Contractor shall only stamp or engrave the benchmark identification and not the elevation. If a NGS Class "B" mark is set, the survey disk is not required and the designation shall be stamped on the benchmark cap.

4. If elevations need to be converted to NGVD 29, use the CORPSCON 6.0.1 with the Corps of Engineers, South Atlantic Division's "vertcon 05.txt" file added.

5. A District benchmark description sheet shall be completed for each benchmark established (set) for use in the Project. A District benchmark description sheet shall be requested; if applicable, from the District PM at the pre-construction meeting.

6. Allow District access to all survey markers, total station and base station survey equipment and data.

3.3.2 Horizontal Data (State Plane Coordinates)

All horizontal data shall be collected in and based on the North American Datum (NAD 1983/2007) adjustment or higher, including all As-built High Definition Laser Scan data (i.e. point cloud) and any data presented in a conventional drawing format. Horizontal coordinate control shall be established from existing NGS or District approved Second Order control or higher in the area by using a minimum of conventional NGS Third Order field observation procedures. All horizontal work shall be done in the same horizontal adjustment (no mixing of the adjustments). Once the horizontal datum has been established it shall not change for the life of the project.

3.3.3 Cross-Sections

Provide a certified copy, in accordance with paragraph RECORDS AND SUBMITTALS below, of field measured cross-sections of the final construction prepared by a Professional Surveyor and Mapper licensed in the State of Florida measured at the same stations as the detailed cross-sections shown on the Drawings. Documentation of the as-built conditions in the new canals will be done using bathymetric scanning technics. Cross sections of the new canals will not be required. The following are the allowable vertical tolerances:

1. Roads:

   a. Paved surfaces: +/- 0.05 feet.

   b. Unpaved surfaces: +/- 0.10 feet.

2. Embankments (dams/levees):

   a. Paved surfaces: +/- 0.05 feet.

   b. Unpaved surfaces: +/- 0.10 feet.

3. Canals:

   a. Below water line: +/- 0.25 feet.

   b. Above waterline: +/- 0.10 feet.

4. Water Control Structures including top, invert, gate opening widths and lengths:

   a. Hard surfaces above water: +/- 0.05 feet.

   b. Hard surfaces below water: +/- 0.10 feet.

3.3.4 Staff Gauges

The Contractor shall install staff gauges in accordance with Section 33 30 20 STAFF GAUGES.

3.4 RECORDS AND SUBMITTALS

1. Provide the District a copy of the shoring systems, earth and water retaining systems and temporary erection supports designs, as needed for the project, signed and sealed by the Florida registered Professional Engineer in charge of the Project.

2. Provide District one (1) copy of the Preliminary Surveyor's Report (MS Word 2007), and two (2) copies of the Final Surveyor's Report signed, sealed and certified Surveyor's Report to the District.

   a. At a minimum, the report shall include: an overall Project description, location sketches, field notes, equipment used, photographs and a horizontal data (NAD 1983/2007 state plane coordinate (RTK)) on each new bench mark (if applicable).

b. A CD containing: Surveyor's firm name and logo, Surveyor's Report, digital photographs, benchmark description sheets and any other associated data.

3. Provide the District with the product data of the drone to be used in obtaining the aerial photographs.

3.4.1 Records/As-builts

1. The Contractor shall provide one (1) set of conventional certified As-built Survey, As-built Grounding System, and As-built Conduit Layout overlaid on the Drawings.

2. The Contractor shall provide a single PDF file with all data attached to that file and bookmark the As-built.

3. The Contractor shall provide single AutoCAD (version 2010 or later) digital files for each of the certified hard copies.

3.4.2 High Definition Laser Scans for Water Control Structure(s):

1. The Contractor shall provide As-built High Definition Laser Scans of, each of the water control structures in the Project. The scans shall be completed in the "high density" setting only. Multiple scans of the structures shall be required to record all necessary information. Files shall be cleaned and all "noise" and extraneous information removed from the files. All structures shall be scanned while dry. Internal and external surfaces of the structure (except the bottom) shall be included in the survey scans.

2. The Contractor shall provide all post-processing and technical support required to register and rectify each structure's scanned data.

3. Prior to performing the surveys the Contractor shall submit to the District for approval, the scanning methodology and equipment to be utilized to perform each survey scan as well as the data format of the survey to be delivered to the District. Once approved in writing the Contractor may proceed.

3.4.3 Bathymetric Survey of New Canals

1. Prior to performing the canal as-built surveys the Contractor shall submit to the District for approval, the bathymetric survey methodology and equipment to be used in surveying the canals. Once approved in writing the Contractor may proceed.

2. Contractor shall provide as-built bathymetric surveys of the new or modified canals including but not limited to the Townsend Canal, Perimeter Canal and the Intake Canal. The survey shall be a 3D model of the canals and shall include the canal contours up to the normal water level.

3.4.4 Data Storage Requirements

The Contractor shall provide one external hard drive containing all registered point clouds (including a raw data file and the cleaned file) for

each structure in the proper file format including all data produced for this work.

-- End of Section --

SECTION 01 73 29

CUTTING AND PATCHING

PART 1 GENERAL

1.1 SUMMARY

Summary of Work: "Cutting and patching" includes cutting into existing construction to provide for the installation or performance of other work and all subsequent fitting and patching required to restore surfaces to their original condition.

A. Cutting and patching is performed for coordination of the Work, to uncover work for access or inspection, to obtain samples for testing, to permit alterations to be performed or for other similar purposes.

B. Cutting and patching performed during the manufacture of products, or during the initial fabrication, erection or installation processes is not considered to be "cutting and patching" under this Section. Drilling of holes to install fasteners and similar operations are also not considered to be "cutting and patching".

1.2 RELATED REQUIREMENTS

Refer to other Sections of these specifications and the Drawings for specific cutting and patching requirements and limitations applicable to individual units of Work.

A. Unless otherwise specified, requirements of this Section also apply to mechanical and electrical work.

B. Refer to the mechanical and electrical sections for additional requirements and limitations on cutting and patching of mechanical and electrical work.

1.3 SUBMITTALS

SD-05 Design Data

Structural Details and Calculations

Cutting and Patching Procedures

1.4 SUBMITTAL REQUIREMENTS

Procedural Proposal for Cutting and Patching: Where prior approval of cutting and patching is required, submit proposed cutting and patching procedures for this Work well in advance of the time the Work will be performed and request approval to proceed. Include the following information, as applicable, in the submittal:

1. Describe nature of the cutting and patching and how it is to be performed, indicating why cutting and patching cannot be avoided.

2. Describe the anticipated results of the cutting and patching in terms of changes to existing work, including structural, operational and visual changes as well as other significant elements.

3. List products to be used and firms that will perform the cutting and patching.

4. Give dates when the cutting and patching is expected to be performed.

5. List utilities that will be disturbed or otherwise be affected by the cutting and patching, including those that will be relocated and those that will be out-of-service temporarily.

   a. Indicate how long utility service will be disrupted.

6. Where cutting and patching of structural work involves the addition of reinforcement, submit structural details and calculations, prepared by a Professional Engineer licensed in the State of Florida, to show how that reinforcement is integrated with the original structure to satisfy all applicable requirements. Submit cutting and patching procedures for review and approal.

7. Approval by the District to proceed with cutting and patching work does not waive the District's right to later require complete removal and replacement of work found to be cut and patched in an unsatisfactory manner.

1.5 QUALITY ASSURANCE

1.5.1 Requirements for Structural Work

Do not cut and patch structural work in a manner that would result in a reduction of the load-carrying capacity or load-deflection ratio.

1.5.2 Operational and Safety Limitations

Do not cut and patch operational elements or safety related components in a manner that would result in a reduction of their capacity to perform in the manner intended, including energy performance, or that would result in increased maintenance, or decreased operational life or decreased safety.

1.5.3 Visual Requirements

Do not cut and patch work exposed on the building's exterior or in its occupied spaces, in a manner that would, in the District's opinion, result in lessening the building's aesthetic qualities.

1. Do not cut and patch work in a manner that would result in substantial visual evidence of cut and patch work.

2. Remove and replace work judged by the District to be cut and patched in a visually unsatisfactory manner.

3. Retain the original installer or fabricator if possible, or another recognized experienced and specialized firm for cutting and patching.

PART 2 PRODUCTS

2.1 MATERIALS

A. General: Except as otherwise indicated, or as directed by the District, use materials for cutting and patching that are identical to the existing materials.

B. If identical materials are not available or cannot be used, use materials that match existing adjacent surfaces to the fullest extent possible with regard to visual effect.

C. Use materials for cutting and patching that will result in equal-or-better performance characteristics.

PART 3 EXECUTION

3.1 INSPECTION

A. Before cutting, examine the surfaces to be cut and patched and the conditions under which the cutting and patching is to be performed. If unsafe or otherwise unsatisfactory conditions are encountered, take corrective action before proceeding with the cutting and patching.

B. Coordinate layout of the cutting and patching and resolve potential conflicts before proceeding with the cutting and patching.

3.2 PREPARATION

3.2.1 Temporary Support

To prevent failure, provide temporary support of work to be cut.

3.2.2 Protection

Protect other work during cutting and patching to prevent damage. Provide protection from adverse weather conditions for that part of the Project that may be exposed during cutting and patching operations.

1. Avoid interference with use of adjacent facilities or interruption of free passage to adjacent facilities.

2. Take precautions not to cut existing pipes, conduits or ducts currently in service, but scheduled to be relocated until provisions have been made to by-pass them. Coordinate with the DISTRICT.

3.3 PERFORMANCE

3.3.1 General

Employ skilled workmen to perform cutting and patching work.

3.3.2 Cutting

Perform the cutting using methods that are least likely to damage work to be retained or adjoining work. Where possible, review proposed procedures with

the original installer; comply with the original installer's recommendations.

1. General: Use hand or small power tools designed for sawing or grinding, not hammering and chopping, where cutting is required. Use of gasoline-powered tools will not be permitted in enclosed spaces.

2. Cut through concrete and masonry using a cutting machine such as a carborundum saw or core drill to insure a neat hole.

3. Cut holes and slots neatly to size required with minimum disturbance of adjacent work.

4. Cut or drill from the exposed or finished side into concealed surfaces to avoid marring existing finished surfaces.

5. Temporarily cover openings when not in use.

By-pass utility services such as pipe and conduit, before cutting, where such utility services are shown or required to be removed, relocated or abandoned.

Cut off conduit and pipe in walls or partitions to be removed. After by-pass and cutting, cap, valve or plug and seal tight the remaining portion of pipe and conduit to prevent entrance of moisture or other foreign matter.

3.3.3 Patching

Patch with seams which are durable and as invisible as possible. Comply with specified tolerances for the Work.

1. Inspect and test patched areas to demonstrate the integrity of the Work.

2. Restore exposed finishes of patched areas and where necessary extend finish restoration into retained adjoining work in a manner which will eliminate evidence of patching and refinishing.

3. Patch and repair floor and wall surfaces to provide an even surface of uniform color and appearance where removal of walls or partitions extends from one finished area into another finished area.

4. If necessary to achieve uniform color and appearance, remove existing floor and wall coverings and replace with new materials.

5. Extend the final paint coat over the entire unbroken surface containing the patch, after the patched area has received prime and base coats where the patch occurs in a smooth painted surface.

6. Patch, repair or re-hang existing ceilings as necessary to provide an even plane surface of uniform appearance.

3.4 CLEANING

A. Thoroughly clean areas and spaces where work is performed or used as access to work. Remove completely all excess paint, mortar, oils, putty and items of similar nature.

B. Thoroughly clean piping, conduit and similar features before painting or other finishing is applied.

C. Restore damaged pipe covering to its original condition.

-- End of Section --

SECTION 01 75 15

START UP/CHECK OUT/MANUFACTURER'S FIELD SERVICES FOR OWNER FURNISHED EQUIPMENT

PART 1 GENERAL

1.1 SCOPE

1.1.1 Summary of Work

This Section includes requirements of the Contractor in relation to services to be performed at the Site by the Manufacturers of Owner Furnished Equipment, with regard to installation, erection, start-up, and testing of Owner Furnished equipment. In general, for the equipment identified in the Supplemental Conditions that the Owner (District) is providing, the Contractor must coordinate and integrate delivery, installation, testing and Commissioning into the Project as though it were Contractor supplied.

Where any field service is provided by the Manufacturers of Owner Furnished equipment, as identified in the Supplementary Conditions, the Contractor shall not perform any Work related to the installation or operation of such Equipment and Materials without direct observation and guidance of the Manufacturer's or Supplier s field personnel unless District concurs otherwise.

The Contractor is required to coordinate the receipt of this material and equipment with his overall construction schedule.

The Contractor will be responsible for off-loading upon delivery to the Site, assembly, installation, storage (in accordance with Manufacturer s recommendations), staging, security, scheduling, handling, start up, testing and Commissioning of Owner Furnished Equipment. The Owner furnished equipment listed in the Supplemental Conditions include an additional responsibility for the Contractor to load, pickup and transport some owner furnished equipment.

The Contractor will assume responsible custody upon delivery, as if it were Contractor furnished materials and equipment.

The Contractor will be responsible for requesting data on Owner Furnished equipment in a timely manner to comply with test plan requirements in Section 01 87 02 EQUIPMENT AND SYSTEM PERFORMANCE AND OPERATIONAL TESTING.

1.1.2 Related Work Specified Elsewhere

1. Section 01 33 00 SUBMITTAL PROCEDURES

2. Section 01 75 16 START-UP/CHECK-OUT/MANUFACTURERS FIELD TESTING FOR CONTRACTOR FURNISHED EQUIPMENT

3. Section 01 87 02 - EQUIPMENT AND SYSTEM PERFORMANCE AND OPERATIONAL TESTING

4. Section 01 91 00 COMMISSIONING

5. Section 01 91 10 - TRAINING

1.2 SERVICES REQUIRED

A. The Contractor shall coordinate with the Manufacturer s representatives on Owner Furnished equipment to create a viable test plan for the system in which each component or piece of equipment is to be installed. Submittal of a testing plan shall be included as a milestone in the construction schedule per Section 01 87 02 EQUIPMENT AND SYSTEM PERFORMANCE AND OPERATIONAL TESTING. The testing plan at a minimum shall include components to be started/checked out, personnel required, details of procedures to be used, and safeguards to be employed.

PART 2 PRODUCTS

Specified in applicable Sections.

PART 3 EXECUTION

3.1 OPERATION AND TESTING

3.1.1 Placing Equipment in Operation

1. Place all Owner Furnished Equipment and Materials installed under this Contract into successful operation according to instructions of the Supplier, Manufacturer, or field representative, including making all required adjustments, tests, operation checks, and the following:

a. Cleaning, sounding, blowing-out, and flushing of lubricating oil and water systems, and other pipelines.

b. Lubrication, fuels, supplies, power, consumables, water, and labor to be supplied by the Contractor for the duration of start-up and testing, and until substantial completion of the Work.

c. Tests of lubrication system safety interlocks and system performance.

d. Final alignment checks and measurements made under observation of the District. Alignment checks shall include opening connections, if required, to ensure there are no abnormal stresses on equipment from pipes, ducts, or other attachments. Alignment shall be within tolerances specified by the Manufacturer, and measurements shall be recorded and furnished to the District.

e. Motor rotation checks before connecting couplings.

f. Inspection of sleeve bearings for adequate contact.

g. Checking of anchor-bolt tensions, grout and shims. Tighten anchor bolts with calibrated torque wrenches using care not to over stress bolts.

2. After "run-in" and acceptance of alignment, affix major equipment as specified and allowed for in Contract Documents.

3. Record all above operations on forms acceptable to the District.

4. Furnish all necessary attendants and personnel as part of the Work to accomplish the above operations until such time as individual items, systems, equipment, or sections of the plant are acceptable for operation by District.

5. Provide attendants on a continuous basis as required to complete events without interruption once they have been started.

6. The Contractor shall provide labor, lubricants and fuels and other consumables sufficient for testing and placing equipment in operation.

3.1.2 Performance Tests

1. Equipment and Materials Furnished by the Owner:

a. The District may conduct acceptance tests after installation to determine if the Equipment and Materials installed as part of the Work perform in accordance with Contract Documents. Final acceptance of Equipment and Materials or services rendered by the Contractor will be based on acceptable results of such tests and certification, by the Manufacturer, that the equipment is installed and operating in accordance with their recommendations.

b. No tests will be conducted on Equipment and Materials for which the Manufacturer's Field Service is specified unless the Manufacturer's Field Representative is present and declares in writing that the Equipment and Materials are ready for such test.

c. The tests will be made as set forth in the Contract Documents unless the interested parties mutually agree upon some other manner of testing.

d. The Contractor must make himself aware of pre-operation procedures and required testing of Owner Furnished Equipment, in order to comply with Section 01 87 02 EQUIPMENT AND SYSTEM PERFORMANCE AND OPERATIONAL TESTING.

-- End of Section --

SECTION 01 75 16

START-UP/CHECK-OUT/MANUFACTURER'S FIELD SERVICES FOR CONTRACTOR FURNISHED EQUIPMENT

PART 1 GENERAL

1.1 SCOPE

1.1.1 Summary of Work

This Section includes requirements of the Contractor in relation to services to be performed at the Site by the Manufacturers and Suppliers of Contractor Furnished equipment, regarding the erection, start-up, and testing of Contractor Furnished equipment.

1.1.2 Related Work Specified Elsewhere

1. SECTION 01 33 00 SUBMITTALS PROCEDURES

1.2 SUBMITTALS

All submittals shall be in accordance with Section 01 33 00 SUBMITTAL PROCEDURES.

SD-08 Manufacturer's Instructions

Equipment Start-up/Check-out Plan

1.2.1 SERVICES REQUIRED

The following services are to be provided for all Contractor Furnished Equipment and Materials under this Contract:

1. Provide the services of Qualified Field personnel from the Manufacturer(s) or Supplier(s) of Equipment and Materials furnished by the Contractor and installed under this Contract, and perform all required Manufacturer's Field Services. Qualified field personnel shall be certified by the Manufacturer of the specific product or system as having the necessary knowledge and experience to perform the required Field Services.

2. Where such services are specified, the Contractor shall not perform any Work related to the installation or operation of the Equipment and Materials furnished and installed under this Contract without direct supervision and guidance from the Manufacturer's or Supplier's Qualified Field personnel unless the District concurs otherwise, in writing.

3. Where required, the Manufacturer's or Supplier's Qualified Field personnel shall perform the following:

   a. Observe the erection, installation, start-up and testing of equipment.

b. Instruct and guide the Contractor in proper equipment installation, start-up, testing and operation procedures.

c. Supervise the initial start-up, operational check, and any required adjustments of the equipment.

d. Instruct the District's designated personnel in proper operation and maintenance of all Contractor Furnished equipment.

e. Furnish a written report, in accordance with Section 01 33 00, to the District covering all Work done at least once each week and when Work on each item of equipment or system is completed.

4. The Contractor shall provide at least five (5) working days advance notice prior to the arrival of any Manufacturer's and/or Supplier's Qualified Field personnel at the Site.

The Contractor shall submit an equipment start-up/check-out plan (Plan) to the District for review prior to installation and delivery of all equipment. The Plan at a minimum shall include the equipment and components to be started/checked-out/tested, start-up/check-out/testing duration, personnel required, checklists and details of procedures to be used for each piece of equipment.

PART 2 PRODUCTS

Specified in applicable Sections

PART 3 EXECUTION

3.1 OPERATION AND TESTING

3.1.1 Placing Equipment in Operation

1. The Contractor shall place all Equipment and Materials installed under this Contract into successful operation according to instructions of the Supplier, Manufacturer, or their Qualified Field personnel, including making all required adjustments, tests, operation checks, plus the following:

a. Cleaning, sounding, blowing-out, and flushing of lubricating oil and water systems, and other pipelines.

b. All required lubrication, fuels, supplies, power, consumables, water, and labor for the duration of start-up and testing, and until Substantial Completion of the Work.

c. Tests of lubrication system safety interlocks and system performance.

d. Final alignment checks and measurements made under observation of the District. Alignment checks shall include opening connections, if required, to ensure there are no abnormal stresses on equipment from pipes, ducts, or other attachments. Alignment shall be within tolerances specified by the Manufacturer, and the measurements shall be recorded and furnished to the District.

e. Motor rotation checks before connecting couplings.

f. Inspection of sleeve bearings for adequate contact.

g. Checking of anchor-bolt tensions, grout and shims. Tighten all anchor bolts with calibrated torque wrenches using care not to over stress the bolts.

2. After "run-in" and acceptance of alignment, and where specified, affix major equipment in place using standard tapered dowels with jack-out nuts at the head ends to facilitate equipment removal.

3. Record and submit all of the above operations on forms acceptable to the District.

4. Provide all necessary attendants and personnel as part of the Work to accomplish the above operations until such time as individual items, systems, equipment, or sections of the Project are acceptable for operation by the District.

5. Provide attendants on a continuous basis, as required, to complete the start-up/check-out/testing procedures without interruption once they have been started.

3.1.2 Performance Tests

1. Equipment and Materials Furnished by the Contractor:

a. The District may conduct acceptance tests after installation to determine if the Equipment and Materials installed as part of the Work perform in accordance with Contract Documents. Final acceptance of Equipment and Materials will be based on the acceptable results of such tests.

b. No tests will be conducted on Equipment and Materials for which Manufacturer's Field Service is specified unless the Manufacturer's Field Representative is present and declares in writing that the Equipment and Materials are ready for testing.

c. The tests will be made as set forth in the Contract Documents unless the interested parties mutually agree upon some other manner of testing.

-- End of Section --

SECTION 01 77 10

CONTRACT CLOSEOUT

PART 1 GENERAL

1.1 SCOPE

1.1.1 Summary of Work

This Section includes administrative and procedural requirements for Contract Closeout including, but not limited to, the following:

1. Inspection procedures
2. Project record document submittal
3. Operation and maintenance manual submittal
4. Training
5. Submittal of warranties
6. Final cleaning
7. Contractor's Certification

Closeout requirements for specific construction activities are included in the appropriate Sections in DIVISIONS 1 through 46.

1.1.2 Related Work Specified Elsewhere

1. Section 01 33 00 - SUBMITTALS
2. SECTION 01 71 23 FIELD ENGINEERING AND SURVEYING
3. SECTION 01 56 05 TEMPORARY BARRIERS AND CONTROLS
4. SECTION 01 75 16 START-UP/CHECK-OUT/MANUFACTURERS FIELD SERVICES FOR CONTRACTOR FURNISHED EQUIPMENT
5. SECTION 01 87 02 EQUIPMENT AND SYSTEM PERFORMANCE AND OPERATIONAL TESTING
6. SECTION 01 91 00 COMMISSIONING

1.2 SUBSTANTIAL COMPLETION

1.2.1 Preliminary Procedures

Before requesting inspection for certification of Substantial Completion, the Contractor shall satisfy the following:

1. Submit specific warranties, workmanship bonds, maintenance agreements, final certifications, and similar documents. Submit in accordance with Section 01 33 00.

2. Obtain and submit releases enabling the District unrestricted use of the Work and access to services and utilities. Include Certificates of Occupancy (C.O.), operating certificates, and similar releases, as required.

3. Submit Record Documents, including but not limited to, maintenance manuals, Project photographs, damage or settlement surveys, Boundary surveys, all As- Built and Topographic Surveys as per Section 01 71 23 and similar record information as specified in Paragraph 1.4. All drawings shall be scanned and submitted in accordance with Section 01 33 00, and in hard copy form, 24 inch by 36 inch plan size. All other documents shall also be scanned and submitted in accordance with Section 01 33 00.

4. Provide all services and testing in accordance with Sections 01 43 27 EQUIPMENT VIBRATION TESTING AND LASER ALIGNMENT, 01 61 07EQUIPMENT ALIGNMENT, 01 75 16 START-UP/CHECK OUT/MANUFACTURER'S FIELD SERVICES FOR CONTRACTOR FURNISHED EQUIPMENT, and 01 87 02 EQUIPMENT AND SYSTEM PERFORMANCE AND OPERATIONAL TESTING, if applicable.

5. Provide all training in accordance with Section 01 91 10 TRAINING.

1.2.2 Inspection Procedures

On receipt of a request for inspection, the District will either proceed with inspection or advise the Contractor of unfilled requirements. The District will prepare the Certificate of Substantial Completion following inspection or advise the Contractor of Work that must be completed or corrected before the certificate will be issued.

1. The District will reschedule the inspection when in its opinion, the Work is substantially complete.

1.3 FINAL ACCEPTANCE

1.3.1 Preliminary Procedures

Submit certification by Contractor that Work has been completed in accordance with the Contract Documents to the knowledge of the Contractor. Before requesting final inspection, complete the following:

1. Submit the final payment request with releases and supporting documentation. Include insurance certificates for products and completed operations where required.

2. Submit a letter certifying that all items listed as part of the Certification of Substantial Completion have been completed or corrected.

3. Submit consent of surety to final payment.

4. Submit evidence of final, continuing insurance coverage complying with insurance requirements.

5. Submit Release of Liens (from the Prime, and all Subcontractors, Vendors and Suppliers).

6. Submit Maintenance Bond (if applicable).

7. The above shall be submitted in accordance with Section 01 33 00 SUBMITTALS.

8. Complete all tasks related to commissioning in accordance with Section 01 91 00 COMMISSIONING.

1.3.2 Reinspection Procedure

The District will reinspect the Work upon receipt of notice that the Work, including inspection list items from earlier inspections, has been completed.

1. Upon completion of reinspection, the District will advise the Contractor of Work that is incomplete or of obligations that have not been fulfilled but are required for final acceptance.

2. If necessary, the reinspection will be repeated.

Return all keys furnished by the District. The Contractor shall forfeit his key deposit for keys that are not returned.

1.4 RECORD DOCUMENT SUBMITTALS

1.4.1 General

Do not use record documents for construction purposes. Protect record documents from deterioration and loss in a secure location. Provide access to record documents for the District's reference during normal working hours.

1.4.2 As-Built Drawings

Maintain a clean, undamaged set of blue or black line white-prints of Drawings and Shop Drawings. Bind sets with durable-paper cover sheets; print suitable titles, dates, and other identification on the cover of each set. Mark the set to show the actual installation where the installation varies substantially from the Work as originally shown. Mark which drawing is most capable of showing conditions fully and accurately. Where Shop Drawings are used, record a cross-reference at the corresponding location on the Drawings. Give particular attention to concealed elements that would be difficult to measure and record at a later date. Call attention to each entry by drawing a "cloud" around the areas affected.

The District will make electronic copies of whatever electronic versions of the Drawings exist, available to the Contractor for As-Built purposes. The Contractor must obtain concurrence from the District as to form and content of record information provided in electronic format prior to proceeding, but in general, information similar to that noted below needs to be provided.

1. Record information concurrently with construction progress. Maintain as-built drawings on a daily basis. Make available to ~~discuss~~ District for review. Monthly pay applications require that record drawings have been updated and maintained to date.

2. Mark record sets with red erasable pencil. Mark each document "AS-BUILT DRAWINGS" in neat, large, printed letters.

3. Mark As-Built invert elevations for all water control structures, culverts, etc. Refer to Section 01 71 23 FIELD ENGINEERING AND SURVEYING for structures which require a permanent benchmark.

4. Mark new information that is important to the District that is not shown on Drawings or Shop Drawings.

5. Note related Change-Order numbers where applicable.

6. Include the following:

    a. Where Submittals (like Shop Drawings) are used for mark-up, record a cross-reference at corresponding location on Drawings.

    b. Field changes of dimension and detail.

    c. Changes made by Change Order or other Modifications.

    d. Details not on original Drawings.

    e. As-Builts shall also include a plot of the actual excavation cross-sections plotted at the same station as overlayed on top of the design cross-sections.

    f. As-Builts shall include a plot of the actual levee and embankment cross-sections plotted at the same station as overlayed on top of the design cross-sections. Refer to Section 01 71 23 FIELD ENGINEERING AND SURVEYING.

    g. Give particular attention to concealed elements that would be difficult or expensive to locate at a later date.

    h. GPS (global positioning system) coordinates of major structures using the format lat/long DD (decimal/degree) NAD83/2007 (North American Datum).

7. Record Specifications: Maintain one (1) complete copy of the Contract Documents including addenda. Include with the Contract Documents one (1) copy of other written construction documents, such as Requests for Information (RFIs), Change Orders and modifications issued in printed form during construction.

8. Mark these documents to show substantial variations in actual Work performed in comparison with the text of the Specifications and modifications.

9. Give particular attention to substitutions and selection of options and information on concealed construction that cannot otherwise be readily discerned later by direct observation.

10. Note related As-Built information and Product Data.

11. Upon completion of the Work, submit Record Specifications to the District for the District's records on CD in PDF format.

12. Include the following:

    a. Manufacturer, trade name, catalog number, and Supplier of each product and item of equipment actually installed, including optional and substitute items

    b. Changes made by Addendum, Change Order, or other Modifications

    c. Related Submittals

13. Affix the Contractor s corporate seal on the cover sheet indicating the documents within are representative of the as-built condition of the Project. The seal shall be signed by an officer of the company.

1.4.3 Record Product Data

Provide one (1) copy of each Product Data submittal. Note related Change Orders and markup of Record Documents.

1. Mark these documents to show significant variations in actual Work performed in comparison with information submitted. Include variations in products delivered to the Site and from the Manufacturer s installation instructions and recommendations.

2. Give particular attention to concealed products and portions of the Work that cannot otherwise be readily discerned later by direct observation.

1.4.4 Record Sample Submitted

Immediately prior to Substantial Completion, the Contractor shall meet with the District's personnel at the Project Site to determine which Samples are to be transmitted to the District for record purposes. Comply with the District's instructions regarding packaging, identification, and delivery to the District.

1.4.5 Miscellaneous Record Submittals

Refer to other Specification Sections for requirements of miscellaneous record keeping and submittals in connection with actual performance of the Work Immediately prior to the date or dates of Substantial Completion (unless otherwise specified), complete miscellaneous records and place in good order. Identify miscellaneous records properly, bind or file, and submit to the District for the District's records.

1.4.6 Warranties and Bonds

Submit original documents as specified in Section 00700 - GENERAL TERMS & CONDITIONS, SUPPLEMENTAL CONDITIONS, Section 01 33 00 SUBMITTALS, and technical specifications.

1.4.7 Quality Requirements

Refer to other Specification Sections for Quality Requirements and record keeping and submittals in connection with actual performance of the Work Immediately prior to the date or dates of Substantial Completion (unless otherwise specified), complete quality control records and place in good order. Identify quality control records properly, bind or file, and submit to the District for the District's records.

PART 2 PRODUCTS

Not Used

PART 3 EXECUTION

3.1 FINAL CLEANING

3.1.1 General

The General Terms & Conditions require general cleaning during construction. Regular Site cleaning is included in Section 01 56 05 TEMPORARY BARRIERS AND CONTROLS.

3.1.2 Cleaning

Employ experienced workers or professional cleaners for final cleaning. Clean each surface or unit to the condition expected in a normal, commercial building cleaning and maintenance program. Comply with Manufacturer's instructions.

1. Complete the following cleaning operations before requesting inspection for certification of Substantial Completion.

    a. Clean the Site of rubbish, litter, and other foreign substances. Rake grounds that are neither paved nor planted to a smooth, even-textured surface.

    b. Remove temporary structures, tools, equipment, supplies, and surplus materials.

    c. Remove temporary protection devices and facilities which were installed to protect previously completed Work.

3.1.3 Removal of Protection

Remove temporary protection and facilities installed for protection of the Work during construction.

3.1.4 Compliance

Comply with regulations of authorities having jurisdiction and safety standards for cleaning. Do not burn waste materials. Do not bury debris or excess materials on the District's property. Do not discharge volatile, harmful, or dangerous materials into drainage systems, surface waters or wetlands. Remove waste materials from the Site and dispose of lawfully.

1. Where extra materials of value remain after completion of associated Work, they become the District's property. Dispose of materials of no value to the District as directed by the District.

3.1.5 Repairs

1. Repair damaged protective coated surfaces.

2. Repair roads and other items damaged or deteriorated because of construction operations, including those which have been damaged, but are not located within the Project limits.

3. Restore all ground areas affected by construction operations.

4. Remove all debris, trees, stumps, etc. from reservoir footprint prior to first filling.

-- End of Section --

SECTION 01 78 05

OPERATION AND MAINTENANCE INFORMATION

PART 1 GENERAL

1.1 SCOPE

Operation and Maintenance (O&M) instructions shall be provided in accordance with this section and as required in the technical sections of this project manual. O&M information shall be provided for each maintainable piece of equipment, equipment assembly or subassembly, and material provided or modified under this contract.

O&M instructions must be submitted and accepted before on-site training may start.

1.2 TYPES OF INFORMATION REQUIRED

1.2.1 General

O&M information shall contain the names, addresses, and telephone numbers of the manufacturer, the nearest representative of the manufacturer, and the nearest supplier of the manufacturer's equipment and parts. See Section 01 33 00 for details on how to prepare and submit this data. In addition, one or more of the following items of information shall be provided as applicable.

1.2.2 Operating Instructions

Specific instructions, procedures, and illustrations shall be provided for the following phases of operations.

1.2.2.1 Safety Precautions

List personnel hazards for equipment and list safety precautions for all operating conditions.

1.2.2.2 Operator Prestart

Provide requirements to set up and prepare each system for use.

1.2.2.3 Start-Up, Shutdown, and Post Shutdown Procedures

Provide a control sequence for each of these operations.

1.2.2.4 Normal Operations

Provide control diagrams with data to explain operation and control of systems and specific equipment.

1.2.2.5 Emergency Operations

Provide emergency procedures for equipment malfunctions to permit a short period of continued operation or to shut down the equipment to prevent

further damage to systems and equipment. Include emergency shutdown instructions for fire, explosion, spills, or other foreseeable contingencies. Provide guidance on emergency operations of all utility systems including valve locations and portions of systems controlled.

1.2.2.6 Operator Service Requirements

Provide instructions for services to be performed by the operator such as lubrication, adjustments and inspection.

1.2.2.7 Environmental Conditions

Provide a list of environmental conditions (temperature, humidity, and other relevant data) which are best suited for each product or each piece of equipment and describe conditions under which equipment should not be allowed to run.

1.2.3 Preventive Maintenance

The following information shall be provided for preventive and scheduled maintenance and repair:

1.2.3.1 Lubrication Data

Provide the following lubrication data, other than instructions for lubrication in accordance with paragraph 2.B.6.

a. A table showing recommended lubricants for specific temperature ranges and applications

b. Charts with a schematic diagram of the equipment showing lubrication points, recommended types and grades of lubricants, and capacities

c. A lubrication schedule showing service interval frequency

1.2.3.2 Preventive Maintenance Plan and Schedule

Provide manufacturer's schedule for routine preventive maintenance, inspections, tests, and adjustments required to ensure proper and economical operation and to minimize corrective maintenance and repair. Provide manufacturer's projection of preventive maintenance man-hours on a daily, weekly, monthly, and annual basis including craft requirements by type of craft.

1.2.4 Corrective Maintenance

Manufacturer's recommendations shall be provided on procedures and instructions for correcting problems and making repairs.

1.2.4.1 Troubleshooting Guides and Diagnostic Techniques

Provide step-by-step procedures to promptly isolate the cause of typical malfunctions. Describe clearly why the checkout is performed and what conditions are to be sought. Identify tests or inspections and test equipment required to determine whether parts and equipment may be reused or require replacement.

1.2.4.2 Wiring Diagrams and Control Diagrams

Wiring diagrams and control diagrams shall be point-to-point drawings of wiring and control circuits, including factory-field interfaces. Provide a complete and accurate depiction of the actual job-specific wiring and control work. On diagrams, number electrical and electronic wiring and pneumatic control tubing and the terminals for each type identically to actual installation numbering.

1.2.4.3 Maintenance and Repair Procedures

Provide instructions and list tools required to restore product or equipment to proper condition or operating standards.

1.2.4.4 Removal and Replacement Instructions

Provide step-by-step procedures and list required tools and supplies for removal, replacement, disassembly, and assembly of components, assemblies, subassemblies, accessories, and attachments. Provide tolerances, dimensions, settings, and adjustments required. Instructions shall include a combination of test illustrations.

1.2.4.5 Spare Parts and Supply Lists

Provide lists of spare parts and supplies required for maintenance and repair to ensure continued service or operation without unreasonable delays. Special consideration is required for facilities at remote locations. List spare parts and supplies that have a long lead time to obtain.

1.2.4.6 Corrective Maintenance Man-Hours

Provide manufacturer's projection of corrective maintenance man-hours including craft requirements by type of craft. Corrective maintenance that requires participation of the equipment manufacturer shall be identified and tabulated separately.

1.2.5 Appendices

The following information shall be provided; include information not specified in the preceding paragraphs but pertinent to the maintenance of the product or equipment.

1.2.5.1 Parts Identification

Provide identification and coverage for all parts of each component, assembly, subassembly, and accessory of the end items subject to replacement. Include special hardware requirements, such as requirement to use high-strength bolts and nuts. Identify parts by make, model, serial number, and source of supply to allow reordering without further identification. Provide clear and legible illustrations, drawings, and exploded views to enable easy identification of the items. When illustrations omit the part numbers and description, both the illustrations and separate listing shall show the index, reference, or key number which will cross-reference the illustrated part to the listed part. Parts shown in the listings shall be grouped by components, assemblies, and subassemblies.

1.2.5.2 Warranty Information

List and explain the various warranties and include the servicing and technical precautions prescribed by the manufacturers or contract documents to keep warranties in force.

1.2.5.3 Personnel Training Requirements

Provide information available from the manufacturers to use in training designated personnel to operate and maintain the equipment and systems properly.

1.2.5.4 Testing Equipment and Special Tool Information

Provide information on test equipment required to perform specified tests and on special tools needed for the operation, maintenance, and repair of components.

1.3 TRANSMITTAL PROCEDURE

A. Unless otherwise specified, O&M manuals, information, and data shall be transmitted in accordance with Section 01 33 00. Only complete sets of O&M instructions will be reviewed for acceptance.

B. Three copies of the specified O&M information shall be provided. For ease of identification, each manufacturer's brochure and manual shall be appropriately labeled with the equipment name and equipment numbers it appears in the project manual. The information shall be organized in the binders in numerical order by the equipment numbers assigned in the project manual. The binders shall be provided with a table of contents and tab sheets to permit easy location of desired information. Binders shall be 3-inch, D-ring, presentation type with locking mechanism and clear view vinyl cover for insertion of graphic identifying contents of binder.

C. If manufacturers' standard brochures and manuals are used to describe O&M procedures, such brochures and manuals shall be modified to reflect only the model or series of equipment used on this project. Extraneous material shall be crossed out neatly or otherwise annotated or eliminated.

1.4 PAYMENT

Acceptable O&M information for the project must be delivered to the District prior to the scheduled date of start-up and testing of the respective features of work. Progress payments for work may be reduced until the specified acceptable O&M information has been delivered to the District.

1.5 FIELD CHANGES

Following the acceptable installation and operation of an equipment item, the item's instructions and procedures shall be modified and supplemented by the Contractor to reflect any field changes or information requiring field date.

PART 2 PRODUCTS

Operation and Maintenance Manuals are to be provided, as appropriate and as identified in the specification sections.

PART 3 EXECUTION

Not used

-- End of Section --

SECTION 01 87 02

EQUIPMENT AND SYSTEM PERFORMANCE AND OPERATIONAL TESTING

PART 1 GENERAL

1.1 SCOPE

1.1.1 Summary of Work

This Section contains requirements for the Contractor in documenting testing work required under this Contract. In addition, this Section contains requirements for the Contractor during installed performance testing of all mechanical, electrical, instrumentation, and Heating, Ventilation, and Air Conditioning (HVAC) equipment and systems, including structures for watertight construction, provided under this Contract and all equipment furnished by the District. This Section supplements but does not supersede specific testing requirements found elsewhere in this Contract.

1.1.2 Related Work Specified Elsewhere

1. SECTION 01 33 00 SUBMITTALS

2. SECTION 01 91 00 COMMISSIONING

1.2 APPLICABLE STANDARDS AND PUBLICATIONS

1.2.1 Standards or Codes

The edition of the standards of the organizations listed below in effect at the time of the advertisement for bids form a part of this specification to the extent referenced. In the case of a conflict between the requirements of this Section and those of the listed document, the requirements of this Section shall prevail.

ASME INTERNATIONAL (ASME)

ASME B40.1	Standard for Pressure Gauges and Gauge Attachments

ASTM INTERNATIONAL (ASTM)

ASTM E77	Standard Test Method for Inspection and Verification of Thermometers

AMERICAN SOCIETY OF HEATING, REFRIGERATING, AND AIR-CONDITIONING ENGINEERS (ASHRAE)

ASHRAE 41.8 Standard Methods of Measurement of Flow of Gas

1.2.2 Dye Dilution

Flow Measurement in Open Channels and Closed Conduits

1.2.3 U.S. Department of Commerce

National Bureau of Standards: Calibration Method, Vol. 1

U.S. GEOLOGICAL SURVEY (USGS)

Techniques of Water-Resources Investigations of the United States Geological Survey: Measurement of Discharge Using Tracers

1.3 QUALITY REQUIREMENTS

1.3.1 Contractor's Quality Control Manager (Startup & Commissioning Specialist)

The Contractor shall provide a qualified operations specialist as Quality Control Startup & Commissioning Specialist to manage, coordinate, and supervise the Contractor's quality control program. The Quality Control Startup & Commissioning Specialist shall have at least ten (10) years of total experience, or experience on at least five (5) separate projects, in managing the start-up commissioning of mechanical, electrical, instrumentation, HVAC, and piping systems. Startup & Commissioning Specialists shall have equivalent experience in the operation and maintenance of diesel engines, right-angle gear reducers, large drainage pumps, and standby engine generators. The Contractor's Quality Control Startup & Commissioning Specialist shall not be responsible for or be assigned to perform any other duties on this project beyond those of the Quality Control Startup & Commissioning Specialist. The quality control program may include, but not be limited to the following:

1. A testing plan ~~and~~ with checklists setting forth the sequence in which all testing work required under this Contract will be implemented

2. A documentation program to record the results of all equipment and system tests

3. An installed performance testing program for all mechanical, electrical, instrumentation, and HVAC equipment and systems installed under this Contract

4. A calibration program for all instruments, meters, monitors, gages, and thermometers installed under this Contract

5. A calibration program for all instruments, gages, meters, and thermometers used for determining the performance of equipment and systems installed under this Contract

6. A testing schedule conforming to the requirements specified in paragraph 01 61 03-2.2 C

For the purposes of this Section, a system shall include all items of equipment, devices and appurtenances connected in such a fashion as their operation or function complements, protects or controls the operation or function of the others. The Contractor's Quality Control Startup & Commissioning Specialist shall coordinate the activities of all Subcontractors and suppliers for equipment and materials supplied by both the Contractor and the District to implement the requirements of this Section.

Responsibilities of the Contract Quality Control Startup & Commissioning Specialist for the Project are identified in Section 01 45 00.00 10.

1.4 CALIBRATION

1. All test equipment (gages, meters, thermometers, analysis instruments, and other equipment) used for calibrating or verifying the performance of equipment installed under this Contract shall be calibrated to within plus or minus two (2) percent of actual value at full scale. Test equipment employed for individual test runs shall be selected so that expected values as indicated by the detailed performance specifications will fall between 60 and 85 percent of full scale. Pressure gages shall be calibrated in accordance with ANSI/ASME B40.1. Thermometers shall be calibrated in accordance with ASTM E77 and shall be furnished with a certified calibration curve.

2. Liquid flow meters, including all open channel flow meters and all meters installed in pipelines with diameters greater than two (2) inches shall be calibrated in situ using either the total count or dye dilution methods. Gas flow meters installed in piping systems with diameters greater than six (6) inches shall be calibrated in situ using the pitot tube velocity averaging method. Flow meter calibration work shall be performed by individuals skilled in the techniques to be employed. Calibration tests for flow metering systems shall be performed over a range of not less than ten (10) percent to at least 75 percent of system full scale. At least five (5) confirmed valid data points shall be obtained within this range. Confirmed data points shall be validated by not less than three (3) test runs with results which agree within plus or minus two (2) percent.

1.5 SUBMITTALS

Submittal material, to be submitted in accordance with Section 01 33 00, shall consist of the following:

1. The Contractor's plan for documenting the results from the test program in conformance with the requirements of paragraph 2.2.1, provided eight (8) weeks before testing is to begin, including:

    a. Proposed plan for documenting the calibration of all test instruments

    b. Proposed plan for calibration of all instrument systems, including flow meters and all temperature, pressure, weight, and analysis systems

    c. Sample forms for documenting the results of field pressure and performance tests

    d. Checklists for all system performance and operational testing.

2. The credentials and certification of the testing laboratory proposed by the Contractor for calibration of all test equipment

3. Pre-operational check-out procedures, reviewed and approved by the respective equipment Manufacturers

4. Detailed testing plans, setting forth step-by-step descriptions of the procedures proposed by the Contractor for the systematic testing of all equipment and systems installed under this Contract (and shall include but not be limited to hydrostatic test plans for roller gates, slide gates, bulkheads, etc.).

5. A schedule and subsequent updates, whenever schedule changes occur, presenting the Contractor's plan for testing the equipment and systems installed under this Contract

6. A schedule establishing the expected time period (calendar dates) when the Contractor plans to commence operational testing of the completed systems, along with a description of the temporary systems and installations planned to allow operational testing to take place

7. A summary of the Quality Control Startup & Commissioning Specialist's qualifications, showing conformance to paragraph 01 87 02-1.3.1 requirements

PART 2 PRODUCTS

2.1 GENERAL

The Contractor shall prepare test plans, checklists, and documentation plans as specified in the following paragraphs. The District will not witness any test work for the purpose of acceptance until all test documentation and calibration plans and the specified system or equipment test plans have been submitted and accepted. The District may observe testing activities and verify Contractor is filling out the appropriate checklist forms.

2.2 DOCUMENTATION

2.2.1 Documentation Plans

The Contractor shall develop a records keeping system to document compliance with the requirements of this Section. Calibration documentation shall include identification (by make, Manufacturer, model, and serial number) of all test equipment, date of original calibration, subsequent calibrations, calibration method, and test laboratory.

Equipment and system documentation shall include date of test, equipment number or system name, nature of test, test objectives, test results, test instruments employed for the test and signature spaces for the District's witness and the Contractor's Quality Control Startup & Commissioning Specialist. A separate file shall be established for each system and item of equipment. These files shall include the following information as a minimum:

1. Metallurgical tests

2. Factory performance tests

3. Accelerometer recordings made during shipment

4. Field calibration tests

5. Field pressure tests

6. Field performance tests

7. Field operational tests

The Contractor shall develop test documentation forms specific to each item of equipment and system installed under this Contract. Acceptable documentation forms for all systems and items of equipment shall be produced for review by the District.

2.2.2 Test Plans

The Contractor shall develop test plans detailing the coordinated, sequential testing of each item of equipment and system installed under this Contract. Each test plan shall be specific to the item of equipment or system to be tested. Test plans shall identify by specific equipment or tag number each device or control station to be manipulated or observed during the test procedure and the specific results to be observed or obtained. Test plans shall also be specific as to support systems required to complete the test work, temporary systems required during the test work, Subcontractors' and Manufacturers' representatives to be present and expected test duration.

1. As a minimum, the test plans shall include the following features:

    a. Step-by-step proving procedure for all control and electrical circuits by imposing low voltage currents and using appropriate indicators to affirm that the circuit is properly identified and connected to the proper device

    b. Calibration of all analysis instruments and control sensors

    c. Performance testing of each individual item of mechanical, electrical, and instrumentation equipment. Performance tests shall be selected to duplicate the operating conditions described in the Contract.

    d. System tests designed to duplicate, as closely as possible, operating conditions described in the Contract

2. Test plans shall contain a complete description of the procedures to be employed to achieve the desired test environment.

3. The importance of the test plan submittals is represented by the requirement to provide it as a milestone on the construction progress schedule, and as a line item in the Schedule of Values. Delivery of all test plans required for the systematic field performance and operational tests for all equipment and systems installed under this Contract shall be made eight (8) weeks in advance of the date the Contractor wishes to begin such testing. Once the District has reviewed and taken no exception to the Contractor's test plans, the Contractor shall reproduce the plans in sufficient number for the Contractor's purposes and an additional ten copies for delivery to the District. No test work shall begin until the Contractor has delivered the specified number of final test plans to the District.

2.2.3 Testing Schedule

1. The Contractor shall produce a testing schedule setting forth the sequence contemplated for performing the test work. The schedule shall be in bar chart form, plotted against calendar time, shall detail the equipment and systems to be tested, and shall be coordinated with the Contractor's construction schedule specified in Section 01 32 16. The schedule shall show the contemplated start date, duration of the test and completion of each test. The test schedule shall be submitted no later than four weeks in advance of the date testing is to begin. The District will not witness any testing work for the purpose of acceptance until the Contractor has submitted a schedule to which the District takes no exception. The test schedule shall be updated weekly, showing actual dates of test work, indicating systems and equipment testing completed satisfactorily and meeting the requirements of this Contract.

2. All performance and operational testing required under this Section shall be completed prior to the start of commissioning.

2.3 SYSTEM AND EQUIPMENT PERFORMANCE TESTS

Each item of mechanical, electrical, instrumentation and HVAC equipment installed under this Contract shall be tested to demonstrate compliance with the performance requirements of this Contract.

Each electrical, instrumentation, mechanical, piping, and HVAC system installed or modified under this contract shall be tested in accordance with the requirements of this Contract.

2.4 OPERATIONAL TESTS

Once all equipment and systems have been tested individually, the Contractor shall fill all systems with the intended process fluids sufficient to satisfy all individual component and system tests. Temporary water supply and simulated operation conditions will be required to be developed and implemented by the Contractor. Submit hydrostatic testing plans for District approval. The Contractor shall then operate all systems for a continuous period of not less than five (5) days or as specified by the District, simulating actual operating conditions. The Contractor shall install temporary connections, bulkheads and make other provisions to recirculate process fluids or otherwise simulate anticipated operating conditions. During the operational testing period, the Contractor's Quality Control Startup & Commissioning Specialist and testing team shall monitor the characteristics of each machine and system and report any unusual conditions to the District.

A testing plan for the 375 cfs pumps (PS S-470) into the new discharge configuration constructed under this project shall be performed and shall be provided for approval by the District. It must verify that the system can be operated for extended periods to the anticipated performance.

A testing plan for all 16-inch AWWA butterfly valves and appurtenances (PS S-470) under this project shall be performed and shall be provided for approval by the District. It must verify that the system can be operated for extended periods to the anticipated performance.

A testing plan for the 42 cfs pumps (PS S-479) constructed under this project shall be performed and shall be provided for approval by the District. It must verify that the system can be operated for extended periods to the anticipated performance.

A testing plan shall be provided for all gates, bulkheads, needles, etc., as required.

2.5 PRODUCT DATA

Records produced during the testing program shall be considered as Product Data, to be provided in accordance with Section 01 33 00.

~~A testing plan shall be provided for all gates, bulkheads, needles, etc., as required.~~

PART 3 EXECUTION

3.1 GENERAL

The Contractor's Quality Control Startup & Commissioning Specialist shall organize teams made up of qualified representatives of equipment suppliers (for both Contractor and District supplied equipment and materials), Subcontractors, the Contractor's independent testing laboratory, and others, as appropriate, to efficiently and expeditiously calibrate and test the equipment and systems installed and constructed under this Contract. The objective of the testing program shall be to demonstrate, to the District's complete satisfaction, that the structures, systems, and equipment constructed and installed under this Contract meet all performance requirements and the facility is ready for the commissioning process to commence. In addition, the testing program shall produce baseline operating conditions for the District to use in a preventive maintenance program.

3.2 CALIBRATION OF FIXED INSTRUMENTS

Calibration of analysis instruments, sensors, gages, and meters installed under this Contract shall proceed on a system-by-system basis. No equipment or system performance acceptance tests shall be performed until instruments, gages, and meters to be installed in that particular system have been calibrated and the calibration work has been witnessed by the District.

All analysis instruments, sensors, gages, and meters used for performance testing shall be subject to recalibration to confirm accuracy after completion, but prior to acceptance of each performance test. All analysis instruments, sensors, gages, and meters installed under this Contract shall be subject to recalibration as a condition precedent to commissioning under the provisions of Section 01 91 00 COMMISSIONING.

3.3 PERFORMANCE TESTS

3.3.1 General

The performance test shall demonstrate integration and the working of all systems in concert. Performance tests shall consist of the following:

1. Pressure and/or leakage tests

2. Electrical testing as specified in Division 26

3. Wiring and piping, individual component, loop, loop commissioning and tuning testing as described for all systems

4. Pre-operational checkout for all mechanical and HVAC equipment. Pre-operational check-out procedures shall be reviewed and approved by the respective equipment Manufacturers.

5. Initial operation tests of all mechanical, electrical, HVAC, and instrumentation equipment and systems to demonstrate compliance with the performance requirements of this Contract.

6. In general, performance tests for any individual system shall be performed in the order listed above. The order may be altered only on the specific written authorization of the District after receipt of a written request, complete with justification of the need for the change in sequence.

3.3.2 Pressure and Leakage Tests

Pressure and leakage tests shall be conducted in accordance with applicable portions of the Specifications. All acceptance tests shall be witnessed by the District. Evidence of successful completion of the pressure and leakage tests shall be the District representative's signature on the test forms prepared by the Contractor.

3.3.3 Functional Checkout

Prior to energization (in the case of electrical systems and equipment), all circuits shall be run out and tested for continuity and shielding in accordance with the procedures required in Division 26.

3.3.4 Component Calibration and Loop Testing

Prior to energization (in the case of instrumentation system and equipment), all loops and associated instruments shall be calibrated and tested in accordance with the procedures required in Divisions 35, 40, and 26.

3.3.5 Electrical Resistance

Electrical resistance testing shall be in accordance with Division 26.

3.3.6 Pre-Operational Tests

Pre-operational tests shall include the following:

1. Alignment of equipment using reverse dial indicator method

2. Pre-operation lubrication

3. Tests per the Manufacturers' recommendations for prestart preparation and pre-operational check-out procedures

3.3.7 Functional Tests

3.3.7.1 General

1. Once all affected equipment has been subjected to the required pre-operational check-out procedures and the District has witnessed and has not found deficiencies in that portion of the work, individual items of equipment and systems may be started and operated under simulated operating conditions to determine as nearly as possible whether the equipment and systems meet the requirements of these specifications and whether equipment and systems demonstrate integration and the working of all systems in concert. If available, canal water may be employed for the testing of all liquid systems except gaseous, oil, or chemical systems. If not available, potable water shall be employed as the test medium. Test media for these systems shall either be the intended fluid or a compatible substitute. The equipment shall be operated a sufficient period of time to determine machine operating characteristics, including noise, temperatures and vibration; to observe performance characteristics; and to permit initial adjustment of operating controls. When testing requires the availability of auxiliary systems such as looped piping, electrical power, compressed air, control air, or instrumentation which have not yet been placed in service, the Contractor shall provide acceptable substitute sources, capable of meeting the requirements of the machine, device, or system at no additional cost to the District. Disposal methods for test media shall be subject to review by the District. During the functional test period, the Contractor shall obtain baseline operating data on all equipment with motors greater than 1 horsepower to include amperage, bearing temperatures, and vibration. The baseline data shall be collected for the District to enter in a preventive maintenance system.

2. Test results shall be within the tolerances set forth in the detailed specification sections of this Contract. If no tolerances have been specified, test results shall conform to tolerances established by recognized industry practice. Where, in the case of an otherwise satisfactory functional test, any doubt, dispute, or difference should arise between the District and the Contractor regarding the test results or the methods or equipment used in the performance of such test, the District may order the test to be repeated.

3. If the repeat test, using such modified methods or equipment as the District may require, confirms the previous test, then all costs in connection with the repeat test will be paid by the District. Otherwise, the costs shall be borne by the Contractor. Where the results of any functional test fail to comply with the Contract requirements for such test, then such repeat tests as may be necessary to achieve the Contract requirements shall be made by the Contractor at his expense. The Contractor shall provide, at no expense to the District, all power, fuel, compressed air supplies, water, chemicals, and any other necessary consumable item, all labor, temporary piping, heating, ventilating, and air conditioning for any areas where permanent facilities are not complete and operable at the time of functional tests, and all other items and work, required to complete the functional tests. Temporary facilities shall be maintained until permanent systems are in service.

3.3.7.2 Retesting

If under test, any portion of the work should fail to fulfill the Contract requirements and is adjusted, altered, renewed, or replaced, tests on that portion when so adjusted, altered, removed, or replaced, together with all other portions of the work as are affected thereby, shall, unless otherwise directed by the District, be repeated within reasonable time and in accordance with the specified conditions. The Contractor shall pay to the District all reasonable expenses incurred by the District, including the costs of the Engineer if applicable, as a result of repeating such tests.

3.3.7.3 Post-Test Inspection

Once functional testing has been completed, all machines shall be rechecked for proper alignment and realigned, as required. All equipment shall be checked for loose connections, unusual movement, or other indications of improper operating characteristics. Any deficiencies shall be corrected to the satisfaction of the District. All machines or devices which exhibit unusual or unacceptable operating characteristics shall be disassembled and inspected. Any defects found during the course of the inspection shall be repaired or the specific part or entire equipment item shall be replaced to the complete satisfaction of the District at no cost to the District.

-- End of Section --

SECTION 01 91 00

COMMISSIONING

PART 1 GENERAL

1.1 SCOPE

1.1.1 Summary of Work

This Section contains requirements for the Contractor's performance prior to (i.e. operational testing period) and during the commissioning of the structures, equipment and systems constructed and installed during the course of this Contract. All Work during the operational testing period and prior to commissioning shall be done by the Contractor.

1.1.2 Related Work Specified Elsewhere

1. SECTION 01 33 00 SUBMITTALS

1.2 QUALITY REQUIREMENTS

1.2.1 Cleanup

Following completion of the operational testing period, the Contractor shall remove, clean, and replace all permanent and temporary filters and strainers in all pipeline systems; replace all HVAC (heating, ventilation and air conditioning) filters; dewater and clean all sumps; and dewater all process units for final inspection as a condition precedent to commissioning.

1.2.2 Commissioning team

The Contractor shall assemble a commissioning team under the direction of the Contractor's Quality Control Startup & Commissioning Specialist, duly authorized to commit the Contractor's personnel and resources to respond to requests from the District. The commissioning team shall consist of representatives of the Contractor's mechanical, electrical, and instrumentation subcontractors, and others as appropriate. The commissioning team shall be available at the Site of the Work when needed. The commissioning team shall at all times be equipped and ready to provide for emergency repairs, adjustments, and corrections to the equipment and systems installed and modified as a part of this Contract.

1.3 SUBMITTALS

The following information shall be submitted to the District in accordance with the provisions of Section 01 33 00:

Detailed plans for commissioning each process unit and each system constructed or modified as a part of the Work performed under this Contract.

The Contractor's commissioning team shall include a staffing plan with names, qualifications, and telephone numbers of those assigned with both daytime and off-hour standby duty.

PART 2 PRODUCTS

Working with representatives of the District, the Engineer, and the Manufacturers and suppliers of District or Contractor Furnished Equipment and Materials, the Contractor shall develop and produce a detailed, written plan for the start-up and initial operation, under actual operating conditions, of the equipment and systems installed and constructed under this Contract. The document, after acceptance by the District, shall serve as the guidance manual for the commissioning process.

PART 3 EXECUTION

After completion of the equipment and system performance and operational testing, where required, and agreement on the part of the District that the systems did meet all test requirements, commissioning will begin.

Commissioning of the 375 cfs pumps' discharge piping will involve operating pump station S-470.

Commissioning of the pump station S-479 will involve operating the pumps at this pump station.

The Contractor shall remove all temporary piping, bulkheads, controls and other alterations to the permanent systems that may have been needed during the performance and operational testing and shall perform the tasks necessary to make the improvements constructed under this Contract fully operational. The District shall confirm in writing the date(s) that the system is ready for commissioning and on which actual commissioning activities commence. Activities conducted prior to such written confirmation shall not constitute commissioning.

The District's operation and maintenance personnel will be responsible for operation of the systems to be commissioned, with guidance and support by the Commissioning Team. The portion of the Work to be commissioned shall be fully operational, performing all functions for which it was designed.

The Contractor shall be available at all times during commissioning periods to provide immediate assistance in case of failure of any portion of the system being constructed.

During the commissioning period, the District shall be responsible for all normal operational costs and the Contractor shall bear the costs of all necessary repairs or replacements, including labor and materials, required to keep the portion of the plant being commissioned, operational including all gates, instrumentation, equipment, etc.

-- End of Section --

SECTION 01 91 10

TRAINING

PART 1 GENERAL

1.1 SCOPE

1.1.1 Summary of Work

This Section contains requirements for training the District's personnel, by persons retained by the Contractor specifically for the purpose, in the proper operation and maintenance of the equipment and systems installed under this Contract. In addition, the Contractor shall coordinate, plan and schedule training for Owner Furnished equipment, as specified in Contract Documents.

1.1.2 Related Work Specified Elsewhere

1. Section 01 33 00 SUBMITTALS
2. Section 01 78 05 OPERATION AND MAINTENANCE INFORMATION
3. Section 01 91 00 COMMISSIONING

1.2 QUALITY REQUIREMENTS

Where required by the Technical Specifications, the Contractor shall provide on-the-job training of the District's personnel. The training sessions shall be conducted by qualified, experienced, factory-trained representatives of the various equipment Manufacturers. The Contractor will be responsible for coordinating the training services for Owner Furnished equipment as well as Contractor Furnished equipment. Training shall include instruction in both operation and maintenance of the subject equipment.

1.3 SUBMITTALS

The following information shall be submitted to the District in accordance with the provisions of Section 01 33 00 SUBMITTALS:

SD-11 Closeout Submittals

Lesson Plans

The material shall be provided as a line item on the Schedule of Values. This information shall be provided not less than three (3) weeks prior to each proposed training (see also paragraph 2.3)

Lesson plans for each training session to be conducted by the Manufacturer's representatives. In addition, training manuals, handouts, visual aids, and other reference materials shall be included.

Subject of each training session, identity and qualifications of individuals to be conducting the training, and tentative date and time of each training session.

PART 2 PRODUCTS

2.1 GENERAL

Where specified, the Contractor shall conduct training sessions for the District's personnel to instruct the staff on the proper operation, care, and maintenance of the equipment and systems installed under this Contract. Training shall take place at the Site of the Work and under the conditions specified in the following paragraphs. Approved operation and maintenance manuals shall be available at least 30 days prior to the date scheduled for the individual training session. See Sections 01 33 00 SUBMITTALS, 01 91 00 COMMISSIONING, and 01 78 05 OPERATION AND MAINTENANCE INFORMATION.

2.2 LOCATION

Training sessions shall take place at the Site of the Work in Hendry County, Florida.

2.3 LESSON PLANS

Formal written lesson plans shall be prepared for each training session. Lesson plans shall contain an outline of the material to be presented along with a description of visual aids to be utilized during the session. Each plan shall contain a time allocation for each subject.

One complete set of originals of the lesson plans, training manuals, handouts, visual aids, and reference material shall be the property of the District and shall be suitably bound for proper organization and easy reproduction. The Contractor shall furnish ten (10) copies of necessary training manuals, handouts, visual aids and reference materials as specified in 1.03 above prior to each training session.

2.4 FORMAT AND CONTENT

Each training session shall be comprised of time spent both in the classroom and at the specific location of the subject equipment or system. As a minimum, training session shall cover the following subjects for each item of equipment or system:

2.4.1 Familiarization

1. Review catalog, parts lists, drawings, etc., which have been previously provided for the plant files and operation and maintenance manuals.

2. Check out the installation of the specific equipment items.

3. Demonstrate the unit and indicate how all parts of the specifications are met.

4. Answer questions.

2.4.2 Safety

1. Using material previously provided, review safety references.

2. Discuss proper precautions around equipment.

2.4.3 Operation

1. Using material previously provided, review reference literature.

2. Explain all modes of operation (including emergency).

3. Check out District's personnel on proper use of the equipment.

2.4.4 Preventive Maintenance

1. Using material previously provided, review preventive maintenance (PM) lists including:

   a. Reference material

   b. Daily, weekly, monthly, quarterly, semiannual, and annual jobs

2. Show how to perform PM jobs.

3. Show the District's personnel what to look for as indicators of equipment problems.

2.4.5 Corrective Maintenance

1. List possible problems.

2. Discuss repairs--point out special problems.

3. Open up equipment and demonstrate procedures, where practical.

2.4.6 Parts

1. Show how to use previously provided parts list and order parts.

2. Check over spare parts on hand. Make recommendations regarding additional parts that should be available.

2.4.7 Local Representatives

1. Where to order parts: Name, address, telephone

2. Service problems

3. Who to call

4. How to get emergency help

2.4.8 Operation and Maintenance Manuals

1. Review any other material submitted.

2. Update material, as required.

2.5 VIDEO RECORDING

The District will record each training session. The Contractor shall advise all Manufacturers providing training sessions that the material will be

video taped and shall make available to the District such utility services and accommodation as may be required to facilitate the production of the video tape recording.

PART 3 EXECUTION

3.1 TRAINING

Training shall be conducted in conjunction with the operational testing periods. Classes shall be scheduled such that classroom sessions are interspersed with field instruction in a logical sequence. The Contractor shall arrange to have the training conducted on consecutive days, with no more than six (6) hours of classes scheduled for any one (1) day. Concurrent classes shall not be allowed.

Training shall be provided, as specified, for the following equipment:

a. Piezometers

b. Dual-leaf gates and appurtenances

c. Slide gates and appurtenances

d. Single-stem roller gates and appurtenances

e. Hoist operated roller gates and appurtenances

f. Vertical axial flow pumps

h. Air supply, distribution, ventilation, and exhaust systems

i. Instrumentation and control devices for HVAC

j. LPG fuel tank monitoring systems

k. LPG fuel system for emergency generators

l. Cathodic protection system

m. Precast restroom toilet

n. Process control field training (i.e., preliminary operator training, additional operator training, and specialized training)

o. Embankment Geotechnical Monitoring System.

p. 125 cfs pump station (S-479).

q. Supplemental training associated with discharge features for 1500 cfs pump station (S-470).

r. All generators within this project.

3.2 ACCEPTABLE OPERATION AND MAINTENANCE MANUALS

Acceptable operation and maintenance manuals for the specific equipment shall be provided to the District prior to the start of any training. Video taping shall take place concurrently with all training sessions.

3.3 SERVICES

The following services shall be provided for each item of equipment or system as required in individual specification sections. Additional services shall be provided, where specifically required in individual specification sections.

As a minimum, classroom equipment training for operations personnel will include:

1. Using slides and drawings, discuss the equipment's specific location in the plant and an operational overview.

2. Purpose and plant function of the equipment.

3. A working knowledge of the operating theory of the equipment.

4. Start-up, shutdown, normal operation, and emergency operating procedures, including a discussion on system integration and electrical interlocks, if any.

5. Identify and discuss safety items and procedures.

6. Routine preventative maintenance, including specific details on lubrication and maintenance of corrosion protection of the equipment and ancillary components.

7. Operator detection, without test instruments, of specific equipment trouble symptoms.

8. Required equipment exercise procedures and intervals.

9. Routine disassembly and assembly of equipment if applicable (as judged by the District on a case-by-case basis) for purposes such as operator inspection of equipment.

As a minimum, hands-on equipment training for operations personnel will include:

1. Identify location of equipment and review the purpose.

2. Identify piping and flow options.

3. Identify valves and their purpose.

4. Identify instrumentation:

    a. Location of primary element.

    b. Location of instrument readout.

c. Discuss purpose, basic operation, and information interpretation.

5. Discuss, demonstrate, and perform standard operating procedures and round checks.

6. Discuss and perform the preventative maintenance activities.

7. Discuss and perform start-up and shutdown procedures.

8. Perform the required equipment exercise procedures.

9. Perform routine disassembly and assembly of equipment if applicable.

10. Identify and review safety items and perform safety procedures, if feasible.

Classroom equipment training for the maintenance and repair personnel will include:

1. Theory of operation

2. Description and function of equipment

3. Start-up and shutdown procedures

4. Normal and major repair procedures

5. Equipment inspection and troubleshooting procedures including the use of applicable test instruments and the "pass" and "no pass" test instrument readings

6. Routine and long-term calibration procedures

7. Safety procedures

8. Preventative maintenance such as lubrication; normal maintenance such as belt, seal, and bearing replacement; and up to major repairs such as replacement of major equipment part(s) with the use of special tools, bridge cranes, welding jigs, etc.

Hands-on equipment training for maintenance and repair personnel shall include:

1. Locate and identify equipment components.

2. Review the equipment function and theory of operation.

3. Review normal repair procedures.

4. Perform start-up and shutdown procedures.

5. Review and perform the safety procedures.

6. Perform District approved practice maintenance and repair job(s), including mechanical and electrical adjustments and calibration and troubleshooting equipment problems.

-- End of Section --

SECTION 02 33 00

STANDARD PENETRATION TEST

PART 1 GENERAL

1.1 SCOPE

Summary of Work: The Contractor shall furnish all labor, equipment, materials, and supplies required to make the borings, obtain soil samples and provide other subsurface information as specified herein. Standard Penetration Test (SPT) Borings shall be drilled to 75 feet deep, sampled, logged and grouted at locations described in Specification Sections 31 09 00 GEOTECHNICAL INSTRUMENTATION AND MONITORING OF EARTHWORK, 31 56 13.13 SOIL BENTONITE SLURRY WALL, and 33 11 53 MONITORING WELLS.

Related Sections include but are not necessarily limited to:

1. DIVISION 1 General Requirements

2. Section 01 33 00 SUBMITTALS

3. Section 31 09 00 GEOTECHNICAL INSTRUMENTATION AND MONITORING OF EARTHWORK

4. Section 31 56 13.13 SOIL BENTONITE SLURRY WALL

5. Section 33 11 53 MONITORING WELLS

1.2 APPLICABLE PUBLICATIONS

ASTM INTERNATIONAL (ASTM)

ASTM D1586	(2011) Penetration Test and Split-Barrel Sampling of Soils
ASTM D2487	(2011) Soils for Engineering Purposes (Unified Soil Classification System)

U.S. ARMY CORPS OF ENGINEERS (USACE)

ER 1110-1-1807	(2014) Drilling in Earth Embankment Dams and Levees

1.3 DEFINITIONS

The Standard Penetration Test (SPT) is defined as recording the number of hammer blows of a 140 pound hammer freely falling a vertical distance of 30 inches required to drive a 2-inch outside diameter split spoon sampler a distance of 12 inches.

1.4 SUBMITTALS

SD-01 Preconstruction Submittals

Boring Logs

1.5 QUALIFICATIONS

The Contractor shall provide the Work under the direct supervision of a geotechnical engineer registered in the State of Florida (i.e. licensed Florida P.E.).

1.6 RESPONSIBILITIES

Not Used

1.7 CERTIFICATIONS AND TESTING

Where required in Division 1, the Contractor shall provide Certifications and perform Quality Testing. The Contractor shall provide calibration certificates for all SPT hammers. The calibrations shall be dated not more than 12 months prior the start of the Work.

1.8 INSPECTION COORDINATION

The Contractor shall provide access to the Work for the District as requested for inspection. The Contractor shall provide 48 hours notice of its intention to begin new Work activities.

1.9 WARRANTY

Not Used

PART 2 PRODUCTS

Not Used

PART 3 EXECUTION

3.1 GENERAL

Each Standard Penetration Test boring shall be performed as per ASTM D1586. Contractor shall take all necessary precautions (such as evaluate and monitor drilling fluid pressures) to avoid hydraulic fracture of the dam foundation soils while accomplishing SPT borings as described in ER 1110-1-1807. At least one sample shall be taken from each distinct soil stratum, which is penetrated. In no case shall the interval between samples exceed two and one-half feet. An automatic hammer shall be utilized for all SPT data collection. The hammer shall be calibrated within 12 months prior to the Work. All samples shall be preserved in watertight containers permanently and legibly marked to provide complete identification. Upon completion and acceptance of the Work in each location the Contractor shall fill or otherwise close the entire depth of the boring from bottom to top with cement-bentonite grout (3 percent bentonite). Each work area shall be cleaned and left in satisfactory condition.

3.2 RECORDS

A signed and sealed boring log in gINT format shall be submitted for each boring. The results of the boring log shall be utilized by the Contractor to finalize/confirm the tip elevations for the Temporary Piezometers described in Section 31 09 00, and to finalize/confirm the elevation of the bottom of the Soil Bentonite (SB) Wall. Four copies of the Boring Log and an electronic version shall be submitted to the District within ten calendar days after completion of the field investigations. The electronic version should include the log of each boring in gINT format. In addition, each gINT log should be transported/converted to AUTOCAD file format and submitted as part of the electronic submittal.

The logs shall show the boring number, description of the material in the boring, elevation at which each change in material occurs; depth at which samples were obtained and the type of sample in each instance; penetration resistance; percentage of core recovery; depth of water table; and any other data pertinent to identification of the material. Soils shall be classified in accordance with the Unified Soil Classification System (ASTM D2487) and appropriate geologic nomenclature. Each boring log shall indicate the location at which each boring was actually drilled and ground elevation at each boring location.

Locations shall reference the project State Plane coordinate system and the project Station - Offset of the Baseline of the Dam, accurate to the nearest one foot, and elevations shall reference NAVD, accurate to the nearest 0.1 foot, all as determined by a Professional Survey Mapper (PSM) under agreement with the Contractor.

3.3 SAMPLE RETENTION

The soil borings shall be retained for a minimum of one-year following the date of collection. The samples shall be made available to the District for review upon request by the District.

-- End of Section --

SECTION 02 41 00

DEMOLITION

PART 1 GENERAL

1.1 SCOPE

Summary of Work: The Contractor shall provide all the equipment, materials and labor required to demolish and remove/relocate the items indicated on the drawings and/or set forth in the specifications.

1.2 RELATED WORK SPECIFIED ELSEWHERE

There are other specification sections that relate to this section that are not necessarily cited herein.

1.3 REFERENCES

The publications listed below form a part of this specification to the extent referenced. The publications are referred to within the text by the basic designation only.

AIR-CONDITIONING, HEATING AND REFRIGERATION INSTITUTE (AHRI)

AHRI Guideline K	(2009) Guideline for Containers for Recovered Non-Flammable Fluorocarbon Refrigerants

AMERICAN ASSOCIATION OF STATE HIGHWAY AND TRANSPORTATION OFFICIALS (AASHTO)

AASHTO T 180	(2015) Standard Method of Test for Moisture-Density Relations of Soils Using a 4.54-kg (10-lb) Rammer and a 457-mm (18-in.) Drop

AMERICAN SOCIETY OF SAFETY ENGINEERS (ASSE/SAFE)

ASSE/SAFE A10.6	(2006) Safety Requirements for Demolition Operations

ASTM INTERNATIONAL (ASTM)

ASTM D2487	(2011) Soils for Engineering Purposes (Unified Soil Classification System)

FLORIDA DEPARTMENT OF TRANSPORTATION (FDOT)

FDOT	Standard Specifications for Road and Bridge Constructions

U.S. ARMY CORPS OF ENGINEERS (USACE)

EM 385-1-1	(2014) Safety and Health Requirements Manual

U.S. NATIONAL ARCHIVES AND RECORDS ADMINISTRATION (NARA)

40 CFR 82 Protection of Stratospheric Ozone

1.4 SUBMITTALS

Submit the following in accordance with section 01 33 00 SUBMITTAL PROCEDURES:

SD-01 Preconstruction Submittals

Demolition Plan

Existing Condition Survey

1.5 PROJECT DESCRIPTION

The demolition and removal items include but are not limited to the existing LPDD pump stations located on the LPDD header canal, existing fuel storage and containment structures, existing steel framed sheds, existing paved roads, existing culverts, existing irrigation and drainage piping, existing barricades, fences and gates, power poles, guardrails, and septic tank(s). The demolition also includes the removal and existing pre-load mounds of material, embankment ramps and associated components placed in an earlier contract including:

1.5.1 Preload Soil Material

Remove the material down to the prepared foundation level and place in the location designated as a Stockpile area.

1.5.2 Piezometers

Remove all cable and conduit to 3 feet below the prepared foundation level. The remainder of the grouted conduit can remain in place.

1.5.3 Inclinometers

Remove the casing from the top of the preload mound to 3 feet below the prepared foundation level. Fill the remaining casing with cement-bentonite grout.

1.5.4 Settlement Plates

Remove all settlement plate components down to the prepared foundation level.

1.5.5 Data Logger Stations

Remove all equipment, conduit and cables and the existing bollards associated with the data logger stations.

1.5.6 Demolition Plan

Prepare a Demolition Plan and submit proposed demolition and removal procedures for approval before work is started. Include in the plan procedures for careful removal and disposition of materials specified to be

salvaged, coordination with other work in progress, a disconnection schedule of utility services, and a detailed description of methods and equipment to be used for each operation and of the sequence of operations. Provide detailed steps and sequencing to be followed in removing the existing LPDD Pump Stations. Coordinate with Waste Management Plan. State provisions for securing the safety of the workers throughout the performance of the work. Provide procedures for safe conduct of the work in accordance with EM 385-1-1. Plan shall be approved by District prior to work beginning.

Plan shall include reference to the removal of irrigation and drainage pipe as specified in Section ~~03 23 13~~31 23 13 SUBGRADE PREPARATION.

Plan shall include the removal of irrigation and drainage pipe discovered in the borrow areas.

1.5.7 General Requirements

Do not begin demolition until authorization is received from the District. Remove rubbish and debris from the project site; do not allow accumulations inside or outside the buildings. The work includes demolition, of identified items and materials, and removal of resulting rubbish and debris. Remove rubbish and debris from property daily, unless otherwise directed. Store materials that cannot be removed daily in areas specified by the District. In the interest of occupational safety and health, perform the work in accordance with EM 385-1-1, Section 23, Demolition, and other applicable Sections.

1.6 ITEMS TO REMAIN IN PLACE

Take necessary precautions to avoid damage to existing items to remain in place, to be reused, or to remain the property of the District. Repair or replace damaged items as approved by the District. Coordinate the work of this section with all other work indicated. Construct and maintain shoring, bracing, and supports as required. Ensure that structural elements are not overloaded. Increase structural supports or add new supports as may be required as a result of any cutting, removal, or demolition work performed under this contract. Provide new supports and reinforcement for existing construction weakened by demolition, or removal work. Repairs, reinforcement, or structural replacement require approval by the District prior to performing such work.

1.6.1 Existing Construction Limits and Protection

Do not disturb existing construction beyond the extent indicated or necessary for installation of new construction. Provide temporary shoring and bracing for support of building components to prevent settlement or other movement. Provide protective measures to control accumulation and migration of dust and dirt in all work areas. Remove dust, dirt, and debris from work areas daily.

1.6.2 Trees

Protect trees within the project site which might be damaged during demolition, and which are indicated to be left in place, by a 6 foot high fence. Erect and secure fence a minimum of 5 feet from the trunk of individual trees or follow the outer perimeter of branches or clumps of trees.

1.6.3 Utility Service

Maintain existing utilities indicated to stay in service and protect against damage during demolition operations. Prior to start of work, utilities serving each area of alteration or removal will be shut off by the utility owner and disconnected and sealed by the Contractor.

1.6.4 Facilities

Protect electrical and mechanical services and utilities. Where removal of existing utilities and pavement is specified or indicated, provide approved barricades, temporary covering of exposed areas, and temporary services or connections for electrical and mechanical utilities. Floors, roofs, walls, columns, pilasters, and other structural components that are designed and constructed to stand without lateral support or shoring, and are determined to be in stable condition, must remain standing without additional bracing, shoring, or lateral support until demolished, unless directed otherwise by the District. Ensure that no elements determined to be unstable are left unsupported and place and secure bracing, shoring, or lateral supports as may be required as a result of any cutting, removal or demolition work performed under this contract.

1.6.5 Groundwater Monitoring Wells

Preserve and protect the existing groundwater monitoring wells location at/near the perimeter of the reservoir maintenance road. Contractor shall, at his/her costs, repair/replace the monitoring wells that are damaged as a result of construction activities.

1.7 BURNING

Where burning is permitted, adhere to federal, state, and local regulations. Contractor is responsible for obtaining and maintaining burn permits.

1.8 AVAILABILITY OF WORK AREAS

Areas in which the work is to be accomplished will be available at the NTP for construction. Coordinate all work and shared project limits with other Contractors that are on site.

1.9 QUALITY REQUIREMENTS

Notify the District in writing 10 working days prior to the commencement of work. Comply with federal, state, and local hauling and disposal regulations. In addition to the requirements of the "Contract Clauses," conform to the safety requirements contained in ASSE/SAFE A10.6. Comply with the Environmental Protection Agency requirements specified. Use of explosives will not be permitted.

1.9.1 Dust Control

Prevent the spread of dust and debris and avoid the creation of a nuisance or hazard in the surrounding area. Do not use water if it results in hazardous or objectionable conditions such as, but not limited to, flooding, or pollution. Sweep pavements as often as necessary to control the spread of dust and debris.

1.10 PROTECTION

1.10.1 Traffic Control Signs

Where pedestrian and driver safety is endangered in the area of removal work, use traffic barricades with flashing lights and in accordance with FDOT requirements. Anchor barricades in a manner to prevent displacement by wind, jet or prop blast. Notify the District prior to beginning such work.

1.10.2 Protection of Personnel

Before, during and after the demolition work continuously evaluate the condition of the structure being demolished and take immediate action to protect all personnel working in and around the project site. No area, section, or component of floors, roofs, walls, columns, pilasters, or other structural element will be allowed to be left standing without sufficient bracing, shoring, or lateral support to prevent collapse or failure while workmen remove debris or perform other work in the immediate area.

1.11 RELOCATIONS

Perform the removal and reinstallation of relocated items as indicated with workmen skilled in the trades involved. Repair or replace items to be relocated which are damaged by the Contractor with new undamaged items as approved by the District.

1.12 EXISTING CONDITIONS

Before beginning any demolition work, survey the site and examine the drawings and specifications to determine the extent of the work. Record existing conditions in the presence of the District showing the condition of structures and other facilities adjacent to areas of alteration or removal. Photographs sized 4 inch will be acceptable as a record of existing conditions. Include in the record the elevation of the top of foundation walls, finish floor elevations, possible conflicting electrical conduits, plumbing lines, alarms systems, the location and extent of existing cracks and other damage and description of surface conditions that exist prior to/or before starting work. It is the Contractor's responsibility to verify and document all required outages which will be required during the course of work, and to note these outages on the record document. Submit the existing condition survey results and photos.

PART 2 PRODUCTS

2.1 FILL MATERIAL

a. Comply with excavating, backfilling, and compacting procedures for soils used as backfill material to fill voids, depressions or excavations resulting from demolition of structures.

b. Satisfactory fill materials comprise any materials classified by ASTM D2487 as SP, SP-SM, SM, SC, and SP-SC. Satisfactory materials for fill shall also be free from roots, large organic matter, trash debris and stones larger than 3 inches in any dimension.

c. Proposed fill material must be sampled and tested by an approved soil testing laboratory, as follows:

Soil classification	ASTM D2487
Moisture-density relations	AASHTO T 180, Method B or D

PART 3 EXECUTION

3.1 EXISTING FACILITIES TO BE REMOVED

Inspect each structure to be removed for active wildlife. Notify the District immediately if wildlife is observed or encountered in any of the structures to be removed.

Existing construction scheduled to be removed for reuse shall be disassembled. Dismantled and removed materials are to be separated, set aside, and prepared as specified, and stored or delivered to a collection point for reuse, remanufacture, recycling, or other disposal, as specified. Materials shall be designated for reuse onsite whenever possible.

If hazardous materials are found including fuels, fertilizers, pesticides, etc., the Contractor shall notify the District immediately.

All work associated with the pump station containment structures and fuel tanks shall be conducted by a State of Florida License Pollution Specialty Storage Tanks Contractor. The selected Contractor shall recover residual fuel from onsite storage tank, degas clean and secure tanks for proper offsite disposal. Residual sludge or solid shall be collected and placed in a FDOT approved shipping containers and characterized and manifested for disposal. Fuel storage tanks disposal shall include the tank being cut into sections and transported to a metal recycler for processing. Contact water within contaminate structure shall be removed as petroleum contact water. No liquids shall be released to ground.

The Contractor shall visually inspect containment structures for petroleum stained areas. Portions of the contaminant that are visual stained or impacted shall be products segregated from non-impacted sections of the containment structures. Debris generated during the removal of the containments structures shall be characterized and manifest for offsite disposal. A representative for the District will review and sign all disposal manifest.

3.1.1 Structures

a. Remove existing structures indicated to be removed to grade.

b. Demolish structures in a systematic manner from the top of the structure to the ground. Complete demolition work above each tier or floor before the supporting members on the lower level are disturbed. Demolish concrete and masonry walls in small sections. Remove structural framing members and lower to ground by means of derricks, platforms hoists, or other suitable methods as approved by the District.

c. Locate demolition equipment throughout the structure and remove materials so as to not impose excessive loads to supporting walls, floors, or framing.

3.1.2 Utilities and Related Equipment

3.1.2.1 General Requirements

Do not interrupt existing utilities serving occupied or used facilities, except when authorized in writing by the District. Do not interrupt existing utilities serving facilities occupied and used by the District or the LPDD except when approved in writing and then only after temporary utility services have been approved and provided. Do not begin demolition work until all utility disconnections have been made.

3.1.2.2 Disconnecting Existing Utilities

Remove existing utilities uncovered by work and terminate in a manner conforming to the nationally recognized code covering the specific utility and approved by the District. When utility lines are encountered but are not indicated on the drawings, notify the District prior to further work in that area. Remove meters and related equipment and deliver to a location in accordance with instructions of the District.

3.1.3 Chain Link Fencing

Remove chain link fencing, gates and other items scheduled for demolition and removal. Remove gates as whole units. Cut chain link fabric to 25 foot lengths and store in rolls off the ground.

3.1.4 Paving and Slabs

Remove concrete and asphaltic concrete paving and slabs including aggregate base. Provide neat sawcuts at limits of pavement removal as indicated. Pavement and slabs not to be used in this project shall be removed from the Installation at Contractor's expense.

3.1.5 Structural Steel

Dismantle structural steel at field connections and in a manner that will prevent bending or damage. Salvage for recycle structural steel, steel joists, girders, angles, plates, columns and shapes. Flame-cutting torches are permitted when other methods of dismantling are not practical. Transport steel joists and girders as whole units and not dismantled. Transport structural steel shapes to a designated recycling facility, stacked according to size, type of member and length, and stored off the ground, protected from the weather.

3.1.6 Miscellaneous Metal

Scrap metal shall become the Contractor's property. Recycle scrap metal as part of demolition operations. Provide separate containers to collect scrap metal and transport to a scrap metal collection or recycling facility, in accordance with the Waste Management Plan.

3.1.7 Irrigation Pumps, Electrical Equipment and Fixtures

Remove irrigation pumps, pump motors, motor controllers, and operating and control equipment that are attached to the driven equipment. Salvage wiring systems and components. Irrigation pumps, pump motors, motor controllers, and operating and control equipment become the property of the Contractor.

3.1.8 Electrical Devices

Remove switches, switchgear, transformers, conductors including wire and nonmetallic sheathed and flexible armored cable, regulators, meters, instruments, plates, circuit breakers, panelboards, outlet boxes, and similar items.

3.1.9 Wiring Ducts or Troughs

Remove wiring ducts or troughs. Dismantle plug-in ducts and wiring troughs into unit lengths.

3.1.10 Items With Unique/Regulated Disposal Requirements

Remove and dispose of items with unique or regulated disposal requirements in the manner dictated by law or in the most environmentally responsible manner.

3.2 CONCURRENT EARTH-MOVING OPERATIONS

Do not begin excavation, filling, and other earth-moving operations that are sequential to demolition work in areas occupied by structures to be demolished until all demolition in the area has been completed and debris removed. Fill holes, open basements and other hazardous openings.

3.3 DISPOSITION OF MATERIAL

3.3.1 Title to Materials

All materials and equipment removed and not reused or salvaged, shall become the property of the Contractor and shall be removed from District property. Title to materials resulting from demolition, and materials and equipment to be removed, is vested in the Contractor upon approval by the District of the Contractor's demolition and removal procedures, and authorization by the District to begin demolition. The District will not be responsible for the condition or loss of, or damage to, such property after contract award. Showing for sale or selling materials and equipment on site is prohibited.

3.3.2 Disposal of Ozone Depleting Substance (ODS)

Class I and Class II ODS are defined in Section, 602(a) and (b), of The Clean Air Act. Prevent discharge of Class I and Class II ODS to the atmosphere. Place recovered ODS in cylinders meeting AHRI Guideline K suitable for the type ODS (filled to no more than 80 percent capacity) and provide appropriate labeling. Recovered ODS shall be removed from District property and disposed of in accordance with 40 CFR 82.

3.4 CLEANUP

Remove and transport the debris in a manner that prevents spillage on streets or adjacent areas. Conform to local regulations regarding hauling and disposal.

3.5 DISPOSAL OF REMOVED MATERIALS

3.5.1 Regulation of Removed Materials

Dispose of debris, rubbish, scrap, and other nonsalvageable materials resulting from removal operations with all applicable federal, state and local regulations.

3.5.2 Burning on District Property

Burning of materials removed from demolished structures will not be permitted on District property.

3.5.3 Removal from District Property

Transport waste materials removed from demolished structures, except waste soil, from District property for legal disposal. Dispose of waste soil as directed.

3.5.4 Hazardous Materials

If hazardous materials, including fuels, fuel storage and containment areas, fertilizers, pesticides, etc., are encountered during the demolition or other construction operations, the Contractor shall comply with all applicable regulations, laws, and ordinances concerning removal, handling, and protection against exposure or environmental pollution. Notify the District upon discovery of any hazardous materials.

-- End of Section --

SECTION 03 11 15.00 10

CONCRETE FORMWORK AND ACCESSORIES

PART 1 GENERAL

1.1 SCOPE

A. Summary of Work: The Contractor shall provide all labor, materials and equipment for the following:

1. Design and construction of all necessary formwork including the required bracing, supports, scaffolding, shoring, and other falsework to produce cast-in-place concrete in the finished structure within the required tolerances for line, grade dimension and detail.

2. Joints in concrete, complete and in place, in accordance with the Contract Documents. Joints in concrete structures shall be the types defined below and will be permitted only where indicated, unless specifically accepted by the District.

1.2 RELATED WORK SPECIFIED ELSEWHERE

There are other specification sections that relate to this section that are not necessarily cited herein.

Section 01 33 00 SUBMITTAL PROCEDURES

Section 03 31 01.00 10 CAST-IN-PLACE STRUCTURAL CONCRETE FOR CIVIL WORKS

1.3 REFERENCES

The publications listed below form a part of this specification to the extent referenced. The publications are referred to within the text by the basic designation only.

A. Standards or Codes: The edition of the standards of the organizations listed below in effect at the time of the advertisement for bids form a part of this specification to the extent referenced. In the case of a conflict between the requirements of this Section and those of the listed document, the requirements of this Section shall prevail.

AMERICAN CONCRETE INSTITUTE INTERNATIONAL (ACI)

ACI 347	(2004) Guide to Formwork for Concrete
ACI 117	(2010; Errata 2011) Specifications for Tolerances for Concrete Construction and Materials and Commentary

ASTM INTERNATIONAL (ASTM)

ASTM A775/A775M	(2017) Standard Specification for Epoxy-Coated Steel Reinforcing Bars

ASTM C920	(2018) Standard Specification for Elastomeric Joint Sealants
ASTM D412	(2016) Standard Test Methods for Vulcanized Rubber and Thermoplastic Elastomers - Tension
ASTM D624	(2000; R 2012) Tear Strength of Conventional Vulcanized Rubber and Thermoplastic Elastomers
ASTM D638	(2014) Standard Test Method for Tensile Properties of Plastics
ASTM D747	(2010) Standard Test Method for Apparent Bending Modulus of Plastics by Means of a Cantilever Beam
ASTM D1056	Standard Specification for Flexible Cellular Materials Spongs or Expanded Rubber
ASTM D1752	(2004a; R 2013) Standard Specification for Preformed Sponge Rubber Cork and Recycled PVC Expansion
ASTM D2000	(2012; R 2017) Standard Classification System for Rubber Products in Automotive Applications
ASTM D2240	(2015; E 2017) Standard Test Method for Rubber Property - Durometer Hardness
ASTM D2241	(2015) Standard Specification for Poly(Vinyl Chloride) (PVC) Pressure-Rated Pipe (SDR Series)

US PRODUCT STANDARDS (PS)

PS-1	Construction and Industrial Plywood for Concrete Forms
PS-20	American Softwood Lumber Standard

NSF INTERNATIONAL (NSF)

NSF/ANSI 61	(2017) Drinking Water System Components - Health Effects

U.S. ARMY CORPS OF ENGINEERS (USACE)

COE CRD-C 572	(1974) Corps of Engineers Specifications for Polyvinylchloride Waterstops

FEDERAL SPECIFICATIONS (Fed. Spec.)

TT-S-0227 E(3)	Sealing Compound, Elastomeric Type, Multicomponent, for Caulking, Sealing, and Glazing Buildings and Other Structures

OCCUPATIONAL SAFETY AND HEALTH ACT (OSHA)

CFR Title 29 Part 1926	Safety and Health Regulations for Construction

1.4 DEFINITIONS

A. Construction Joints:

1. When fresh concrete is placed against a hardened concrete surface, the joint between the two pours is called a construction joint. If indicated on the drawings, joints in water bearing members shall be provided with a waterstop and/or sealant groove of the shape indicated. The surface of the first pour may also be required to receive a coating of bond breaker as indicated.

B. Contraction Joints: Contraction joints are similar to construction joints except that the fresh concrete shall not bond to the hardened surface of the earlier pour, which shall be coated with a bond breaker. The slab reinforcement shall be stopped 4-1/2 inches from the joint, which is provided with a sleeve-type dowel, to allow shrinkage of the concrete of the later pour. Waterstop and/or sealant groove shall also be provided when indicated.

C. Expansion Joints:

1. To allow the concrete to expand freely, a space is provided between the two pours, and the joint shall be formed as indicated. The space is obtained by placing a filler joint material against the earlier pour, to act as a form for the later pour. Unless otherwise indicated, expansion joints in water bearing members shall be provided with a center-bulb type waterstop as indicated.

2. Premolded expansion joint material shall be installed with the edge at the indicated distance below or back from finished concrete surface, and shall have a slightly tapered, dressed, and oiled wood strip secured to or placed at the edge thereof during concrete placement, which shall later be removed to form space for sealing material.

3. The space so formed shall be filled with a joint sealant material as indicated herein. In order to keep the two walls or slab elements in line the joint shall also be provided with a sleeve-type dowel as indicated.

D. Control Joints: The function of the control joint is to provide a weaker plane in the concrete, where shrinkage cracks will probably occur. A groove, of the shape and dimensions indicated, is formed or saw-cut in the concrete. This groove is afterward filled with a joint sealant material.

1.5 SUBMITTALS

Submittals shall be in accordance with Section 01 33 00 SUBMITTAL PROCEDURES.

SD-01 Preconstruction Submittals

Wave Wall Anchor Installation Plan

SD-02 Shop Drawings

Waterstops

Formwork shop drawings

Form Removal Schedule

SD-03 Product Data

Preformed Expansion Joint Fillers

Sealant

Waterstops

Form Materials product data

Form Release Agent

Hydrophilic Waterstop

Bond Breaker

SD-04 Samples

Field-Molded Type

Waterstops

Splicing Waterstops

Sample Panels

Backer Rods

Neoprene Sponge

Bearing Pads

Joint Filler

Mitered cross and a tee constructed of each size or shape of material

SD-05 Design Data

Calculations

SD-06 Test Reports

Wave Wall Type 1 Anchor Test Results

Wave Wall Type 2 Anchor Test Results

SD-07 Certificates

Preformed Expansion Joint Fillers

Sealant

Waterstops

1.6 SUBMITTAL REQUIREMENTS

A. Falsework Calculations and Drawings; The contractor shall submit Calculations and drawings prepared and sealed by a Professional Civil Engineer registered in the State of Florida, which indicate the falsework complies with the requirements of OSHA CFR Title 29 Part 1926.703. The submission of design details and calculations for falsework is for information only.

B. The plans of falsework proposed to be used shall be in sufficient detail to indicate the general layout, sizes of members, anticipated stresses, grade of materials to be used in the falsework, means of protecting existing construction which supports falsework, and typical soil conditions.

C. The Contractor shall submit placement drawings showing the location and type of all joints for each structure.

D. Prior to production of the waterstop materials required under this Section, qualification samples of waterstops shall be submitted which represent in all respects the material proposed. Such samples shall consist of extruded or molded sections of each size or shape to be used. The balance of the material to be used shall not be produced until after the District has reviewed the qualification samples.

E. Prior to use of the waterstop material in the field, a sample of a prefabricated (shop made fitting) mitered cross and a tee constructed of each size or shape of material to be used shall be submitted. These samples shall be prefabricated (shop made fitting) so that the material and workmanship represent in all respects the fittings to be provided. Field samples of prefabricated (shop made fitting) fittings (crosses, tees, etc.) may also be selected at random by the District for testing by a laboratory at the District's expense. When tested, tensile strength across the joints shall be at least 1120 psi.

F. The Contractor shall submit Manufacturer's information demonstrating compliance with requirements for the following:

1. Form ties and related accessories, including taper tie plugs, if taper ties are used

2. Form gaskets

3. Form release agent, including NSF certification if not using mineral oil

4. List of form materials and locations for use

5. Bearing Pads

6. Neoprene Sponge

7. Preformed Expansion Joint Fillers

8. Backing Rod

9. Bond Breaker

10. Waterstops

11. Slip Dowels

12. PVC Tubing

1.7 QUALIFICATIONS

Every person responsible for waterstop installation is required to have a current individual Certification from the waterstops Manufacturer on file with the District, which states said individuals are certified and trained to install waterstop per Manufacturer's recommendations and specifications.

1.8 RESPONSIBILITIES

A. The Contractor is fully responsible for the design and construction of all forms and falsework to be in compliance with all applicable OSHA requirements, and the requirements of all agencies having jurisdiction on the project. The submission of design details and calculations for falsework is for information only.

B. The Contractor shall prepare adhesion and cohesion test specimens for construction joint sealant as required herein, at intervals of 5 working days while sealants are being installed.

C. The sealant material shall show no signs of adhesive or cohesive failure when tested in accordance with the following procedure in laboratory and field tests:

1. Sealant specimen shall be prepared between 2 concrete blocks (1-inch by 2-inch by 3-inch). Spacing between the blocks shall be 1-inch. Coated spacers (2-inch by 1-1/2-inch by 1/2-inch) shall be used to insure sealant cross-sections of 1/2-inch by 2 inches with a width of 1-inch.

2. Sealant shall be cast and cured according to Manufacturer's recommendations except that curing period shall be not less than 24 hours.

3. Following curing period, the gap between blocks shall be widened to 1-1/2-inch. Spacers shall be used to maintain this gap for 24 hours prior to inspection for failure.

1.9 CERTIFICATIONS

A. Form materials, which may remain or leave residues on or in the concrete, shall be certified as compliant with NSF 61.

B. Joint materials shall be certified as compliant with NSF 61.

C. The Contractor shall submit certified test reports from the sealant Manufacturer on the actual batch of material being supplied indicating compliance with requirements herein before the sealant is used on the job.

D. The Contractor shall provide copies of the Waterstops Welding Certifications provided by Manufacturer or authorized agent of Manufacturer for every person who is to be involved with waterstop installation.

1.10 INSPECTIONS

A. Falsework shall be inspected for conformance with the accepted submittal. No workers will be allowed to use falsework for access and no concrete placement to related forms will be permitted until the falsework is inspected by the Contractor for conformance with the submittals and appropriately tagged. No variations or alterations to falsework, as compared to the reference submittal, will be allowed without certification of the variation by the original Professional Engineer.

B. All waterstop field joints shall be subject to rigid inspection, and no such Work shall be scheduled or started without having made prior arrangements with the District for the required inspections. Not less than 24 hours advance notice shall be given for scheduling such inspections.

C. Field joints in waterstops shall be subject to rigid inspection for misalignment, bubbles, inadequate bond, porosity, cracks, offsets, and other defects, which would reduce the potential resistance of the material to water pressure at any point. Defective joints shall be replaced with material, which passes inspection; faulty material shall be removed from the site and properly disposed of.

D. The following waterstop defects represent a partial list of defects which shall be grounds for rejection:

1. Offsets at joints greater than 1/16-inch or 15 percent of material thickness, at any point, whichever is less

2. Exterior crack at joint, due to incomplete bond, which is deeper than 1/16-inch or 15 percent of material thickness, at any point, whichever is less

3. Any combination of offset or exterior crack which will result in a net reduction in the cross section of the waterstop in excess of 1/16-inch or 15 percent of material thickness at any point, whichever is less

4. Misalignment of joint which results in misalignment of the waterstop in excess of 1/2-inch in 10 feet

5. Porosity in the welded joint as evidenced by visual inspection

6. Bubbles or inadequate bonding which can be detected with a penknife test (If, while prodding the entire joint with the point of a penknife, the knife breaks through the outer portion of the weld into a bubble, the joint shall be considered defective.)

7. Visible signs of separation when the cooled splice is bent by hand at any sharp angle

8. Any evidence of burned material

1.11 WARRANTY

The warranty shall met the requirements specified in SECTION 01 61 03 EQUIPMENT AND MATERIALS.

1.11.1 SAMPLE PANELS

Provide Sample Panels of sufficient size to contain joints and not less than 6 feet long and 4 feet wide. The panels shall be of typical wall thickness and constructed containing the full allocation of reinforcing steel that will be used in the structure, with the forming system that duplicates in every detail the one that will be used in construction of the structure. Use the same concrete mixture proportion and materials, the same placement techniques and equipment, and the same finishing techniques and timing that are planned for the structure. At least two tie holes shall be cast into the panel for repair examples. Construction of a Surface Finish 3.0 (SF 3.0) will not be permitted until sample panels have been approved. Protect sample panels from construction operations in a manner to protect approved finish, and are not to be removed until all surface finish SF-3.0 concrete has been accepted. After shop drawings have been reviewed, submit sample panels for a surface finish SF-3.0 with applied architectural treatment; build panels on the project site where directed.

PART 2 PRODUCTS

2.1 FORM AND FALSEWORK MATERIALS

A. Except as otherwise expressly accepted by the District, lumber brought on the Site for use as forms, shoring, or bracing shall be new material. Forms shall be smooth surface forms and shall be of the following materials:

Walls	Steel, fiberglass, or plywood panel
Columns	Steel, plywood, PVC, fiberglass, or spiral wound fiber forms
Roof and floor	Plywood
All other work	Steel panels, fiberglass, or plywood

B. Materials for concrete forms, formwork, and falsework shall conform to the following requirements. Submit form materials product data for District review:

1. Plywood shall be new, waterproof, synthetic resin bonded, exterior type, manufactured especially for concrete formwork and shall conform to Plyform Class I, B-B EXT, of PS-1, and shall be edge sealed.

2. Lumber shall be Douglas Fir or Southern Yellow Pine, construction grade or better, in conformance with PS-20.

3. Form materials shall be metal, wood, plywood, or other material that will not adversely affect the concrete and will facilitate placement of concrete to the shape, form, line, and grade indicated. Metal forms

shall accomplish such results. Wood forms for surfaces to be painted shall be Medium Density Overlaid plywood, MDO EXT Grade.

C. Unless otherwise indicated, exterior corners in concrete members shall be provided with 3/4-inch chamfers or be tooled to 1/2-inch radius. Re-entrant corners in concrete members shall not have fillets unless otherwise indicated.

D. Forms and falsework to support the roof and floor slabs shall be designed in accordance with ACI 347. Submit formwork shop drawings for District review.

2.2 FORM TIES

A. Ties shall be standard crimped snap ties with one-inch (1 inch) snapback. Ties shall be provided with a plastic cone or other suitable means for forming a conical hole to insure that the form tie may be broken off back of the face of the concrete. The maximum diameter of removable cones for rod ties, or of other removable form-tie fasteners having a circular cross-section, shall not exceed 1-1/2 inches; and all such fasteners shall be such as to leave holes of regular shape for reaming. Form ties for water-retaining structures shall have integral waterstops that tightly fit the form tie so that they cannot be moved from mid-point of the tie.

B. Removable taper ties may be used when approved by the District. A preformed neoprene or polyurethane tapered plug sized to seat at the center of the wall shall be inserted in the hole left by the removal of the taper tie.

2.3 FORM RELEASING AGENT

Form release agent shall be non-staining and shall leave no residues on or in the concrete unless certified as compliant with NSF/ANSI 61 and shall not adversely affect the adhesion of paint or other coatings. Submit Product Data on the form Release Agent 30 days before use.

2.4 WATERSTOPS

A. PVC Waterstops:

1. PVC Waterstops shall be extruded from an elastomeric polyvinyl chloride compound containing the plasticizers, resins, stabilizers, and other materials necessary to meet the requirements of this Section. No reclaimed or scrap material shall be used. The Contractor shall obtain from the waterstop Manufacturer and shall furnish to the District for review, current test reports and a written certification of the Manufacturer that the material to be shipped to the job meets the physical requirements as outlined in the USACE COE CRD-C 572, and those listed herein.

2. Flatstrip and Center-Bulb Waterstops: The thickness of waterstops, including the center bulb, shall not be less than 3/8-inch. Waterstop shall be provided with factory installed hog rings at 12 inches on centers along the waterstop.

3. Multi-Rib Waterstops: Multi-rib waterstops where required shall have prefabricated (shop made fitting) joint fittings at all intersections of the ribbed-type waterstops.

4. Retrofit Waterstops: Retrofit waterstops and batten bars shall be manufactured as a complete system including waterstop, SS batten bar, SS anchor bolts, and epoxy gel.

5. Waterstop Testing Requirements: When tested in accordance with the test standards, the waterstop material shall meet or exceed the following requirements:

Property	**Value**	**ASTM Standard**
Physical Property, Sheet Material		
Tensile Strength-min (psi)	2000	ASTM D638, Type IV
Ultimate Elongation-min (percent)	350	ASTM D638, Type IV
Low Temp Brittleness-max (degrees F)	-35	ASTM D746
Stiffness in Flexure-min (psi)	600	ASTM D747
Accelerated Extraction (CRD-C572)		
Tensile Strength-min (psi)	1500	ASTM D638, Type IV
Ultimate Elongation-min (percent)	300	ASTM D638, Type IV
Effect of Alkalies (CRD-C572)		
Change in Weight (percent)	+ 0.25/- 0.10	------
Change in Durometer, Shore A	+/- 5	ASTM D2240
Finish Waterstop		
Tensile Strength-min (psi)	1400	ASTM D638, Type IV
Ultimate Elongation-min (percent)	280	ASTM D638, Type IV

B. Pre-formed Hydrophilic Waterstops:

1. Hydrophilic (bentonite-free) waterstops shall be the type that expands in the presence of water to form a watertight joint seal without damaging the concrete in which it is cast. It shall be a polymer modified chloroprene rubber conforming to ASTM D412 as follows.

2. Waterstop shall be manufactured from chloroprene rubber and modified chloroprene rubber with hydrophilic properties. Waterstop shall have a delay coating to inhibit initial expansion due to moisture present in fresh concrete. The minimum expansion ratio of modified chloroprene shall be not less than 2 to 1 volumetric change in distilled water at 70 degrees F (21 degrees C). Submit Product Data for Hydrophilic Waterstop, if used.

3. Hydrophilic Waterstop shall meet the following minimum requirements:

Property	Value	ASTM Standard
Physical Property, Chloroprene		
Tensile Strength-min (psi)	1275	ASTM D412
Ultimate Elongation-min (percent)	350	ASTM D412
Hardness, shore A	55+/a 5	ASTM D2240
Physical Property, Modified Chloroprene		
Tensile Strength-min (psi)	300	ASTM D412
Ultimate Elongation-min (percent)	600	ASTM D412
Hardness, Shore A	55 +/- 5	ASTM D2240

4. Bonding agent for hydrophilic waterstop shall be the Manufacturer's recommended adhesive for wet, rough concrete.

5. Hydrophilic Waterstop may not be substituted for PVC waterstop without prior permission fromt he District.

C. Other Types of Waterstops:

1. When types of waterstops not listed above are indicated, they shall be subjected to the same requirements as those listed herein.

2.5 JOINT SEALANT FOR WATER BEARING JOINTS

A. Joint sealant shall be polyurethane polymer designed for bonding to concrete, which is continuously submerged in water. No material will be acceptable which has an unsatisfactory history as to bond or durability when used in the joints of water retaining structures.

B. Joint sealant material shall meet the following requirements (73 degrees

Requirement	Value	ASTM Standard
Work Life (minutes)	45 - 180	-----
Time to Reach 20 Shore "A" Hardness (at 77 degrees F, 200 gr quantity) - max (hours)	24	-----
Ultimate Hardness	20 - 45 Shore "A"	ASTM D2240
Tensile Strength - min (psi)	175	ASTM D412
Ultimate Elongation - min (percent)	400	ASTM D412
Tear Resistance - min (pounds per inch of thickness)	75	ASTM D624
Color	Light Gray	-----

C. Polyurethane sealants for waterstop joints in concrete and precast building joints shall conform to the following requirements:

1. Sealant shall be 2-part polyurethane with the physical properties of the cured sealant conforming to or exceeding the requirements of ASTM C920, or TT-S-0227 E(3) for 2-part material, as applicable.

2. For vertical joints and overhead horizontal joints, only "non-sag" compounds shall be used; all such compounds shall conform to the requirements of ASTM C 920 Class 25, Grade NS, or TT-S-0227 E(3), Type II, Class A.

3. For plane horizontal joints, the self-leveling compounds which meet the requirements of ASTM C 920 Class 25, Grade P, or TT-S-0227 E(3), Type I shall be used. For joints subject to either pedestrian or vehicular traffic, a compound providing non-tracking characteristics, and having a Shore "A" hardness range of 35 to 45, shall be used.

4. Primer materials, if recommended by the sealant Manufacturer, shall conform to the printed recommendations of the Manufacturer.

5. Submit manufacturer's product data for sealant.

2.6 JOINT MATERIALS

A. Bearing Pad: Bearing pad shall be neoprene conforming to ASTM D2000, BC 420, 40 durometer hardness unless otherwise indicated. Submit samples of bearing pads.

B. Neoprene Sponge: Sponge shall be neoprene, closed-cell, expanded, conforming to ASTM D1056, Type 2C5-E1 Submit samples of neoprene sponge.

C. Joint Filler

1. Joint filler for expansion joints in waterholding structures shall be neoprene conforming to ASTM D1056, Type 2C5-E1.

2. Joint filler material in other locations shall be of the preformed non-extruding type joint filler constructed of cellular neoprene sponge rubber or polyurethane of firm texture. Bituminous fiber type will not be permitted. All non-extruding and resilient-type preformed expansion joint fillers shall conform to the requirements and tests set forth in ASTM D1752, for Type I, except as otherwise indicated.

3. Submit samples of joint filler.

2.7 BACKING ROD

Backing rod shall be an extruded closed-cell, polyethylene foam rod. The material shall be compatible with the joint sealant material and shall have a tensile strength of not less than 40 psi and a compression deflection of approximately 25 percent at eight (8) psi. The rod shall be 1/8-inch larger in diameter than the joint width except that a one-inch diameter rod shall be used for a 3/4-inch wide joint. Submit samples of backer rods.

2.8 BOND BREAKER

A. Bond breaker shall contain a fugitive dye so that areas of application will be readily distinguishable. Submit Bond Breaker Product Data.

B. Bonding agent for hydrophilic waterstop shall be the Manufacturer's recommended adhesive for wet, rough concrete.

2.9 SLIP DOWELS

Slip dowels in joints shall be smooth epoxy-coated bars, conforming to ASTM A775/A775M.

2.10 PVC TUBING

PVC tubing in joints shall be Schedule SDR 13.5, conforming to ASTM D2241.

2.11 CHAMFER STRIP

Provide three quarter inch triangular fillets, milled clear straight grained wood, surfaced each side, or extruded vinyl type, with or without nail flange to form all exposed concrete edges such as columns, pilasters, beams, curbs, equipment pads, tops of walls, and as indicated. Unless otherwise indicated, exterior corners in concrete members shall be provided with 3/4 chamfers. Re-entrant corners in concrete members shall not have fillets, unless otherwise indicated.

PART 3 EXECUTION

3.1 FORMS

A. Forms shall conform to the shape, lines, and dimensions as shown on the Drawings and shall be substantial and sufficiently tight to prevent leakage. Forms shall be properly braced or tied so as to maintain position and shape. Plumb and string lines shall be installed before concrete placement and shall be maintained during placement. Such lines shall be used by Contractor's personnel and by the District and shall be in sufficient number and properly installed. During concrete placement, the Contractor shall continually monitor plumb and string line form positions and immediately correct deficiencies.

B. The Contractor shall be fully responsible for the adequacy of the formwork in its entirety and any forms that are unsafe or inadequate in any respect shall promptly be removed from the WORK and replaced. The Contractor shall provide worker protection from protruding reinforcement bars in accordance with applicable safety codes.

C. The Contractor may reuse forms only if in good condition and only if acceptable to the District. Reused forms shall be thoroughly cleaned and may require light sanding between uses to obtain a uniform surface texture on all exposed concrete surfaces. Forms shall not be reused if they have developed defects that would affect the surface texture of exposed concrete. Exposed concrete surfaces are defined as surfaces, which are permanently exposed to view. In the case of forms for the inside wall surfaces of hydraulic/water retaining structures, unused tie rod holes in forms shall be covered with metal caps or shall be filled by other methods acceptable to the District.

D. Forms shall be sufficiently tight to prevent leakage. Forms shall be properly braced or tied together to maintain their position and shape under a load of freshly-placed concrete. If adequate foundation for shores cannot be secured, trussed supports shall be provided.

E. Immediately before the placing of reinforcing, faces of all forms in contact with concrete shall receive a thorough coating of form release

agent. Any excess agent shall be satisfactorily removed before placing concrete. If using mineral oil, the Contractor shall oil the forms at least two weeks in advance of their use. Care shall be exercised to keep oil/release agent off the surfaces of steel reinforcement and other items to be embedded in concrete.

F. The Contractor shall supply sufficient number of forms of each kind to permit the required rate of progress to be maintained.

G. The design and inspection of concrete forms, falsework, and shoring shall comply with applicable local, state, and Federal regulations.

3.2 WATERSTOPS

A. Waterstops shall be embedded in the concrete across joints as indicated. Waterstops shall be fully continuous for the extent of the joint. Splices necessary to provide such continuity shall be accomplished in conformance to printed instructions of Manufacturer of the waterstops. The Contractor shall take suitable precautions and means to support and protect the waterstops during the progress of the WORK and shall repair or replace at its own expense any waterstops damaged during the progress of the WORK. Waterstops shall be stored so as to permit free circulation of air around the waterstop material.

B. When any waterstop is installed in the concrete on one side of a joint, while the other half or portion of the waterstop remains exposed to the atmosphere for more than 2 days, suitable precautions shall be taken to shade and protect the exposed waterstop from direct rays of the sun during the entire exposure and until the exposed portion of the waterstop is embedded in concrete.

3.3 SPLICES IN PVC WATERSTOPS

A. Splices in PVC waterstops shall be performed by heat sealing the adjacent waterstop sections in accordance with the Manufacturer's printed recommendations. It is essential that:

1. The material not be damaged by heat sealing.

2. The splices have a tensile strength of not less than 80 percent of the unspliced material tensile strength.

3. The continuity of the waterstop ribs and of its tubular center axis be maintained. No edge welding is allowed.

B. Butt joints of the ends of 2 identical waterstop sections may be made while the material is in the forms.

C. All joints with waterstops involving more than 2 ends to be jointed together, and all joints which involve an angle cut, alignment change, or the joining of 2 dissimilar waterstop sections shall be prefabricated (shop made fitting) prior to placement in the forms, allowing not less than 24-inch long strips of waterstop material beyond the joint. Submit samples of Field-Molded Type of waterstop joints and splicing waterstops for District review. Upon being inspected and approved, such prefabricated (shop made fitting) waterstop joint assemblies shall be installed in the forms and the

ends of the 24-inch strips shall be butt welded to the straight run portions of waterstop in place in the forms.

D. Where a centerbulb waterstop intersects and is jointed with a non-centerbulb waterstop, care shall be taken to seal the end of the centerbulb, using additional PVC material if needed.

3.4 FORM DESIGN

A. Forms shall be true in every respect to the required shape and size, shall conform to the established alignment and grade, and shall be of sufficient strength and rigidity to maintain their position and shape under the loads and operations incident to placing and vibrating the concrete. Suitable and effective means shall be provided on all forms for holding adjacent edges and ends of panels and sections tightly together and in accurate alignment so as to prevent the formation of ridges, fins, offsets, or similar surface defects in the finished concrete.

B. Plywood, 5/8-inch and greater in thickness, may be fastened directly to studding if the studs are spaced close enough to prevent visible deflection marks in the concrete. The forms shall be tight so as to prevent the loss of water, cement, and fines during placing and vibrating of the concrete. Specifically, the bottom of wall forms that rest on concrete footings or slabs shall be provided with a gasket to prevent loss of fines and paste during placement and vibration of concrete. Such gasket may be a 1- to 1-1/2-inch diameter polyethylene rod held in position to the underside of the wall form.

C. The Contractor shall provide adequate clean-out holes at the bottom of each lift of forms. The size, number, and location of such clean-outs shall be as acceptable to the District. Whenever concrete cannot be placed from the top of a wall form in a manner that meets the requirements of the Contract Documents, form windows shall be provided in the size and spacing needed to allow placement of concrete to the requirements of Section 03 31 01.00 10 CAST-IN-PLACE STRUCTURAL CONCRETE FOR CIVIL WORKS. The size, number, and location of such form windows shall be as acceptable to the District.

3.5 FORM CONSTRUCTION

A. Vertical Surfaces: All vertical surfaces of concrete members shall be formed, except where placement of the concrete against the ground is indicated. Not less than 1-inch of concrete shall be added to the indicated thickness of a concrete member, where concrete is permitted to be placed against trimmed ground, in lieu of forms. Permission to do this on other concrete members will be granted only for members of comparatively limited height and where the character of the ground is such that it can be trimmed to the required lines and will stand securely without caving or sloughing until the concrete has been placed.

B. Construction Joints: Concrete construction joints will not be permitted at locations other than those indicated, except as may be acceptable to the District. When a second lift is placed on hardened concrete, special precautions shall be taken in the way of the number, location, and tightening of ties at the top of the old lift and bottom of the new to prevent any unsatisfactory effect whatsoever on the concrete. Pipe stubs and anchor bolts shall be set in the forms where required.

C. Form Ties

1. Embedded Ties: Holes left by the removal of form tie cones shall be reamed with suitable toothed reamers so as to leave the surface of the holes clean and rough before being filled with mortar. Wire ties for holding forms will not be permitted. No form-tying device or part thereof, other than metal, shall be left embedded in the concrete. Ties shall not be removed in such manner as to leave a hole extending through the interior of the concrete members. The use of snap-ties, which cause spalling of the concrete upon form stripping or tie removal, will not be permitted. If steel panel forms are used, rubber grommets shall be provided where the ties pass through the form in order to prevent loss of cement paste. Where metal rods extending through the concrete are used to support or to strengthen forms, the rods shall remain embedded and shall terminate not less than 1-inch back from the formed face or faces of the concrete.

2. Removable Ties: Where taper ties are approved for use, the larger end of the taper tie shall be on the wet side of walls in water retaining structures. After the taper tie is removed, the hole shall be thoroughly cleaned and roughened for bond. A precast neoprene or polyurethane tapered plug shall be located at the wall centerline. The hole shall be completely filled with non-shrink grout for water bearing and below-grade walls. The hole shall be completely filled with non-shrink or regular cement grout for above-grade walls, which are dry on both sides. Exposed faces of walls shall have the outer 2 inches of the exposed face filled with a cement grout, which shall match the color and texture of the surrounding wall surface.

3.6 JOINT CONSTRUCTION

A. Setting Waterstops:

1. In order to eliminate faulty installation that may result in joint leakage, the Contractor shall be particularly careful to get the correct positioning of the waterstops during installation. Adequate provisions must be made to support and anchor the waterstops during the progress of the WORK and to insure the proper embedment in the concrete. The symmetrical halves of the waterstops shall be equally divided between the concrete pours at the joints. The center axis of the waterstops shall be coincident with the joint openings. Maximum density and imperviousness of the concrete shall be insured by thoroughly working it in the vicinity of all joints.

2. In placing PVC waterstops in the forms, the Contractor shall provide means to prevent the waterstop from being folded over by the concrete as it is placed. Waterstops shall be held in place with light wire ties on 12-inch centers which shall be passed through hog rings at the edge of the waterstop and tied to the curtain of reinforcing steel. Horizontal waterstops, with their flat face in a vertical plane, shall be held in place with continuous supports to which the top edge of the waterstop shall be tacked. In placing concrete around horizontal waterstops, with their flat face in a horizontal plane, the Contractor shall work concrete under the waterstops by hand so as to avoid the formation of air and rock pockets.

3. In placing centerbulb waterstops in expansion joints, the centerbulb shall be centered on the joint filler material.

4. Waterstop in vertical wall joints shall stop 6 inches from the top of the wall where such waterstop does not connect with any other waterstop and is not to be connected to a future concrete placement.

B. Joint Location:

1. Construction joints and other types of joints shall be provided where indicated. When not indicated, construction joints shall be provided at 25-foot maximum spacing for all concrete construction. Where joints are indicated spaced greater than 40 feet apart, additional joints shall be provided to maintain the 25-foot maximum spacing. The location of all joints, of any type, shall be submitted for acceptance by the District.

C. Joint Preparation:

1. The Contractor shall take special care in preparing concrete surfaces at joints where bonding between 2 sections of concrete is required. Unless otherwise indicated, such bonding will be required at all horizontal joints in walls. Surfaces shall be prepared in accordance with the requirements of Section 03 31 01.00 10 CAST-IN-PLACE STRUCTURAL CONCRETE FOR CIVIL WORKS. Except on horizontal wall construction joints, wall to slab joints, or where otherwise indicated, at all joints where waterstops are required, the joint face of the first pour shall be coated with a bond breaker as indicated herein.

D. Retrofit Joint Preparation:

1. Existing surfaces to receive a retrofit waterstop shall be clean and free from any loose or foreign material. Surface shall be given a light sandblast or hydroblast finish to 1/8-inch amplitude prior to application of epoxy and waterstop.

E. Construction Joint Sealant:

1. Construction joints in water-bearing floor slabs, and elsewhere as indicated, shall be provided with tapered grooves which shall be filled with a construction joint sealant. The material used for forming the tapered grooves shall be left in the grooves until just before the grooves are cleaned and filled with joint sealant. After removing the forms from the grooves, all laitance and fins shall be removed, and the grooves shall be sandblasted. The grooves shall be allowed to become thoroughly dry, after which they shall be blown out; immediately thereafter, they shall be primed, bond breaker tape placed in the bottom of the groove, and filled with the construction joint sealant. The primer shall be furnished by the sealant Manufacturer. No sealant will be permitted to be used without a primer. Care shall be used to completely fill the sealant grooves. Areas designated to receive a sealant fillet shall be thoroughly cleaned, as outlined for the tapered grooves, prior to application of the sealant.

2. The primer and sealant shall be placed strictly in accordance with the printed recommendations of the Manufacturer, taking special care to properly mix the sealant prior to application. The sides of the

sealant groove shall not be coated with bond breaker, curing compound, or any other substance which would interfere with proper bonding of the sealant. Sealant shall achieve final cure at least 7 days before the structure is filled with water.

3. Sealant shall be installed by a competent waterproofing specialty contractor who has a successful record of performance in similar installations.

4. Thorough, uniform mixing of 2-part, catalyst-cured materials is essential; special care shall be taken to properly mix the sealer before its application. Before any sealer is placed, the Contractor shall arrange to have the crew doing the Work carefully instructed on the proper method of mixing and application by a representative of the sealant Manufacturer.

5. Any joint sealant which fails to fully and properly cure after the Manufacturer's recommended curing time for the conditions of the Work hereunder shall be completely removed; the groove shall be thoroughly sandblasted to remove all traces of the uncured or partially cured sealant and primer, and shall be re-sealed with the indicated joint sealant. Costs of such removal, joint treatment, re-sealing, and appurtenant Work shall be the Contractor's responsibility.

F. Hydrophilic Waterstop

1. Where a hydrophilic waterstop is called for in the Contract Documents, it shall be installed with the Manufacturer's instructions and recommendations except as modified herein.

2. When requested by the District, the Contractor shall arrange for the Manufacturer to furnish technical assistance in the field.

3. Hydrophilic waterstop shall only be used where complete confinement by concrete is provided. Hydrophilic waterstop shall not be used in expansion or contraction joints or in the first 6 inches of any non-intersecting joint.

4. The hydrophilic waterstop shall be located as near as possible to the center of the joint and it shall be continuous around the entire joint. The minimum distance from the edge of the waterstop to the face of the member shall be 5 inches.

5. Where the thickness of the concrete member to be placed on the hydrophilic waterstop is less than 12 inches, the waterstop shall be placed in grooves formed or ground into the concrete. The groove shall be at least 3/4 inch deep and 1-1/4 inches wide. When placed in the groove, the minimum distance from the edge of the waterstop to the face of the member shall be 2.5 inches.

6. Where a hydrophilic waterstop is used in combination with PVC waterstop, the hydrophilic waterstop shall overlap the PVC waterstop for a minimum of 6 inches and shall be adhered to PVC waterstop with single component water-swelling sealant as recommended by Manufacturer.

7. The hydrophilic waterstop shall not be installed where the air temperature falls outside the Manufacturer's recommended range.

8. The concrete surface under the hydrophilic waterstop shall be smooth and uniform. The concrete shall be ground smooth if needed. Alternately, the hydrophilic waterstop shall be bonded to the surface using an epoxy grout which completely fills all voids and irregularities beneath the waterstop material. Prior to installation, the concrete surface shall be wire brushed to remove any laitance or other materials that may interfere with the bonding of epoxy.

9. The hydrophilic waterstop shall be secured in place with concrete nails and washers at 12-inch maximum spacing. This shall be in addition to the adhesive recommended by the Manufacturer

G. Retrofit Waterstop:

1. Retrofit waterstops shall be set in a bed of epoxy over a sandblasted surface with stainless steel batten bars and 1/4-inch diameter stainless steel anchors at 6 inches on center, staggered, and in accordance with the Manufacturer's written recommendations.

3.7 REMOVAL OF FORMS

A. Careful procedures for the removal of forms shall be strictly followed, and this Work shall be done with care so as to avoid injury to the concrete or workers. In the case of roof slabs and above-ground floor slabs, forms shall remain in place until test cylinders for the roof concrete attain a minimum compressive strength of 75 percent of the 28-day strength (0.75f'c) in Section 03 31 01.00 10 CAST-IN-PLACE STRUCTURAL CONCRETE FOR CIVIL WORKS. No forms shall be disturbed or removed under an individual panel or unit before the concrete in all the adjacent panels or units have attained 0.75f'c strength and have been in place for a minimum of 7 days. The time required to establish said strength shall be determined by the DISTRICT, who will make several test cylinders for this purpose from concrete used in the first group of roof panels placed. If the time so determined is more than the 7-day minimum, then that time shall be used as the minimum length of time. Forms for vertical walls of waterholding structures shall remain in place at least 36 hours after the concrete has been placed.

B. Forms for parts of the Work not specifically mentioned herein shall remain in place for periods of time as recommended in ACI 347. Submit Form Removal Schedule for District review.

3.8 FALSEWORK

A. The Contractor shall be responsible for the design, engineering, construction, maintenance, and safety of all falsework, including staging, walkways, forms, ladders, and similar appurtenances, which shall equal or exceed the applicable requirements of the provisions of the OSHA Safety and Health Standards for Construction, and the requirements herein.

B. The Contractor shall design and construct falsework to provide the necessary rigidity and to support the loads. Falsework for the support of a superstructure shall be designed to support the loads that would be imposed if the entire superstructure were placed at one time.

C. The Contractor shall place falsework upon a solid footing, safe against undermining, and protected from softening. When the falsework is supported

on timber piles, the maximum calculated pile loading shall be as recommended by the Contractor's geotechnical engineer and shall not exceed 20 tons. When falsework is supported on any portion of the structure which is already constructed, the load imposed by the falsework shall be spread, distributed, and braced in such a way as to avoid any possibility of damage to the structure.

3.9 TOLERANCES

A. The variation from plumb, level and required lines shall not exceed 1/4-inch in any ten feet (10) of length, non cumulative, and there shall be no offsets or visible waviness in the finished surface. All other tolerances shall be within the tolerances of ACI 117 - Standard Tolerances for Concrete Construction and Materials.

3.10 WAVE WALL ANCHOR TEST

A. Embed Type 1 Wave Wall Anchor into Soil Cement as indicated in "Type 1 Anchor Detail" on the drawings and subject to a combined shear load of 2.803 kips and tension load of 3.988 kips.

B. Embed Type 2 Wave Wall Anchor into Soil Cement as shown in "Type 2 Anchor Detail" on drawings and subject to a combined shear load of 7.539 kips and tension load of 1766.834 kips.

C. The Soil Cement shall have a strength of f'c = 300 psi, the Self-Consolidating Concrete shall have a strength of 4,000 psi and the loads shall be applied 4-3/4 inches above the top of the Self-Consolidating Concrete.

D. Anchor failure shall be considered as any permanent deformation of the anchor, anchor pull out from the Soil Cement, anchor blow out from the Soil Cement or any lateral movement of the top of the anchor during the testing greater than 1/4 inch.

Contractor shall submit Wave Wall Type 1 Anchor Test Results and Wave Wall Type 2 Anchor Test Results indicating the results of the shear and tension load application to both wall types.

3.11 WAVE WALL ANCHOR INSTALLATION PLAN

A. Contractor shall submit a Wave Wall Anchor Installation Plan and demonstrate anchor installation procedure for District approval. Installation Plan and Procedure shall include but not be limited to locating anchor holes, hole drilling, hole cleaning, anchor installation and centering, grout/adhesive injection, curing and fastening.

-- End of Section --

SECTION 03 20 00

CONCRETE REINFORCEMENT

PART 1 GENERAL

1.1 SCOPE

A. Summary of Work: The Contractor shall furnish all labor, materials and equipment to provide and properly place all concrete reinforcement steel, welded wire fabric, couplers, and concrete inserts for use in the reinforced concrete and masonry construction and all appurtenant work, including all the wires, clips, supports, chairs, spacers, and other accessories as shown on the Drawings and as specified herein.

1.2 APPLICABLE STANDARDS AND PUBLICATIONS

A. Standards or Codes: The edition of the standards of the organizations listed below in effect at the time of the advertisement for bids form a part of this specification to the extent referenced. See the various paragraphs for the specified standard. In the case of a conflict between the requirements of this Section and those of the listed document, the requirements of this Section shall prevail.

AMERICAN CONCRETE INSTITUTE INTERNATIONAL (ACI)

ACI 117	(2010; Errata 2011) Specifications for Tolerances for Concrete Construction and Materials and Commentary
ACI 301	(2016) Specifications for Structural Concrete
ACI SP-66	(2004) ACI Detailing Manual

ASTM INTERNATIONAL (ASTM)

ASTM A1064/A1064M	(2017) Standard Specification for Carbon-Steel Wire and Welded Wire Reinforcement, Plain and Deformed, for Concrete
ASTM A370	(2017a) Standard Test Methods and Definitions for Mechanical Testing of Steel Products
ASTM A615/A615M	(2016) Standard Specification for Deformed and Plain Carbon-Steel Bars for Concrete Reinforcement

CONCRETE REINFORCING STEEL INSTITUTE (CRSI)

CRSI 10MSP	(2009; 28th Ed; Errata) Manual of Standard Practice

1.3 DEFINITIONS

Not Used

1.4 SUBMITTALS

Submittals shall be in accordance with Section 01 33 00 SUBMITTAL PROCEDURES. The Contractor shall submit the following:

SD-02 Shop Drawings

Reinforcement

SD-03 Product Data

Reinforcing Steel

SD-06 Test Reports

Mill Test Reports

SD-07 Certificates

Reinforcing Steel

Mill Certifications

1.5 QUALIFICATIONS

Not Used

1.6 CERTIFICATIONS

A. International Code Council Evaluation Service (ICC-ES) Certifications for mechanical couplers, if allowed

B. Mill Test Reports of Grade 60 reinforcing steel

1.7 INSPECTION COORDINATION

The Contractor shall provide sufficient notice and opportunity to the District to review the placement of the reinforcing steel before the concrete is placed. The Contractor shall provide access to the Work for the District as requested for inspection. The Contractor shall provide 48 hours advance notice of its intention to begin new Work activities.

1.8 WARRANTY

The Contractor shall warrant the Work against defects for one (1) year from the date of Substantial Completion and as described in Article 13 of Section 00700 GENERAL TERMS AND CONDITIONS.

PART 2 PRODUCTS

2.1 REINFORCING BARS

A. Metal reinforcement shall be deformed type bars conforming to ASTM A615, Specifications for Deformed and Plain Billet-Steel Bars for Concrete Reinforcement, Grade 60, unless otherwise specified. Mill certifications shall be submitted for all reinforcing. Reinforcing steel shall be

fabricated for the shapes and dimensions indicated on the Drawings and in compliance with ACI 318. All bars shall be bent cold. Submit product data for all reinforcing steel including country of origin.

B. Replace all reinforcement with bends and kinks not shown on fabrication Shop Drawings. Remove from job Site all such reinforcing and replace with new fabricated steel. Field bending of reinforcement at the work Site is prohibited.

C. Welded wire fabric reinforcement shall conform to the requirements of ASTM A1064, and the details indicated. Do not use fabric that has been rolled. Install flat sheets only.

D. Spiral reinforcement shall be cold-drawn steel wire conforming to the requirements of ASTM A1064.

E. Mechanical couplers shall be provided where indicated and where approved by the District. The couplers shall develop a tensile strength that exceeds 125 percent of the yield strength of the reinforcement bars being spliced at each splice. Where the type of coupler used is composed of more than one component, all components required for a complete splice shall be provided. This shall apply to all mechanical splices, including those splices intended for future connections. Reinforcement steel and coupler used shall be compatible for obtaining the required strength of the connection. Straight threaded type couplers shall require the use of the next larger size reinforcing bar or shall be used with reinforcing bars with specially forged ends which provide upset threads which do not decrease the basic cross section of the bar.

F. Epoxy for grouting reinforcing bars shall be specifically formulated for such application, for the moisture condition, application temperature, and orientation of the hole to be filled. Epoxy shall meet the requirements in Section 05 50 15 CIVIL WORKS FABRICATIONS.

2.2 ACCESSORIES

All chairs and bolsters shall conform to ACI SP-66 and the CRSI Manual of Standard Practices and shall have galvanized or plastic legs.

2.3 SHOP DRAWINGS

Prepare and submit shop drawings for all reinforcement. Shop drawings shall clearly reference the applicable structure and drawings being constructed. All bends shall be clearly described. Submittals shall be by structure unless some logical break is available. Review is limited to critical attributes such as bar sizes and spacing. Such review does not relieve the contractor of providing reinforcing to match the design intent.

PART 3 EXECUTION

3.1 PLACEMENT AND ANCHORAGE

A. Bar supports shall be spaced in accordance with CRSI 10MP.

1. Reinforcement steel shall be supported by concrete, plastic or metal supports, spacers or metal hangers that are strong and rigid enough to prevent any displacement of the reinforcement steel. Where concrete is

to be placed on the ground, supporting concrete blocks (or dobies) shall be used in sufficient numbers to support the bars without settlement, but in no case shall such support be continuous. Concrete blocks used to support reinforcement steel shall be tied to the steel with wire ties that are embedded in the blocks. For concrete over formwork, the Contractor shall provide concrete, metal, plastic, or other acceptable bar chairs and spacers.

2. Limitations on the use of bar support materials shall be as follows.

   a. Concrete Dobies: permitted at all locations except where architectural finish is required. No stacking of dobies shall be permitted.

   b. Wire Bar Supports: permitted only at slabs over dry areas, interior non-hydraulic wall surfaces, and exterior wall surfaces.

   c. Plastic Bar Supports: permitted at all locations except on grade.

B. Reinforcement shall be accurately placed in accordance with the Drawings and shall be adequately secured in position with not less than 16-gauge annealed wire. The placement tolerances shall be in accordance with ACI 117, and the CRSI Manual of Standard Practices.

C. Tie wires shall be bent away from the forms in order to provide the required concrete coverage.

D. Bars additional to those indicated which may be found necessary or desirable by the Contractor for the purpose of securing reinforcement in position shall be provided by the Contractor at its own expense.

E. Additional reinforcement around openings:

1. Place an equivalent area of steel around pipe or opening and extend on each side and top and bottom sufficiently to develop bond in each bar.

2. Refer to details on Drawings for bar extension length on each side of opening.

3. Where welded wire fabrics are used, provide extra reinforcing using fabric or deformed bars.

F. Unless otherwise indicated, reinforcement placing tolerances shall be within the limits in ACI 117 except where in conflict with the requirements of the Building Code.

G. Bars may be moved as necessary to avoid interference with other reinforcement steel continuously across the entire width of the reinforcement mat, and shall support the reinforcement mat in the plane indicated.

H. Welded wire fabric placed over the ground shall be supported on wired concrete blocks (dobies) spaced not more than three (3) feet on centers in any direction. Welded wire fabric shall not be placed on the ground and hooked into place in the freshly placed concrete.

I. Welded wire fabric reinforcement placed over horizontal forms shall be supported on slab bolsters. Slab bolsters shall be spaced not more than 30-inches on center. The construction practice of placing welded wire fabric on the ground and hooking it into place in the freshly placed concrete shall not be used.

3.2 CONCRETE COVER

Cover shall be as shown on the drawings. If cover is noted in one place on a drawing, assume the same cover is to be used in similar cases.

3.3 SPLICING

A. All lap splices of bar reinforcement shall be as indicated on the drawings. Unless otherwise indicated, dowels shall match the size and spacing of the spliced bar.

B. Lap welded wire fabric at least one space. Adjoining sheets shall be securely tied together with No. 14 tie wire, one tie for each two running feet. Wires shall be staggered and tied in such a manner that they cannot slip.

C. Splices in column spiral reinforcement, when necessary, shall be made by a lap of 1-1/2 turns.

D. Reinforcing shall not be straightened or rebent in a manner which will injure the material. Bars shall be bent or straight as indicated. Do not use bends different from the bends indicated. Bars shall be bent cold, unless otherwise permitted by the District. No bars partially embedded in concrete shall be field-bent except as indicated or specifically permitted by the District.

E. Couplers which are located at a joint face shall be a type which can be set either flush or recessed from the face as indicated. The couplers shall be sealed during concrete placement to completely eliminate concrete or cement paste from entering. Couplers intended for future connections shall be recessed a minimum of 1/2-inch from the concrete surface. After the concrete is placed, the coupler shall be plugged with plastic plugs which have an O-ring seal and the recess filled with sealant to prevent any contact with water or other corrosive materials. Threaded couplers shall be plugged.

3.4 CLEANING AND PROTECTION

A. Unless indicated otherwise, mechanical coupler spacing and capacity shall match the spacing and capacity of the reinforcing indicated for the adjacent section.

B. Reinforcement shall be free of all materials that will reduce bond.

C. Reinforcement steel shall at all times be protected from conditions conducive to corrosion until concrete is placed around it.

D. The surfaces of reinforcement steel and other metalwork to be in contact with concrete shall be thoroughly cleaned of all dirt, grease, loose scale and rust, grout, mortar, and other foreign substances immediately before the concrete is placed. Where there is delay in depositing concrete,

reinforcement shall be re-inspected and, if necessary, re-cleaned or sandblasted.

E. Properly cap all vertical reinforcement steel if area is subject to having workers above the reinforcement area.

3.5 INSTALLATION OF DRILLED REINFORCING STEEL DOWELS

For drilling and epoxy grouting information see Section 05 50 15, CIVIL WORK FABRICATIONS.

-- End of Section --

SECTION 03 31 01.00 10

CAST-IN-PLACE STRUCTURAL CONCRETE FOR CIVIL WORKS

PART 1 GENERAL

1.1 REFERENCES

The publications listed below form a part of this specification to the extent referenced. The publications are referred to within the text by the basic designation only.

AMERICAN CONCRETE INSTITUTE INTERNATIONAL (ACI)

ACI 117	(2010; Errata 2011) Specifications for Tolerances for Concrete Construction and Materials and Commentary
ACI 211.1	(1991; R 2009) Standard Practice for Selecting Proportions for Normal, Heavyweight and Mass Concrete
ACI 214R	(2011) Evaluation of Strength Test Results of Concrete
ACI 301	(2016) Specifications for Structural Concrete
ACI 301M	(2016) Metric Specifications for Structural Concrete
ACI 305R	(2010) Guide to Hot Weather Concreting
ACI 306R	(2016) Guide to Cold Weather Concreting
ACI SP-15	(2011) Field Reference Manual: Standard Specifications for Structural Concrete ACI 301-05 with Selected ACI References

ASTM INTERNATIONAL (ASTM)

ASTM C1017/C1017M	(2013; E 2015) Standard Specification for Chemical Admixtures for Use in Producing Flowing Concrete
ASTM C1064/C1064M	(2011) Standard Test Method for Temperature of Freshly Mixed Hydraulic-Cement Concrete
ASTM C1077	(2016) Standard Practice for Laboratories Testing Concrete and Concrete Aggregates for Use in Construction and Criteria for Laboratory Evaluation
ASTM C1107/C1107M	(2014a) Standard Specification for Packaged Dry, Hydraulic-Cement Grout (Nonshrink)

ASTM C1157/C1157M	(2011) Standard Specification for Hydraulic Cement
ASTM C117	(2013) Standard Test Method for Materials Finer than 75-um (No. 200) Sieve in Mineral Aggregates by Washing
ASTM C123/C123M	(2014) Standard Test Method for Lightweight Particles in Aggregate
ASTM C1260	(2014) Standard Test Method for Potential Alkali Reactivity of Aggregates (Mortar-Bar Method)
ASTM C127	(2015) Standard Test Method for Density, Relative Density (Specific Gravity), and Absorption of Coarse Aggregate
ASTM C128	(2015) Standard Test Method for Density, Relative Density (Specific Gravity), and Absorption of Fine Aggregate
ASTM C131/C131M	(2014) Standard Test Method for Resistance to Degradation of Small-Size Coarse Aggregate by Abrasion and Impact in the Los Angeles Machine
ASTM C136/C136M	(2014) Standard Test Method for Sieve Analysis of Fine and Coarse Aggregates
ASTM C142/C142M	(2017) Standard Test Method for Clay Lumps and Friable Particles in Aggregates
ASTM C143/C143M	(2015) Standard Test Method for Slump of Hydraulic-Cement Concrete
ASTM C150/C150M	(2017) Standard Specification for Portland Cement
ASTM C192/C192M	(2016a) Standard Practice for Making and Curing Concrete Test Specimens in the Laboratory
ASTM C157	Standard Test Method for Length Change of Hardened Hydraulic-Cement Mortar and Concrete
ASTM C42/C42M	(2013) Standard Test Method for Obtaining and Testing Drilled Cores and Sawed Beams of Concrete
ASTM C1567	(2013) Standard Test Method for Potential Alkali-Silica Reactivity of Combinations of Cementitious Materials and Aggregate (Accelerated Mortar-Bar Method)

ASTM C1602/C1602M	(2012) Standard Specification for Mixing Water Used in Production of Hydraulic Cement Concrete
ASTM C172/C172M	(2014a) Standard Practice for Sampling Freshly Mixed Concrete
ASTM C231/C231M	(2017) Standard Test Method for Air Content of Freshly Mixed Concrete by the Pressure Method
ASTM C260/C260M	(2010a; R 2016) Standard Specification for Air-Entraining Admixtures for Concrete
ASTM C31/C31M	(2015a; E 2016) Standard Practice for Making and Curing Concrete Test Specimens in the Field
ASTM C33/C33M	(2016) Standard Specification for Concrete Aggregates
ASTM C39/C39M	(2017) Standard Test Method for Compressive Strength of Cylindrical Concrete Specimens
ASTM C40/C40M	(2011) Standard Test Method for Organic Impurities in Fine Aggregates for Concrete
ASTM C494/C494M	(2016) Standard Specification for Chemical Admixtures for Concrete
ASTM C535	(2016) Standard Test Method for Resistance to Degradation of Large-Size Coarse Aggregate by Abrasion and Impact in the Los Angeles Machine
ASTM C566	(2013) Standard Test Method for Total Evaporable Moisture Content of Aggregate by Drying
ASTM C595/C595M	(2017) Standard Specification for Blended Hydraulic Cements
ASTM C618	(2012a) Standard Specification for Coal Fly Ash and Raw or Calcined Natural Pozzolan for Use in Concrete
ASTM C666/C666M	(2015) Resistance of Concrete to Rapid Freezing and Thawing
ASTM C87/C87M	(2010) Effect of Organic Impurities in Fine Aggregate on Strength of Mortar
ASTM C94/C94M	(2017) Standard Specification for Ready-Mixed Concrete
ASTM C989/C989M	(2017) Standard Specification for Slag Cement for Use in Concrete and Mortars

ASTM D75/D75M	(2014) Standard Practice for Sampling Aggregates

CONCRETE REINFORCING STEEL INSTITUTE (CRSI)

CRSI 10MSP	(2009; 28th Ed) Manual of Standard Practice

NATIONAL INSTITUTE OF STANDARDS AND TECHNOLOGY (NIST)

NIST HB 44	(2013) Specifications, Tolerances, and Other Technical Requirements for Weighing and Measuring Devices

NATIONAL READY MIXED CONCRETE ASSOCIATION (NRMCA)

NRMCA CPMB 100	(2000; R 2006) Concrete Plant Standards
CRD-C 514-92	(1992) Concrete Plant Standards of the Concrete Plant Manufacturers Bureau

U.S. ARMY CORPS OF ENGINEERS (USACE)

COE CRD-C 104	(1980) Method of Calculation of the Fineness Modulus of Aggregate
COE CRD-C 114	(1997) Test Method for Soundness of Aggregates by Freezing and Thawing of Concrete Specimens
COE CRD-C 130	(2001) Standard Recommended Practice for Estimating Scratch Hardness of Coarse Aggregate Particles
COE CRD-C 143	(1962) Specifications for Meters for Automatic Indication of Moisture in Fine Aggregate
COE CRD-C 521	(1981) Standard Test Method for Frequency and Amplitude of Vibrators for Concrete
COE CRD-C 94	(1995) Corps of Engineers Specification for Surface Retarders

1.2 DESIGN REQUIREMENTS

Design in accordance with ACI 301M, Section 4. Submit concrete mix designs with the following properties.

General: Concrete shall be composed of cement, admixtures, aggregates, and water of the qualities indicated. The exact proportions in which these materials are to be used for different parts of the Work will be determined during the trial batch process. In general, the mix shall be designed to produce a concrete capable of being deposited so as to obtain maximum density and minimum shrinkage, and, where deposited in forms, to have good consolidation properties and maximum smoothness of surface. The aggregate gradations shall be formulated to provide fresh concrete that will not

promote rock pockets around reinforcing steel or embedded items. The proportions shall be changed whenever necessary or desirable to meet the required results. All changes shall be subject to review by the District.

1.2.1 Air Content

Air content shall be between 4 and 7 percent as delivered to the forms and as determined by ASTM C231/C231M, except that when the nominal maximum-size coarse aggregate is 3/4 inch, between 4.5 and 7.5 percent.

1.2.2 Slump

The slump shall be within the range of 1 to 4 inches as determined in accordance with ASTM C143/C143M at the hopper. Where placement by pump is approved, the slump must not exceed 7 inches plus/minus 2 inches at the hopper. Concrete to be placed in walls may contain a chemical admixture for use in producing flowing concrete in accordance with ASTM C1017/C1017M, and the slump of the concrete after dosing must not exceed 8 inches.

1.2.3 Concrete Strength

Provide specified compressive strength f'c as follows:

Type of Work	**Min 28-Day Compressive Strength (psi)**	**Maximum Size Aggregate (in)**	*** Cement Content per cubic yd (lbs)**	*** Maximum W/C Ratio (by weight)**
Structural Contrete				
Roof, floor slabs, columns, walls, and all other concrete items not indicated elsewhere.	4,500	1	564 to 600	0.45
12-inch and thicker walls, slabs on grade, and footings (optional)	4,500	1-1.2	564 to 600	0.45
Tremie Concrete	4,000	3/4	658 minimum	0.45
Pea Gravel Concrete				
Thin sections and areas with congested reinforcing, at the Contractor's option and with the written approval of the District for the specific location.	4,500	3/8	752 to 788	0.40
Sitework Concrete	3,000	1	470 (min)	0.50
Lean concrete	Tyh	1	376 (min)	0.60

A. Duct bank concrete shall contain an integral red-oxide coloring pigment. Concrete shall be dyed red throughout. Surface treatment to color duct banks will not be acceptable.

B. Water/Cement Ratio and Compressive Strength: Water/cement ratio is given for aggregates in saturated-surface dry condition, and total moisture

of all aggregates, calculated by ASTM C566, less the absorption of the aggregate as calculated by ASTM C127 and C128, shall represent total free moisture in the aggregate to determine the water/cement ratio. Total free moisture of aggregates shall be added to batch water to estimate water content of concrete. Concrete shall have the following minimum properties: The cement content and water cement ratio are based on total cementitious material including silica fume, slag or flyash.

C. NOTE: The Contractor is cautioned that the limiting parameters above are not a mix design. Admixtures may be required to achieve workability required by the CONTRACTOR'S construction methods and aggregates. The Contractor is responsible for providing concrete with the required workability and strength.

D. Adjustments to Mix Design: The Contractor may elect to decrease the water/cement ratio to achieve the strength and shrinkage requirements and/or add water reducers, as required to achieve workability. The mixes shall be changed whenever such change is necessary or desirable to secure the required strength, density, workability, and surface finish, and the Contractor shall be entitled to no additional compensation because of such changes. Any changes to the accepted concrete mix design shall be submitted to the District for review and shall be tested again in accordance with these Specifications.

1.2.4 Maximum Water-Cementitious Material (W/C) Ratio

Maximum W/C allowed as follows:

WATER-CEMENT RATIO, BY MASS	STRUCTURE OF PORTION OF STRUCTURE
0.40-.42	Precast and Structural Concrete
0.62	Used for fill for unauthorized excavation, for thrust blocks and ground anchors for piping, for beding of pipe, and where indicated on the Drawings. Electrical conduit encasements

These W/C's may cause higher strengths than that required by paragraph CONCRETE STRENGTH.

1.2.5 Construction Tolerances

Except as specified otherwise, a plus tolerance increases and a minus tolerance decreases the dimension to which it applies. A tolerance without sign means plus or minus. Where only one sign is specified, there is no limit in the other direction. Tolerances are not cumulative. The most restrictive tolerance will control. Tolerances cannot extend the structure beyond legal boundaries.

a. Make level and grade tolerance measurements of slabs as soon as possible after finishing. When forms or shoring are used, make the measurements prior to removal.

b. Construction tolerances must meet the requirements of ACI 117 and any of the following requirements that are applicable.

1.2.5.1 Formed Concrete Surfaces

For High Velocity flow, Class A-HV-Abrupt variation including the discharge ends of S471, S472, S473, S474 and the entirety of S475, ~~Class A-HV-Abrupt variation~~, a positive offset between concrete surfaces is a raise of elevation in the direction of water flow and a negative offset is a drop of elevation in the direction of the water flow.

Direction of water flow	+ 0 inches
	- 1/8 inch
Perpendicular to the direction of water flow	1/8 inch

1.2.5.2 Tunnel Linings, Conduits, Filling & Emptying Culverts

Water Conveying:

Lateral alignment	
Centerline alignment	1/2 inch
Inside dimensions	0.005 times inside dimension
Level alignment	
Profile grade	1/2 inch
Cross-Sectional dimension	
Tunnel and culvert lining	- 0 inch

1.2.5.3 Appearance

Clean permanently exposed surfaces, if stained or otherwise discolored, by a method that does not harm the concrete and that is approved by the District.

1.2.6 Drying Shrinkage

Prepare 5 drying shrinkage specimens in accordance with ASTM C157, except as modified in this Section.

Remove drying shrinkage specimens from molds at age of 23 hours within 1 hour after trial batching, then immediately place them in water at 73 degrees Fahrenheit within 3 degrees for at least 30 minutes and then measure specimens within 30 minutes thereafter to determine original length.

Then submerge specimens in saturated limewater at 73 degrees Fahrenheit within 3 degrees for moist curing.

Make measurement to determine expansion expressed as percentage of original length at age 7 days.

Use length at age 7 days as base length for drying shrinkage calculations.

Immediately store specimens in humidity controlled room maintained at 73 degrees Fahrenheit within 3 degrees and 50 percent within 4 percent relative humidity for remainder of test.

Make and report measurements to determine shrinkage expressed as percentage of base length separately for 7, 14, 21, and 28 days of drying after 7 days of moist curing.

1.2.7 Drying shrinkage deformation

Measure drying shrinkage deformation of each specimen as difference between base length and length after drying at each test age.

Measure average drying shrinkage deformation of specimens to nearest 0.0001 inch at each test age.

If drying shrinkage of any specimen departs from average of test age by more than 0.0004 inch, disregard results obtained from that specimen and test another specimen.

Shrinkage of trial batch concrete at 28 days drying age shall not exceed 0.045 percent maximum. Contractor shall submit shrinkage results.

1.2.8 Mass concrete

Concrete greater than 3 feet in thickness.

Mass Concrete Design requirements:

Mass Concrete Thermal Control Plan:

General: Submit Mass Concrete Thermal Control Plan signed by licensed engineer, registered in the state where Project is located and qualified in the preparation of thermal control plans. Include following as minimum:

Based on range of average daily ambient air temperatures and initial concrete temperature at point of placement, calculate following for each mass concrete placement.

Maximum concrete temperature.

Time from concrete placement until maximum concrete temperature occurs.

Maximum concrete differential temperature.

Time from concrete placement until maximum concrete differential temperature occurs.

Length of thermal control period.

Concrete mix design.

Duration and method of curing.

Procedures to control concrete temperature at time of placement.

Methods of controlling maximum concrete differential temperature.

Temperature sensor types and locations.

Temperature monitoring and recording system.

Field measures to ensure conformance with maximum concrete temperature and maximum concrete temperature differential requirements. Submit the following:

Tabular data of hourly concrete temperature for each temperature sensor

Tabular data for hourly concrete temperature differential for each temperature sensor

Plot of temperature and temperature differential for each temperature sensor

Heat removal plan

Corrective measure to take if it appears specified concrete maximum temperature and maximum concrete differential temperature will be exceeded.

Have temperature control measures in place during the placement of concrete to limit maximum initial concrete temperature rise to 20 degrees Fahrenheit.

Difference in temperature between concrete interior and surface temperatures shall not exceed 35 degrees Fahrenheit.

Allow interior of concrete to cool down and stabilize.

Maximum allowable concrete temperature: 157 degrees Fahrenheit.

Do not place mass concrete until DISTRICT has accepted in writing, Mass Concrete Thermal Control Plan.

1.2.8.1 Pre-cooling of concrete

If necessary to reduce concrete temperatures, cool concrete mix prior to placement, by following means:

Cool batch water.

Ice may be substituted for portion of batch water.

Continuously spray coarse aggregate with water to cool aggregate. Adjust batch water content to account for added water content in aggregate due to use of cooling water.

Nitrogen injection.

Alternative means proposed by Contractor that are acceptable to District.

1.2.8.2 Post-cooling of concrete

At Contractor's option, use embedded thin walled piping for circulating water to control temperature gain in previously cast concrete.

Clearly indicate in Mass Concrete Thermal Control Plan if cooling piping will be embedded in concrete.

Do not install embedded piping within top 20 inches of slab or wall.

Operate cooling pipe system for duration of cooling period. Cooling period shall be minimum of 7 days or until internal maximum is met, .

After use of cooling pipes to cool concrete is complete, fill pipes with grout.

1.2.8.3 Temperature monitoring program

Temperature monitoring and recording system:

Consist of temperature sensors connected to data acquisition system capable of printing, storing, and downloading data to computer.

Locate temperature sensors so that maximum temperature difference within mass concrete element can be monitored.

As minimum, monitor concrete temperatures at calculated hottest location, on at least 2 outer faces, two corners, and top surface. Install primary and secondary (backup) sensors.

Print and submit temperature monitoring data to District daily.

1.2.8.4 Temperature control period

Maintain temperature control measures until following requirements are met:

Maximum internal concrete temperature has been reached and temperature is falling.

Difference between interior concrete temperature and the average daily air temperature is less than allowable temperature difference for 3 consecutive days.

~~5~~ 7 days have elapsed since concrete was placed.

There are no adjacent mass concrete elements to be cast.

Monitor concrete temperatures during Temperature Control Period.

Do not place adjacent concrete placements during Temperature Control Period.

Concrete consolidation:

Use methods that prevent damage to temperature monitoring and recording system.

Temperature sensor and wiring:

Protect wiring connected to temperature sensors cast into concrete to prevent movement.

Keep wire runs as short as possible.

Do not allow ends of temperature sensors to come into contact with supports concrete forms, or reinforcing bars.

Equipment failure:

When any equipment used in temperature control, monitoring, and recording system fails during mass concrete construction operation, take immediate measures to correct situation in accordance with Mass Concrete Thermal Control Plan.

Failure to conform to temperature requirements will be cause for rejection of concrete.

1.2.9 Maximum Cement Content

~~No more than 752 lb. of cement or its equivalent shall be used in a cubic yard of concrete.~~Cement content shall not exceed the limits provided in the table in Section 1.2.3 of this section.

Fly Ash may be substituted for cement at a 1 to 1 ratio up to the limits given.

Granulated blast furnace slag may be substituted for cement at a 1 to 1 ratio up to the limits given.

1.3 SUBMITTALS

Submit the following in accordance with Section 01 33 00 SUBMITTAL PROCEDURES:

SD-02 Shop Drawings

For Mass Concrete; Layout of cooling pipe system, if used, showing pipe sizes and material type, connections, location, spacing, method of support, and system for monitoring temperature of water in cooling pipes.

Locations of Construction Joints

Sequencing Plan for Concrete Pours

SD-03 Product Data

Concrete Plant Standards

Concrete Mix Designs

Batch Plant

Concrete Mixers

Conveying Equipment

Placing Equipment

Construction Joint Treatment

Cold-Weather Requirements

Hot-Weather Requirements

Cementitious Materials, Admixtures, and Curing Compound

Nonshrink Grout

Mass Concrete Thermal Control Plan

Strain Gauges

Batch Plant Data

SD-06 Test Reports

Aggregates

Cement Mill Test Reports (with alkali content)

Tests and Inspections

Quality of Aggregates

Mixer Uniformity

Trial Batch tests

Water

Shrinkage Results

Temperature monitoring data

Tabular data of hourly concrete temperature for each temperature sensor

Tabular data for hourly concrete temperature differential for each temperature sensor

Plot of temperature and temperature differential for each temperature sensor

Heat removal plan

Chemical Analysis Of Water Used For Curing

SD-07 Certificates

Concrete Field Testing Technicians

Concrete Construction Inspector (CCI)

Cementitious Materials

Blended Hydraulic Cement

Fly Ash Certificate of Compliance

SD-08 Manufacturer's Instructions

Curing Compound

1.4 QUALITY REQUIREMENTS

The Contractor, at their expense, will sample and test aggregates and concrete to determine compliance with the specifications. Provide facilities and labor as may be necessary for procurement of representative test samples. Samples of aggregates will be obtained at the point of batching in accordance with ASTM D75/D75M. Concrete will be sampled in accordance with ASTM C172/C172M. Do not use a material until the District gives notice that test results are satisfactory. The Contractor, at their expense, will sample and test chemical admixtures, curing compounds, and cementitious materials. The individuals who sample and test concrete or the constituents of concrete as required in this specification must have demonstrated a knowledge and ability to perform the necessary test procedures equivalent to the ACI minimum guidelines for certification of Concrete Field Testing Technicians, Grade I. The individuals who perform the inspection of concrete construction must have demonstrated a knowledge and ability equivalent to the ACI minimum guidelines for certification of Concrete Construction Inspector (CCI). Submit statements that the concrete testing technicians and the concrete inspectors meet the specified requirements. Maintain a copy of ACI SP-15 and CRSI 10MSP at project site.

1.4.1 Cementitious Materials, Admixtures, and Curing Compound

At least 60 days in advance of concrete placement, notify the District of the sources for cementitious materials, admixtures, and curing compound, along with sampling location, brand name, type, and quantity to be used in the manufacture and/or curing of the concrete. Cementitious Materials, including Cement and Pozzolan, and Ground Granulated Blast-Furnace Slag will be accepted on the basis of the manufacturer's certification of compliance and mill test results. Fly ash Certificate of Compliance: Identify source of fly ash and certify compliance in accordance with ASTM C618. Include alkali content representative of each shipment of cement for verification of compliance with specified requirements. Do not use cementitious materials until receiving District notice of acceptance. Provide cementitious materials Certificate of Compliance. Promptly remove material not meeting specifications from the site of work. At the District's request, submit samples of materials for testing and approval at the Contractor's expense for the District's approval. Submit manufacturer's instructions for placement of curing compound.

1.5 TESTING REQUIREMENTS

1.5.1 Proportioning Studies-Normal Weight Concrete

Trial design batches, mixture proportions studies, and testing requirements for various classes and types of concrete specified are the responsibility of the Contractor. Except as specified for flexural strength concrete, mixture proportions shall be based on compressive strength as determined by

test specimens fabricated in accordance with ASTM C192/C192M and tested in accordance with ASTM C39/C39M.

a. Samples of all materials used in mixture proportioning studies shall be representative of those proposed for use in the project and be accompanied by the manufacturer's or producer's test reports indicating compliance with these specifications.

b. Make trial mixtures having proportions, consistencies, and air content suitable for the work based on methodology described in ACI 211.1, using at least three different water-cement ratios for each type of mixture, which will produce a range of strength encompassing those required for each class and type of concrete required on the project.

c. The maximum water-cement ratios required in subparagraph Water-Cement Ratio below will be the equivalent water-cement ratio as determined by conversion from the weight ratio of water to cement plus pozzolan, silica fume, and ground granulated blast furnace slag (GGBF slag) by the weight equivalency method as described in ACI 211.1. In the case where silica fume or GGBF slag is used, the weight of the silica fume and GGBF slag shall be included in the equations in ACI 211.1 for the term P, which is used to denote the weight of pozzolan. If pozzolan is used in the concrete mixture, the minimum pozzolan content shall be 15 percent by weight of the total cementitious material, and the maximum shall be 35 percent.

d. Design laboratory trial mixtures for maximum permitted slump and air content. Make separate sets of trial mixture studies for each combination of cementitious materials and each combination of admixtures proposed for use. Separate trial mixture studies shall also be made for concrete for any conveying or placing method proposed which requires special properties and for concrete to be placed in unusually difficult placing locations.

e. Report the temperature of concrete in each trial batch tests. For each water-cement ratio, at least three test cylinders for each test age shall be made, cured in accordance with ASTM C192/C192M and tested at 7 and 28 days in accordance with ASTM C39/C39M. From these test results, plot a curve showing the relationship between water-cement ratio and strength for each set of trial mix studies. In addition, a curve shall be plotted showing the relationship between 7 day and 28 day strengths. Design each mixture to promote easy and suitable concrete placement, consolidation, and finishing, and to prevent segregation and excessive bleeding.

f. Submit the results of trial mixture design studies along with a statement giving the maximum nominal coarse aggregate size and the proportions of ingredients that will be used in the manufacture of each strength or class of concrete, at least 30 days prior to commencing concrete placing operations. Aggregate weights shall be based on the saturated surface dry condition. Accompany the statement with test results from an approved independent commercial testing laboratory, showing that mixture design studies have been made with materials proposed for the project and that the proportions selected will produce concrete of the qualities indicated. No substitutions shall be made in the materials used in the mixture design studies without additional tests to show that the quality of the concrete is satisfactory.

1.5.2 Average Compressive Strength

The mixture proportions selected during mixture design studies shall produce a required average compressive strength (f'cr) exceeding the specified compressive strength (f'c) by the amount indicated below. This required average compressive strength, f'cr, will not be a required acceptance criteria during concrete production. However, whenever the daily average compressive strength at 28 days drops below f'cr during concrete production, or daily average 7-day strength drops below a strength correlated with the 28-day f'cr, adjust the mixture, as approved, to bring the daily average back up to f'cr. During production, the required f'cr shall be adjusted, as appropriate, based on the standard deviation being attained on the job.

1.5.3 Computations from Test Records

Where a concrete production facility has test records, establish a standard deviation in accordance with the applicable provisions of ACI 214R. Test records from which a standard deviation is calculated shall represent materials, quality control procedures, and conditions similar to those expected; shall represent concrete produced to meet a specified strength or strengths (f'c) within 1,000 psi of that specified for proposed work; and shall consist of at least 30 consecutive tests. A strength test shall be the average of the strengths of two cylinders made from the same sample of concrete and tested at 28 days. Required average compressive strength f'cr used as the basis for selection of concrete proportions shall be the larger of the equations that follow using the standard deviation as determined above:

f'cr = f'c + 1.34S where units are in psi

f'cr = f'c + 2.33S - 500 where units are in psi

Where S = standard deviation

Where a concrete production facility does not have test records meeting the requirements above but does have a record based on 15 to 29 consecutive tests, a standard deviation shall be established as the product of the calculated standard deviation and a modification factor from the following table:

NUMBER OF TESTS	MODIFICATION FACTOR FOR STANDARD DEVIATION
15	1.16
20	1.08
25	1.03
30 or more	1.00

1.5.4 Computations without Previous Test Records

When a concrete production facility does not have sufficient field strength test records for calculation of the standard deviation, the required average strength f'cr shall be determined as follows:

a. If the specified compressive strength f'c is less than 3,000 psi, f'cr = f'c + 1000 psi

b. If the specified compressive strength f'c is 3,000 to 5,000 psi, f'cr = f'c + 1,200 psi

c. If the specified compressive strength f'c is over 5,000 psi, f'cr = f'c + 1,400 psi

1.6 STRENGTH REQUIREMENTS

1.6.1 Strength Requirements

Specified compressive strength (f'c) shall be as described in Table 1.2.3.

1.6.1.1 Evaluation of Concrete Compressive Strength

Fabricate compressive strength specimens (cylinders), laboratory cure them in accordance with ASTM C31/C31M and test them in accordance with ASTM C39/C39M. The strength of the concrete will be considered satisfactory so long as the average of all sets of three consecutive test results equals or exceeds the specified compressive strength f'c and no individual test result falls below the specified strength f'c by more than 500 psi. A "test" is defined as the average of two companion cylinders~~, or if only one cylinder is tested, the results of the single cylinder test~~. Additional analysis or testing, including taking cores and/or load tests may be required at the Contractor's expense when the strength of the concrete in the structure is considered potentially deficient.

1.6.1.2 Investigation of Low-Strength Compressive Test Results

When any strength test of standard-cured test cylinders falls below the specified strength requirement by more than 500 psi or if tests of field-cured cylinders indicate deficiencies in protection and curing, take steps to assure that the load-carrying capacity of the structure is not jeopardized. When the strength of concrete in place is considered potentially deficient, cores shall be obtained and tested in accordance with ASTM C42/C42M. At least three representative cores shall be taken from each member or area of concrete in place that is considered potentially deficient. The location of cores will be determined by the District to least impair the strength of the structure. Concrete in the area represented by the core testing will be considered adequate if the average strength of the cores is equal to at least 85 percent of the specified strength requirement and if no single core is less than 75 percent of the specified strength requirement. Non-destructive tests (tests other than test cylinders or cores) shall not be used as a basis for acceptance or rejection. Perform the coring and repair the holes; cores will be tested by the Contractor at their expense and approved by the District.

1.6.1.3 Load Tests

If the core tests are inconclusive or impractical to obtain or if structural analysis does not confirm the safety of the structure, load tests may be directed by the District in accordance with the requirements of ACI 301 at the Contractor's expense. Concrete work evaluated by structural analysis or by results of a load test as being understrength shall be corrected in a manner satisfactory to the District. All investigations, testing, load

tests, and correction of deficiencies shall be performed by and at the expense of the Contractor and approved by the District, except that if all concrete is found to be in compliance with the drawings and specifications, the cost of investigations, testing, and load tests will be at the expense of the District.

1.7 DELIVERY, STORAGE, AND HANDLING

Retest chemical admixtures that have been in storage at the project site for longer than 6 months or that have been subjected to freezing and reject if test results are not satisfactory. Chemical admixtures will be accepted based on compliance with the requirements of paragraph CHEMICAL ADMIXTURES.

1.8 WARRANTY

The warranty shall meet the requirements specified in SECTION 01 61 03 EQUIPMENT AND MATERIALS.

PART 2 PRODUCTS

2.1 MATERIALS

Submit mill test reports attesting that materials meet the requirements of the specification under which they are furnished. Certification and mill test reports must be from samples taken from the particular lot furnished. Certify the following for compliance with all specification requirements: Impervious-Sheet Curing Materials, Air-Entraining Admixture, Other Chemical Admixtures, Membrane-Forming Curing Compound. Submit descriptive literature of the Nonshrink Grout proposed for use together with a certificate from the manufacturer stating that it is suitable for the application or exposure for which it is being considered. For crystalline waterproofing admixture see Section 03 31 27.

2.1.1 Cementitious Materials

Cementitious materials are portland cement, portland-pozzolan cement, portland blast-furnace slag cement, portland cement in combination with pozzolan or GGBF slag conforming to appropriate specifications listed below. Restrict the use of cementitious materials in architectural concrete to one color, one source, and one type.

2.1.1.1 Portland Cement

ASTM C150/C150M, Type I or II, except that the maximum amount of C3A in Type I cement is 15 percent, except it is limited to 8 percent for mass concrete, including the heat of hydration at 7 days, and low alkali when used with aggregates listed at the end of this section which require it. Dual grade cements, such as II-V are acceptable.

2.1.1.2 High-Early-Strength Portland Cement

ASTM C150/C150M, Type III, low alkali when used with approved aggregates.

2.1.1.3 Fly Ash

Fly Ash shall conform to ASTM C618, Class F, except that the maximum allowable loss on ignition must not exceed 4 percent. Class F fly ash for

use in mitigating Alkali-Silica Reactivity must have a Calcium Oxide (CaO) content of less than 8 percent and a total equivalent alkali content less than 1.5 percent. When used, add a minimum of 15 percent up to a maximum of 25 percent of the Cementitious materials.

2.1.1.4 Raw or Calcined Natural Pozzolan

Natural pozzolan must be raw or calcined and conform to ASTM C618, Class N, including the optional requirements for uniformity and effectiveness in controlling Alkali-Silica reaction and must have an ignition loss not exceeding 3 percent. Class N pozzolan for use in mitigating Alkali-Silica Reactivity must have a Calcium Oxide (CaO) content of less than 13 percent and total equivalent alkali content less than 3 percent.

2.1.1.5 Ultra-Fine Fly Ash and Ultra-Fine Pozzolan

Ultra-Fine Fly Ash (UFFA) and Ultra-Fine Pozzolan (UFP) must conform to ASTM C618, Class F or N, and the following additional requirements:

a. The strength activity index at 28 days of age is at least 95 percent of the control specimens.

b. The average particle size does not exceed 6 microns.

c. The sum of SiO_2 + Al_2O_3 + Fe_2O_3 is greater than 77 percent.

2.1.1.6 Ground Granulated Blast-Furnace Slag

Conform to ASTM C989/C989M, Grade 120. When used, use up to 25 percent as a percentage of Cementitious materials.

2.1.1.7 Blended Hydraulic Cement

Conform to ASTM C595/C595M and ASTM C1157/C1157M, Type IP or IS, including the optional requirement for mortar expansion and sulfate soundness and consist of a mixture of ASTM C150/C150M Type I, or Type II cement and a complementary cementing material. Provide slag added to the Type IS blend conforming to ASTM C989/C989M ground granulated blast-furnace slag. Use pozzolan added to the Type IP blend conforming ASTM C618 Class F and interground with the cement clinker. Provide the manufacturer's written statement that the amount of pozzolan in the finished cement will not vary more than plus or minus 5 mass percent of the finished cement from lot-to-lot or within a lot. The percentage and type of mineral admixture used in the blend cannot change from that submitted for the aggregate evaluation and mixture proportioning.

2.1.2 Aggregates

ASTM C33/C33M, except as modified herein. Furnish aggregates for exposed concrete surfaces from one source. Provide aggregates that do not contain any substance which may be deleteriously reactive with the alkalis in the cement. Submit test report showing compliance with ASTM C33/C33M. Do not use aggregates containing recycled materials such as crushed and screened concrete, brick, or other construction materials. Aggregate size shall be limited to a maximum size of one inch.

Fine Aggregate Composition:

In mix designs for structural concrete, the percentage of fine aggregate in total aggregate by weight shall be as indicated in the following table.

Fine Aggregate	
Fineness Modulus	**Maximum Percent**
2.7 or less	41
2.7 to 2.8	42
2.8 to 2.9	43
2.9 to 3.1	44

For other concrete, the maximum percentage of fine aggregate of total aggregate, by weight, shall not exceed 50.

Fine aggregate shall be 50 percent, plus or minus five (5) percent by volume of total aggregates for Tremie Concrete.

2.1.2.1 Aggregate Expansion

Provide fine and coarse aggregates with expansions less than 0.08 percent at 16 days after casting when testing in accordance with ASTM C1260. Should the test data indicate an expansion of 0.08 percent or greater, reject the aggregate(s) or perform additional testing using ASTM C1567 and using the proposed mix design. In this case, include the mix design low alkali portland cement and one of the following supplementary cementitious materials:

a. GGBF slag at a minimum of 25 percent of total cementitious materials

b. Fly ash or natural pozzolan at a minimum of total cementitious materials of

(1) 30 percent if (SiO_2 plus Al_2O_3 plus Fe_2O_3) is 65 percent or more,

(2) 25 percent if (SiO_2 plus Al_2O_3 plus Fe_2O_3) is 70 percent or more,

(3) 20 percent if (SiO_2 plus Al_2O_3 plus Fe_2O_3) is 80 percent or more,

(4) 15 percent if (SiO_2 plus Al_2O_3 plus Fe_2O_3) is 90 percent or more.

If a combination of these materials is chosen, the minimum amount must be a linear combination of the minimum amounts above. Include these materials in sufficient proportion to show less than 0.08 percent expansion at 16 days after casting when tested in accordance with ASTM C1567.

2.1.3 Chemical Admixtures

Provide chemical admixtures, when required or permitted which conform to the appropriate specification listed.

2.1.3.1 Air-Entraining Admixture

Conform to ASTM C260/C260M and consistently cause the concrete to have an air content in the specified ranges under field conditions.

2.1.3.2 Accelerating Admixture

Meet the requirements of ASTM C494/C494M, Type C or E, except that calcium chloride or admixtures containing calcium chloride is not permitted. Do not use in mass concrete.

2.1.3.3 Water-Reducing or Retarding Admixture

2.1.3.3.1 Water-Reducing or Retarding Admixtures

ASTM C494/C494M, Type A or D, except that the 6-month and 1-year compressive strength tests are waived.

2.1.3.3.2 High-Range Water Reducing Admixture

High-Range Water Reducing Admixture shall conform to ASTM C494/C494M, Type F or G except that the 6-month and 1-year strength requirements are waived. The admixture may be used only when approved by the District, such approval being contingent upon particular mixture control as described in the Contractor's Quality Control Plan. High range water reducer shall not be used in Tremie Concrete except in conjunction with an anti-washout admixture to provide the degree of workability required for proper placement and consolidation.

2.1.3.4 Other Chemical Admixtures

2.1.3.4.1 Provide other chemical admixtures for use in producing flowing concrete in compliance with ASTM C1017/C1017M, Type 1 or 2. Only use these admixture for concrete listed in paragraph SLUMP.
2.1.3.4.2 Provide crystalline waterproofing admixture as required by the Contract Documents in accordance with Section 03 31 27.

2.1.4 Water

Provide water for mixing with the requirements of ASTM C1602/C1602M; free of injurious amounts of oil, acid, salt, or alkali. Submit test report showing water complies with ASTM C1602/C1602M. Water for curing shall not be brackish nor contain any aggressive acids, or high amounts of organic materials.

2.1.5 Nonshrink Grout

Conform to ASTM C1107/C1107M and a commercial formulation suitable for the application proposed.

2.1.6 Dry-pack mortar

Proportions by weight: 1 part portland cement to 2 parts concrete sand.

Portland cement: See paragraph entitled, "Portland Cement," of this section.

Concrete sand: See paragraph entitled, "Aggregates," of this section.

2.1.7 Concrete Sealer

Manufacturers: One of the following or equal:

Euclid Chemical Company: Diamond Hard.

L&M Construction Chemicals: SealHard.

2.1.8 Abrasive Aggregates

Fifty-five percent, minimum, aluminum oxide abrasive ceramically bonded together to form a homogeneous material sufficiently porous to provide a good bond with portland paste; or factory-graded emery aggregate consisting of not less than 45 percent aluminum oxide and 25 percent ferric oxide. Provide well graded aggregate from particles retained on the 600-µm (No. 30) sieve to particles passing the 2.36-mm (No. 8) sieve.

2.1.9 Strain Gauges

Permanent strain gauges shall be installed in the concrete joints at the locations shown on the culverts in S471 and S473. Submit product data on strain gauges.

2.2 EQUIPMENT

Submit data on placing equipment and methods. The batching, mixing, conveying, and placing equipment must have a capacity of at least 100 cubic yards per hour. Conform the batch plant to the requirements of NRMCA CPMB 100 and as specified; however, rating plates attached to batch plant equipment are not required. Submit batch plant data for conformance with applicable specifications.

2.2.1 Batching Equipment

Use automatic batching controls. Provide the semiautomatic batching system with interlocks such that the discharge device cannot be actuated until the indicated material is within the applicable tolerance. Equip the batching system with an accurate recorder or recorders that meet the requirements of NRMCA CPMB 100. Provide separate bins or compartments for each size group of aggregate and cement, pozzolan, and GGBF slag. Weigh aggregates either in separate weigh batchers with individual scales or cumulatively in one weigh batcher on one scale. Do not weigh aggregate in the same batcher with cement, pozzolan, or GGBF slag. If both cement and pozzolan or GGBF slag are used, they may be batched cumulatively provided that the portland cement is batched first. If measured by mass, do not weigh the mass of the water cumulatively with another ingredient. Interlock water batcher filling and discharging valves so that the discharge valve cannot be opened before the filling valve is fully closed. Provide an accurate mechanical device for measuring and dispensing each admixtured. Interlock each dispenser with the batching and discharging operation of the water so that each admixture is separately batched and discharged automatically in a manner to obtain uniform distribution throughout the batch in the specified mixing period. Do not combine admixtures prior to introduction in water. Arrange the plant to facilitate the inspection of all operations at all times. Provide facilities for obtaining representative samples of aggregates from each bin or compartment. Clearly mark all filling ports for cementitious materials bins or silos with a permanent sign stating the contents. Portable batch plants shall follow the requirements of CRD-C 514-92 "Concrete Plant

Standards of the Concrete Plant Manufacturers Bureau." Submit the product data indicating compliance with this Concrete Plant Standards.

2.2.2 Scales

Provide equipment for batching by mass conforming to the applicable requirements of NIST HB 44, except that the accuracy is plus or minus 0.2 percent of scale capacity. Provide standard test weights and any other auxiliary equipment required for checking the operating performance of each scale or other measuring devices. Perform tests at the frequency required in paragraph TESTS AND INSPECTIONS, and in the presence of a District inspector.

2.2.3 Batching Tolerances

a. Weighing Tolerances

MATERIAL	PERCENT OF REQUIRED MASS
Cementitious materials	0 to plus 2
Aggregate	plus or minus 2
Water	plus or minus 1
Chemical admixture	0 to plus 6

b. Volumetric Tolerances - For volumetric batching equipment, the following tolerances apply to the required volume of material being batched:

Water	Plus or minus 1 percent
Chemical admixtures	Zero to plus 6 percent

2.2.4 Moisture Control

The plant must be capable of ready adjustment to compensate for the varying moisture content of the aggregates and to change the masses of the materials being batched. Provide an electric moisture meter complying with the provisions of COE CRD-C 143 for measuring moisture in the fine aggregate. Arrange the sensing element so that the measurement is made near the batcher charging gate of the sand bin or in the sand batcher.

2.2.5 Concrete Mixers

Do not charge the concrete mixers in excess of the capacity recommended by the manufacturer. Operate the mixers at the drum or mixing blade speed designated by the manufacturer. Maintain the mixers in satisfactory operating condition, and keep the mixer drums free of hardened concrete. Should any mixer at any time produce unsatisfactory results, promptly discontinue its use until it is repaired. Submit concrete mixer data including the make, type, and capacity of concrete mixers proposed for mixing concrete.

2.2.5.1 Stationary Mixers

Concrete plant mixers must be tilting, nontilting, horizontal-shaft, vertical-shaft, or pugmill and provided with an acceptable device to lock

the discharge mechanism until the required mixing time has elapsed. The mixing time and uniformity must conform to all the requirements in ASTM C94/C94M applicable to central-mixed concrete.

2.2.5.2 Truck Mixers

Truck mixers, the mixing of concrete therein, and concrete uniformity must conform to the requirements of ASTM C94/C94M. A truck mixer may be used either for complete mixing (transit-mixed) or to finish the partial mixing done in a stationary mixer (shrink-mixed). Equip each truck with two counters from which it will be possible to determine the number of revolutions at mixing speed and the number of revolutions at agitating speed.

2.2.6 Conveying Equipment

Submit data on the conveying equipment and methods for transporting, handling, and depositing the concrete. Conform the conveying equipment to the following requirements:

2.2.6.1 Buckets

The interior hopper slope shall be not less than 58 degrees from the horizontal, the minimum dimension of the clear gate opening shall be at least five times the nominal maximum-size aggregate, and the area of the gate opening shall not be less than 2 square feet. The maximum dimension of the gate opening shall not be greater than twice the minimum dimension. The bucket gates shall be essentially grout tight when closed and may be manually, pneumatically, or hydraulically operated except that buckets larger than 2 cubic yards shall not be manually operated. The design of the bucket shall provide means for positive regulation of the amount and rate of deposit of concrete in each dumping position.

2.2.6.2 Transfer Hoppers

Concrete may be charged into nonagitating hoppers for transfer to other conveying devices. Transfer hoppers must be capable of receiving concrete directly from delivery vehicles and have conical-shaped discharge features. Equip the transfer hopper with a hydraulically operated gate and with a means of external vibration to effect complete discharge. Do not hold concrete in nonagitating transfer hoppers more than 30 minutes.

2.2.6.3 Trucks

Truck mixers operating at agitating speed or truck agitators used for transporting plant-mixed concrete shall conform to the requirements of ASTM C94/C94M. Nonagitating equipment may be used for transporting plant-mixed concrete over a smooth road when the hauling time is less than 15 minutes. Bodies of nonagitating equipment shall be smooth, watertight, metal containers specifically designed to transport concrete, shaped with rounded corners to minimize segregation, and equipped with gates that will permit positive control of the discharge of the concrete.

2.2.6.4 Chutes

When concrete can be placed directly from a truck mixer, agitator, or nonagitating equipment, the chutes attached to this equipment by the

manufacturer may be used. Use a discharge deflector when required by the District. Separate chutes and other similar equipment will not be permitted for conveying concrete.

2.2.6.5 Belt Conveyors

Design and operate to assure a uniform flow of concrete from mixer to final place of deposit without segregation of ingredients or loss of mortar and provide with positive means for preventing segregation of the concrete at the transfer points and the point of placing. Construct belt conveyors such that the idler spacing does not exceed 36 inches. The belt speed must be a minimum of 300 feet per minute and a maximum of 750 feet per minute. If concrete is to be placed through installed horizontal or sloping reinforcing bars, discharge the conveyor concrete into a pipe or elephant trunk that is long enough to extend through the reinforcing bars.

2.2.6.6 Concrete Pumps

Concrete may be conveyed by positive displacement pump when approved. The pumping equipment must be piston or squeeze pressure. The pipeline must be rigid steel pipe or heavy-duty flexible hose. The inside diameter of the pipe must be at least three times the nominal maximum-size coarse aggregate in the concrete mixture to be pumped but not less than 4 inches. Do not use aluminum pipe.

2.2.7 Vibrators

Use vibrators of the proper size, frequency, and amplitude for the type of work being performed in conformance with the following requirements:

APPLICATION	HEAD DIAMETER (inches)	FREQUENCY (VPM)	AMPLITUDE (inches)
Thin walls, beams, etc.	1-1/4 to 2-1/2	9,000 to 13,500	0.02 to 0.04
General construction	2 to 3-1/2	8,000 to 12,000	0.025 to 0.05

Determine the frequency and amplitude in accordance with COE CRD-C 521.

2.2.8 TEMPERATURE MONITORING SYSTEM FOR MASS CONCRETE

2.2.8.1 Temperature logger

Consist of temperature sensor, microprocessor, and battery encased in polyester resin for protection.

Calculate and store temperature readings of concrete.

Maximum wire length in concrete: 50 feet.

Capable of logging temperature hourly for 28 days.

Handheld reader:

Use to communicate with and collect data from temperature loggers embedded in concrete.

Use to instruct loggers to begin reading, download data from loggers, and upload logger data to computer.

Logger data storage: 999 logger downloads.

Software:

Use system software to transfer data from handheld reader to computer in secure, unalterable, electronic files.

Submit the following:

Tabular data of hourly concrete temperature for each temperature sensor

Tabular data for hourly concrete temperature differential for each temperature sensor

Plot of temperature and temperature differential for each temperature sensor

Heat removal plan

PART 3 EXECUTION

3.1 PREPARATION FOR PLACING

3.1.1 Embedded Items

Before placement of concrete, take care to determine that all embedded items are firmly and securely fastened in place as indicated on the drawings, or required. Embedded items must be free of oil and other foreign matter such as loose coatings or rust, paint, and scale. The embedding of wood in concrete will be permitted only when specifically authorized or directed by the District. Temporarily fill voids in sleeves, inserts, and anchor slots with readily removable materials to prevent the entry of concrete into voids. Welding, including tack welding, will not be permitted on embedded metals within 2 feet of the surface of the concrete.

3.1.2 Concrete on Earth Foundations

Earth surfaces upon which concrete is to be placed must be clean, damp, and free from debris, frost, ice, and standing or running water. Prior to placement of concrete, compact the earth foundation in accordance with Section 31 00 00 EARTHWORK.

3.1.3 Concrete on Rock Foundations

Rock surfaces upon which concrete is to be placed must be clean, free from oil, standing or running water, ice, mud, drummy rock, coating, debris, and loose, semidetached, or unsound fragments. Clean joints in rock to a satisfactory depth, as determined by the District, and to firm rock on the sides. Immediately before the concrete is placed, thoroughly clean all rock surfaces by the use of air-water jets or sandblasting as described in paragraph CONSTRUCTION JOINT TREATMENT. Keep all rock surfaces continuously wet for at least 24 hours immediately prior to placing concrete thereon. Cover all approximately horizontal surfaces immediately before the concrete

is placed with a layer of mortar proportioned similar to that in the concrete mixture. Cover the mortar with concrete before the time of initial setting of the mortar.

3.1.4 Construction Joint Treatment

Submit the method and equipment proposed for joint cleanup and waste disposal, for review and approval. Conform construction joint treatment to the following requirements. Submit locations of construction joints. Submit sequencing plan for concrete pours.

3.1.4.1 Joint Preparation

Prepare concrete surfaces to which additional concrete is to be bonded for receiving the next lift or adjacent concrete by cleaning with either air-water cutting, sandblasting, high-pressure water jet, or other approved method. Air-water cutting will not be permitted on formed surfaces or surfaces congested with reinforcing steel. Regardless of the method used, the resulting surfaces must be free from all laitance and inferior concrete so that clean, well bonded coarse aggregate is exposed uniformly throughout the lift surface. Do not undercut the edges of the coarse aggregate. Wash the surface again as the last operation prior to placing the next lift. No standing water is allowed on the surface upon which concrete is placed.

3.1.4.2 Air-Water Cutting

Perform air-water cutting of a construction joint at the proper time and only on horizontal construction joints. The air pressure used in the jet must be 90 to 110 psi, and the water pressure must be just sufficient to bring the water into effective influence of the air pressure. When approved by the District, a retarder complying with the requirements of COE CRD-C 94 may be applied to the surface of the lift to prolong the period of time during which air-water cutting is effective. Prior to receiving approval, furnish samples of the material to be used and demonstrate the method to be used in applications. After cutting, wash and rinse the surface long as there is any trace of cloudiness of the wash water. Where necessary to remove accumulated laitance, coatings, stains, debris, and other foreign material, high-pressure water jet or sandblasting will be required as the last operation before placing the next lift.

3.1.4.3 High-Pressure Water Jet

A stream of water under a pressure of not less than 6,500 psi at 8.0 gpm may be used for cleaning. Delay its use until the concrete is sufficiently hard so that only the surface skin or mortar is removed and there is no undercutting of coarse-aggregate particles. If the water jet is incapable of a satisfactory cleaning, clean the surface by sandblasting.

3.1.4.4 Wet Sandblasting

This method may be used when the concrete has reached sufficient strength to prevent undercutting of the coarse aggregate particles. Then thoroughly wash the surface of the concrete to remove all loose materials.

3.1.4.5 Waste Disposal

Dispose of the waste water employed in cutting, washing, and rinsing of concrete surfaces such that the waste water does not stain, discolor, or affect exposed surfaces of the structures, or damage the environment of the project area. The method of disposal is subject to approval.

3.2 CONVEYING AND PLACING CONCRETE

Convey and place concrete in accordance with ACI 301, Section 5. Do not reconstitute concrete that has begun to solidify. Cure concrete in accordance with Section 03 39 00.00 10 CONCRETE CURING.

3.2.1 Cold-Weather Requirements

Place concrete in cold weather in accordance with ACI 306R.

3.2.2 Hot-Weather Requirements

Place concrete in hot weather in accordance with ACI 305R. In addition, concrete temperature measured at point of placement shall not exceed 90 degrees. Ice or other means shall be used to achieve this.

3.2.3 Placing Concrete in Ogee Section

Finish the unformed portion of the ogee section by placing concrete slightly above grade and striking off to grade by accurate screeding. Screeding may be accomplished by semi mechanical devices or by a mechanical screed that consolidates and screeds the surface in one operation. Ribs embedded in the fresh concrete as guides for screeds will not be permitted.

3.2.4 Placing Concrete Underwater

Tremie Concrete shall be placed per ACI 301 Chapter 8 for placing concrete underwater.

Starting Placement

a. Prior to Tremie Concrete placement, the CONTRACTOR shall use proper means to prevent flow of water across or through the placement site.

b. The Contractor shall determine the spacing of tremie pipes for concrete placement, but shall maintain a minimum of one pipe for each 300 square feet of concrete placed.

c. Tremie started using the end plate, dry pipe technique shall be filled with concrete before being raised off the bottom. The pipe shall be initially raised sufficiently to establish a mound around the mouth of the tremie pipe.

d. Tremie started using a go-devil shall be lifted a maximum of 6-inches to allow water to escape, then concrete shall be added to the tremie slowly to force the go-devil downward. Once the go-devil reaches the mouth of the tremie, the tremie shall be lifted to allow the escape of the go-devil, and the forming of a mound around the mouth of the pipe.

e. Tremie pipe shall be adequately embedded in the fresh concrete, and slowly raised so as to prevent "loss of seal". Should a "loss of seal" occur in a tremie, placement through that tremie must be terminated

immediately, and the tremie pipe removed. The flow must be restarted with the end plate, dry pipe technique, a go-devil shall not be used to restart a tremie after loss of seal.

Placing

a. Placement of concrete shall be as continuous as possible through the tremie. Placement interruptions less than 30 minutes are allowed to restart without any special procedure. Placement interruptions between 30 minutes and the initial setting time shall be treated by removal, resealing, and restarting the tremie.

b. Placement interruptions longer than the initial setting time are to be treated as horizontal construction joints. The concrete surface shall be "green cut" by a diver after it sets. The concrete surface shall be water jetted immediately prior to resuming concrete placement.

c. The rate of concrete rise shall be established based on the concrete production of the local area and the spacing of the pipes. The volume of concrete shall be monitored throughout the placement to detect placement problems, such as underrun or overrun. Should underrun or overrun occur, corrective actions such as readjusting the rate of concrete rise, and alternating the pipe spacing shall be taken to ensure proper placement.

d. Tremie blockage shall be cleared with caution to prevent "loss of seal".

e. The pipe delivering concrete must be secured and remain fixed horizontally while concrete is flowing, so as not to damage the concrete surface, and create additional laitance, and lead to "loss of seal".

Post-Placement Evaluation

a. Concrete placed underwater shall be evaluated after completion of placing with, but not limited to the methods below.

b. Coring in area of maximum concrete flow, or in area where "loss of seal" occurred during placement.

c. After de-watering, accurately surveying the entire concrete surface to evaluate the adequacy of the concrete placement, such as cracks, voids, and honeycomb. The defects shall be clearly marked for repair. The concrete shall be protected from dryness, or damages until repairs are completed.

d. As determined by the District, the area of questionable concrete quality shall be cored and tested for compressive strength.

3.2.5 Mass Concrete

3.2.5.1 Concrete placement

Place mass concrete as specified above except as modified.

Do not place non-mass concrete with mass concrete.

Do not place non-mass concrete until after Thermal Control period for adjoining mass concrete is complete.

3.2.5.2 Sequencing the S-471, S-473, S-479 and S-480 culverts

See Drawings for the alternative placement pattern requirements and the phases for the culvert monoliths construction.

Alternate sections may be poured simultaneously. This includes slabs, walls and top slabs. However, walls and slabs may not be poured simultaneously.

Adjacent pours may be made once the thermistors on each side have reached ambient temperature.

Ambient temperature is defined as the mean average daily temperature (Fahrenheit) by month plus 4 degrees Fahrenheit.

Wall concrete shall reach full strength of 4500 psi before any backfill is placed against it.

3.2.5.3 Curing concrete

Water cure or plastic membrane cure as soon as possible following placement of concrete. See Section 03 39 00.00 10 Concrete Curing.

If water curing is used, use methods that minimize differential temperature between curing water and concrete. If non potable water is used for water curing, s~~S~~ubmit chemical analysis of water used for curing with levels of chlorides and sulfates.

Identify curing methods in Mass Concrete Thermal Control Plan. Plan and properly reflect in Mass Concrete Thermal Control Plan.

3.2.5.4 Insulation

If insulation is required by Mass Concrete Thermal Control Plan, install insulation on following during Thermal Control Period: Formed surfaces.

Finished surface such as top of slabs.

Temporary surfaces such as construction joints.

Reinforcing bars protruding 6'-0" from concrete placements.

Steel braces and catwalk supports attached to formwork.

Pipes protruding from concrete placement.

Conduits protruding from concrete placement.

Minimum of 3 feet past concrete placement onto previously placed adjacent concrete.

Other items protruding from concrete that would contribute to heat loss from concrete.

Install insulation blankets on complete area of formwork that extends past concrete placement.

Install insulation blankets tightly against formwork to prevent air movement between insulating blankets and forms.

Install insulation on formwork before placing mass concrete.

Install insulation on finished surfaces when: Finishing is complete.

Concrete has sufficient strength to prevent damage due to installation of insulation.

Before excessive temperature differential develops.

3.2.5.5 Protruding reinforcing bars, conduits, and pipes

For 1-inch diameter, or minimum dimension, and smaller, insulate for minimum of 3 feet from face of concrete placement.

For diameter, or minimum dimension, greater than 1 inch, insulate for minimum of 6 feet from face of concrete placement.

Use insulation with R-Value equal to or greater than required for adjacent surface of concrete placement.

Install insulation before placing mass concrete.

Insulation shall remain in place until end of Thermal Control period.

3.2.6 Cold weather concreting

Do not use steam or other concrete heating methods that will increase concrete temperature.

3.2.7 Hot weather concreting

As specified in ACI 305R.

Use fog sprayers to reduce ambient air temperature and increase humidity during concrete placement.

3.3 TAMPING AND VIBRATING

As concrete is placed in the forms or in excavations, it shall be thoroughly consolidated. The consolidation shall be through the entire lift which is being placed. The entire lift shall be consolidated into a dense homogenous mass, filling all corners and angles, thoroughly embedding the reinforcement, eliminating rock pockets, and bringing only a slight excess of water to the exposed surface of concrete. Vibrators shall be Group 3 per ACI 309, high speed power vibrators (8,000 to 12,000 rpm) of an immersion type in sufficient number and with at least one standby unit as required. Group 2 vibrators may be used only at specific locations when accepted by the District. Tremie concrete shall not be vibrated.

Care shall be used in placing concrete around waterstops. The concrete shall be carefully vibrated such that the waterstop does not fold or is otherwise distorted.

3.4 SETTING BASE PLATES AND BEARING PLATES

3.4.1 Setting of Plates

After being plumbed and properly positioned, provide column base plates, bearing plates for beams and similar structural members, and machinery and equipment base plates with full bearing with nonshrink grout. The space between the top of concrete or masonry-bearing surface and the bottom of the plate must be approximately 1/24 of the width of the plate, but not less than 1/2 inch for plates less than 12 inches wide. Concrete surfaces must be rough, clean, and free of oil, grease, and laitance, and damp. Clean metal surfaces free of oil, grease, and rust.

3.4.2 Nonshrink Grout Application

Water content must be the minimum that will provide a flowable mixture and fill the space to be grouted without segregation, bleeding, or reduction of strength.

3.4.2.1 Mixing and Placing of Nonshrink Grout

Mix and place in accordance with the material manufacturer's instructions and as specified. Thoroughly dry-mix ingredients before adding water. After adding water, mix the batch for 3 minutes. Size batches to allow continuous placement of freshly mixed grout. Discard grout not used within 30 minutes after mixing. Fill the space between the top of the concrete or masonry-bearing surface and the plate solid with the grout. Use forms of wood or other equally suitable material for retaining the grout and remove after the grout has set. If grade "A" grout as specified in ASTM C1107/C1107M is used, form all surfaces to provide restraint. Work the placed grout to eliminate voids; however, avoid overworking and breakdown of the initial set. Do not be retemper or subject grout to vibration from any source. Where clearances are unusually small, place grout under pressure with a grout pump. Maintain temperature of the grout, and of surfaces receiving the grout, at 65 to 85 degrees F until after setting.

3.4.2.2 Treatment of Exposed Surfaces

After the grout has set, cut back the exposed surfaces of those types containing metallic aggregate 1 inch and immediately cover with a parge coat of mortar proportioned by mass of one part portland cement, two parts sand, and sufficient water to make the mixture placeable. The parge coat must have a smooth, dense finish. The exposed surface of other types of nonshrink grout must have a smooth, dense finish.

3.4.2.3 Curing

Cure grout and parge coats in accordance with Section 03 39 00.00 10 CONCRETE CURING.

3.5 TESTS AND INSPECTIONS

Submit test results and inspection reports, daily and weekly. Tests and inspect in accordance the following:

3.5.1 General

Perform the inspections and tests described below, and, based upon the results of these inspections and tests, take the action required and submit reports as required. When, in the opinion of the District, the concreting operation is out of control, cease concrete placement. Locate the laboratory performing the tests on site and conform to ASTM C1077. The District will inspect the laboratory, equipment, and test procedures prior to start of concreting operations and at least once per year thereafter for conformance with ASTM C1077.

3.5.2 Testing and Inspection Requirements

3.5.2.1 Fine Aggregate

3.5.2.1.1 Grading

At least once during each shift when the concrete plant is operating, perform one sieve analysis and fineness modulus determination in accordance with ASTM C136/C136M and COE CRD-C 104 for the fine aggregate or for each size range of fine aggregate if it is batched in more than one size or classification. The location at which samples are taken may be selected by the Contractor as the most advantageous for control. However, the Contractor is responsible for delivering fine aggregate to the mixer within specification limits.

3.5.2.1.2 Corrective Action for Fine Aggregate Grading

When the amount passing on any sieve is outside the specification limits, immediately resample and retest the fine aggregate. If there is another failure on any sieve, immediately report to the District.

3.5.2.1.3 Moisture Content Testing

When in the opinion of the District the electric moisture meter is not operating satisfactorily, perform at least four tests for moisture content in accordance with ASTM C566 during each 8-hour period of mixing plant operation. Randomly select the times for the tests within the 8-hour period. Make an additional test whenever the slump is shown to be out of control or excessive variation in workability is reported by the placing foreman. When the electric moisture meter is operating satisfactorily, make at least two direct measurements of moisture content per week to check the calibration of the meter. Use the results of tests for moisture content to adjust the added water in the control of the batch plant.

3.5.2.1.4 Moisture Content Corrective Action

Whenever the moisture content of the fine aggregate changes by 0.5 percent or more, adjust the scale settings for the fine-aggregate batcher and water batcher (directly or by means of a moisture compensation device) if necessary to maintain the specified slump.

3.5.2.2 Coarse Aggregate

3.5.2.2.1 Grading

At least once during each shift in which the concrete plant is operating, conduct a sieve analysis in accordance with ASTM C136/C136M for each size of coarse aggregate. The location at which samples are taken may be selected by the Contractor as the most advantageous for production control. A test record of samples of aggregate taken at the same locations must show the results of the current test as well as the average results of the five most recent tests including the current test. The Contractor may adopt limits for control which are coarser than the specification limits for samples taken at locations other than as delivered to the mixer to allow for degradation during handling.

3.5.2.2.2 Corrective Action for Grading

When the amount passing any sieve is outside the specification limits, immediately resample and retest the coarse aggregate. If the second sample fails on any sieve, report that fact to the District. Where two consecutive averages of five tests are outside specification limits, consider the operation out of control and report to the District. Stop concreting and take immediate steps to correct the grading.

3.5.2.2.3 Coarse Aggregate Moisture Content

Make a test for moisture content of each size group of coarse aggregate at least twice per week. When two consecutive readings for smallest size coarse aggregate differ by more than 1.0 percent, increase frequency of testing to that specified above for fine aggregate, until the difference falls below 1.0 percent.

3.5.2.2.4 Coarse Aggregate Moisture Corrective Action

Whenever the moisture content of any size of coarse aggregate changes by 0.5 percent or more, adjust the scale setting for the coarse aggregate batcher and the water batcher if necessary to maintain the specified slump.

3.5.2.3 Quality of Aggregates

Submit aggregate quality tests at least 30 days prior to start of concrete placement.

3.5.2.3.1 Frequency of Quality Tests

Thirty days prior to the start of concrete placement, perform all tests for aggregate quality listed below. In addition, after the start of concrete placement, perform tests for aggregate quality in accordance with the frequency schedule shown below. Take samples tested after the start of concrete placement immediately prior to entering the concrete mixer.

FREQUENCY			
PROPERTY	**FINE AGGREGATE**	**COARSE AGGREGATE**	**TEST**
Specific Gravity	Every 3 months	Every 3 months	ASTM C127 ASTM C128
Absorption	Every 3 months	Every 3 months	ASTM C127 ASTM C128
Durability Factor (using Procedure A)	Every 12 months	Every 12 months	COE CRD-C 114 ASTM C666/C666M
Clay Lumps and Friable Particles	Every 3 months	Every 3 months	ASTM C142/C142M
Material Finer than No. 200 Sieve	Not applicable	Every 3 months	ASTM C117
Impurities	Every 3 months	Not applicable	ASTM C40/C40M ASTM C87/C87M
L.A. Abrasion	Not applicable	Every 6 months	ASTM C131/C131M ASTM C535
Soft and Friable (Scratch Hardness)	Not applicable	Every 6 months	COE CRD-C 130
Chert, less than 2.40 specific gravity	Every 6 months	Every 6 months	ASTM C123/C123M
Coal and Lignite, less than less than 2.00 specific gravity	Every 6 months	Every 6 months	ASTM C123/C123M

3.5.2.3.2 Corrective Action for Aggregate Quality

If the result of a quality test fails to meet the requirements for quality immediately prior to start of concrete placement, change production procedures or materials and perform additional tests until the material meets the quality requirements prior to proceeding with either mixture proportioning studies or starting concrete placement. After concrete placement commences, whenever the result of a test for quality fails the requirements, immediately rerun the test. If the second test fails the quality requirement, report the fact to the District and take immediate steps to rectify the situation.

3.5.2.4 Scales

3.5.2.4.1 Weighing Accuracy

Check the accuracy of the scales by test weights prior to start of concrete operations and at least once every 3 months for conformance with the applicable requirements of paragraph BATCHING EQUIPMENT. Also make such tests as directed whenever there are variations in properties of the fresh concrete that could result from batching errors.

3.5.2.4.2 Batching and Recording Accuracy

Once a week check the accuracy of each batching and recording device during a weighing operation by noting and recording the required weight, recorded weight, and the actual weight batched. Confirm that the calibration devices

described in paragraph EQUIPMENT, for checking the accuracy of dispensed admixtures, are operating properly.

3.5.2.4.3 Scales Corrective Action

When either the weighing accuracy or batching accuracy does not comply with specification requirements, do not operate the plant until necessary adjustments or repairs have been made. Correct discrepancies in recording accuracies immediately.

3.5.2.5 Batch-Plant Control

Continuously control the measurement of all constituent materials including cementitious materials, each size of aggregate, water, and admixtures. Adjust the aggregate weights and amount of added water as necessary to compensate for free moisture in the aggregates. Adjust the amount of air-entraining agent to control air content within specified limits. Prepare a report indicating type and source of cement used, type and source of pozzolan or slag used, amount and source of admixtures used, aggregate source, the required aggregate and water weights per cubic yard, amount of water as free moisture in each size of aggregate, and the batch aggregate and water weights per cubic yard for each class of concrete batched during plant operation.

3.5.2.6 Concrete Mixture

3.5.2.6.1 Air Content Testing

Conduct air content tests when test specimens are fabricated. In addition, make at least two tests for air content on randomly selected batches of each separate concrete mixture produced during each 8-hour period of concrete production. Make additional tests when excessive variation in workability is reported by the placing foreman or District's quality assurance representative. Conduct tests in accordance with ASTM C231/C231M. Plot test results on control charts which at all times are readily available to the District. Keep copies of the current control charts in the field, by the Contractor's representatives, and plotted results as tests are made. When a single test result reaches either the upper or lower action limit immediately conduct a second test. Average the results of the two tests and use this average as the air content of the batch to plot on both the control chart for air content and the control chart for range, and for determining the need for any remedial action. Plot the result of each test, or average as noted in the previous sentence, on a separate chart for each mixture on which an "average line" is set at the midpoint of the specified air content range from paragraph AIR CONTENT. Set an upper warning limit and a lower warning limit line 1.0 percentage point above and below the average line. Set an upper action limit and a lower action limit line 1.5 percentage points above and below the average line, respectively. Plot the range between each two consecutive tests on a control chart for range where an upper warning limit is set at 2.0 percentage points and up upper action limit is set at 3.0 percentage points. Samples for air content may be taken at the mixer, however, the Contractor is responsible for delivering the concrete to the placement site at the stipulated air content. If the materials or transportation methods cause air content loss between the mixer and the placement, take correlation samples at the placement site as required by the District and control the air content at the mixer as directed.

3.5.2.6.2 Air Content Corrective Action

Whenever points on the control chart for percent air reach either warning limit, immediately adjust the amount of air-entraining admixture batched. As soon as is practical after each adjustment, conduct another test to verify the result of the adjustment. Whenever a point on the control chart range reaches the warning limit, recalibrate the admixture dispenser to ensure that it is operating accurately and with good reproducibility. Whenever a point on either control chart reaches an action limit line, the air content is considered out of control and the contractor shall immediately halt the concreting operation until the air content is under control. Make additional air content tests when concreting is restarted.

3.5.2.6.3 Slump Testing

In addition to slump tests made when test specimens are fabricated, make at least four slump tests on randomly selected batches in accordance with ASTM C143/C143M for each separate concrete mixture produced during each 8-hour or less period of concrete production each day. Also, make additional tests shall when excessive variation in workability is reported by the placing foreman or District's quality assurance representative. Plot test results on control charts, which are readily available to the District at all times. Keep copies of the current control charts in the field by the Contractor's quality control representatives and plot results as tests are made. When a single slump test reaches or goes beyond either the upper or lower action limit, immediately make a second test on the same batch of concrete. Average the results of the two tests and use this average as the slump of the batch to plot on both the control chart for percent air and the chart for range, and for determining the need for any remedial action. Set an upper warning limit at 1/2 inch below the maximum allowable slump on separate control charts for percent air used for each type of mixture as specified in paragraph SLUMP, and set an upper action limit line and lower action limit line at the maximum and minimum allowable slumps, respectively, as specified in the same paragraph. Plot the range between each consecutive slump test for each type of mixture on a single control chart for range on which an upper action limit is set at 2 inches. Take samples for slump at the mixer, however, the Contractor is responsible for delivering the concrete to the placement site at the stipulated slump. If the materials or transportation methods cause slump loss between mixer and the placement, take correlation samples at the placement site as required by the District and control the slump at the mixer as directed.

3.5.2.6.4 Slump Corrective Action

Whenever points on the control chart for slump reach the upper warning limit, immediately adjust the batch weights of water and fine aggregate. Make adjustments so that the total water content does not exceed that amount allowed by the maximum W/C specified, based upon aggregates which are in a saturated surface-dry condition. When a single slump reaches the upper or lower action limit, no further concrete may be delivered to the placing site until proper adjustments have been made. Immediately after each adjustment, make another test to verify the correctness of the adjustment. Whenever two consecutive slump tests, made during a period when there was no adjustment of batch weights, produce a point on the control chart for range at or above the upper action limit, immediately halt the concreting operation and take

appropriate steps to bring the slump under control. Also, make additional slump tests as directed.

3.5.2.6.5 Temperature

Measure the temperature of the concrete when compressive strength specimens in paragraph entitled, "Compressive-Strength Specimens," are fabricated. Measure in accordance with ASTM C1064/C1064M. Report the temperature along with the compressive strength data.

3.5.2.6.6 Compressive-Strength Specimens

Obtain samples and test concrete for quality control during placement. Sample fresh concrete for testing in accordance with ASTM C172/C172M. Make six test cylinders. Test concrete for compressive strength at 7 and 28 days for each design mix. Prepare six samples for each pour, and for every 100 cubic yards of concrete placed in the same day thereafter. Test two cylinders at 7 days; two cylinders at 28 days; and hold two cylinders in reserve. Prepare concrete test specimens in accordance with ASTM C31/C31M. Perform compressive strength testing in accordance with ASTM C39/C39M.

3.5.2.7 Inspection Before Placing

Inspect foundation or construction joints, forms, and embedded items for quality in sufficient time prior to each concrete placement to certify to the District that they are ready to receive concrete. No concrete shall be placed until all formwork, installation of parts to be embedded, reinforcement steel, and preparation of surfaces involved have been completed and accepted by the District at least 8 hours before placement of concrete. Report the results of each inspection in writing.

A District quality assurance representative shall be scheduled at least 24 hours in advance to attend and observe each pour. No pours shall commence until a district representative is on site.

3.5.2.8 Placing

3.5.2.8.1 Placing Inspection

The placing foreman supervises all placing operations, determines that the correct quality of concrete or grout is placed in each location as directed and is for measuring and recording concrete temperatures and ambient temperature hourly during placing operations, weather conditions, time of placement, yardage placed, and method of placement.

3.5.2.8.2 Placing Corrective Action

The placing foreman must not permit batching and placing to begin until he has verified that an adequate number of vibrators in working order and with competent operators are available. Discontinue placing if any pile of concrete is inadequately consolidated. If any batch of concrete fails to meet the temperature requirements, take immediate steps to improve temperature controls.

3.5.2.9 Vibrators

3.5.2.9.1 Vibrator Testing and Use

Determine the frequency and amplitude of each vibrator in accordance with COE CRD-C 521 prior to initial use and at least once a month when concrete is being placed. Make additional tests as directed when a vibrator does not appear to be adequately consolidating the concrete. Determine the frequency at the same time the vibrator is operating in concrete with the tachometer held against the upper end of the vibrator head while almost submerged and just before the vibrator is withdrawn from the concrete. Determine the amplitude with the head vibrating in air. Take two measurements, one near the tip and another near the upper end of the vibrator head and average these results. Report the make, model, type, and size of the vibrator and frequency and amplitude results in writing.

3.5.2.9.2 Vibrator Corrective Action

Immediately remove any vibrator not meeting the requirements of paragraph VIBRATORS from service and repair or replace.

At least two working vibrators shall be available for any pour or one more than the work plan required. These shall be presented and operated at the pre-pour conference. They shall be of a size, capacity and length to reach the bottom of the forms, with enough slack to feel the bottom of the pour. One of these vibrators shall be available for a spare.

3.5.2.10 Mixer Uniformity

Submit the results of the initial mixer uniformity tests, at least 5 days prior to the initiation of placing.

3.5.2.10.1 Stationary Mixers

Prior to the start of concrete placing and once every 6 months when concrete is being placed, or once for every 75,000 cubic yards of concrete placed, whichever results in the longest time interval, determine uniformity of concrete mixing in accordance with ASTM C94/C94M.

3.5.2.10.2 Truck Mixers

Prior to the start of concrete placing and at least once every 6 months when concrete is being placed, determine uniformity of concrete in accordance with ASTM C94/C94M. Randomly select the truck mixers for testing. When satisfactory performance is found in one truck mixer, the performance of mixers of substantially the same design and condition of the blades may be regarded as satisfactory.

3.5.2.11 Mixer Uniformity Corrective Action

When a mixer fails to meet mixer uniformity requirements, either remove the mixer from service on the work, increase the mixing time, change the batching sequence, reduce the batch size, or adjust the mixer until compliance is achieved.

3.5.3 Reports

Report all results of tests or inspections conducted informally as they are completed and in writing daily. Prepare a weekly report for the updating of control charts covering the entire period from the start of the construction season through the current week. During periods of cold-weather protection, make reports of pertinent temperatures daily. These requirements do not relieve the Contractor of the obligation to report certain failures immediately as required in preceding paragraphs. Confirm such reports of failures and the action taken in writing in the routine reports. The District has the right to examine all test and inspection records.

3.6 DEFECTIVE CONCRETE

Any concrete which is not formed as shown on the Drawings or does not conform to the Contract tolerances or shows defects which reduce its structural adequacy, shall be removed from the job by the CONTRACTOR at his expense unless the DISTRICT grants written permission to patch the defective area.

3.6.1 Exposed Concrete Surfaces

As soon as forms are removed, exposed surfaces shall be carefully examined and all ridges, ribs and other imperfections shall be rubbed with an abrasive stone or ground in a satisfactory manner in order to secure a smooth, uniform and continuous surface. Plastering or coating of surfaces to be smoothed will not be permitted.

No repairs shall be made until after inspection by the District. In no case will extensive patching of honeycombed concrete be permitted.

Concrete containing minor voids, pinholes, honeycombing, or similar depression defects shall be repaired as indicated below. Concrete containing extensive voids, holes, honeycombing, or similar depression defects shall be completely removed and replaced. Repairs and replacements shall be performed promptly.

3.7 CARE AND REPAIR OF CONCRETE

The Contractor shall protect concrete against injury or damage from excessive heat, lack of moisture, overstress, or any other cause until final acceptance. Particular care shall be taken to prevent the drying of concrete and to avoid roughening or otherwise damaging the surface. Any concrete found to be damaged, or which may have been originally defective, or which becomes defective at any time prior to the final acceptance of the completed Work, or which departs from the established line or grade, or which, for any other reason, does not conform to the requirements of the Contract Documents, shall be satisfactorily repaired or removed and replaced with acceptable concrete.

-- End of Section --

SECTION 03 31 27

CONCRETE ADMIXTURE WATERPROOFING

PART 1 GENERAL

1.1 SCOPE

Summary of Work: The Work of this SECTION specifies crystalline waterproofing admixture for use with new concrete, cast-in-place concrete and/or self-consolidating concrete (SCC) required by the Contract Documents.

Related Work Specified Elsewhere:

Section 01 33 00 SUBMITTAL PROCEDURES

1.2 APPLICABLE STANDARDS AND PUBLICATIONS

Standards or Codes: The edition of the standards of the organizations listed below in effect at the time of the advertisement for bids form a part of this specification to the extent referenced. In the case of a conflict between the requirements of this Section and those of the listed document, the requirements of this Section shall prevail.

AMERICAN CONCRETE INSTITUTE (ACI)

ACI 117 - Standard Tolerance for Concrete Construction and Materials

ACI 212.3R - Report on Chemical Admixtures for Concrete

ASTM INTERNATIONAL (ASTM)

ASTM C1202	(2012) Standard Test Method for Electrical Indication of Concrete's Ability to Resist Chloride Ion Penetration

ASTM C494 - Standard Specification for Chemical Admixtures for Concrete

US ARMY CORPS OF ENGINEERS (USACE)

USACE CRD-C48-73	Method of Test for Water Permeability of Concrete

NSF INTERNATIONAL (NSF)

NSF/ANSI 61	(2016) Drinking Water System Components - Health Effects

1.3 SUBMITTALS

Submittals shall be in accordance with Section 01 33 00 SUBMITTAL PROCEDURES:

SD-03 Product Data

Mix Designs with crystalline waterproofing admixture

SD-06 Test Reports

Certified Test Reports

Permeability Test Results

SD-07 Certificates

Product Certificates

SD-08 Manufacturer's Instructions

Manufacturer's Installation Instructions

SD-09 Manufacturer's Field Reports

Manufacturer's Field Reports

1.3.1 Installers Quality Requirements

Qualifications:

a. Installer: Experienced in performing Work of this Section who has specialized in installation of work similar to that required for this Project.

b. Manufacturer: Capable of providing field service representation during construction and approving application method.

Regulatory Requirements: Provide admixture that complies with requirements as follows:

a. NSF/ANSI 61, Drinking Water System Components - Health Effects

b. USACE CRD-C48-73 Standard Test Method for Water Permeability of Concrete

Preinstallation Meetings: Conduct preinstallation meeting to verify Project requirements, Manufacturer's installation instructions and Manufacturer's warranty requirements.

1.3.2 Mix Designs

Prior to beginning the Work and within forty-two (42) days of the Notice to Proceed, the Contractor shall submit preliminary concrete mix designs which shall show the proportions and gradations of all materials, including crystalline waterproofing admixture, proposed for each class and type of concrete. Mix designs shall be checked by an independent testing laboratory acceptable to the District. Laboratories for testing concrete must be certified by the MCX from ERDC. All costs related to such checking shall be Contractor's responsibility.

1.4 WARRANTY

The warranty shall meet the requirements specified in SECTION 01 61 03 EQUIPMENT AND MATERIALS.

PART 2 MATERIALS

2.1 CRYSTALLINE WATERPROOFING

MANUFACTURERS:

1. ICS Penetron International Ltd.

2. Xypex Chemical Corporation

3. Kryton International Inc.

The concrete with the crystalline waterproofing admixture shall have following properties:

1. Permeability: 1.2mm (3/64 inch) after 120 hours (5 days), USACE CRD C48.

2. Compressive Strength of Concrete: in accordance with Section 03 31 01.00 10 CAST-IN-PLACE STRUCTURAL CONCRETE FOR CIVIL WORKS.

A single Manufacturer for the crystalline waterproofing materials shall be used throughout the Work, and prior to its use, the brand shall be accepted by the District.

Provide the following for the material selected:

1. Test Reports: Submit certified test reports showing compliance with specified performance characteristics and physical properties. Indicate volatile organic compounds (VOCs) during application.

2. Certificates: Submit product certificates signed by Manufacturer certifying materials comply with specified performance characteristics and criteria and with physical requirements.

3. Manufacturer's Installation Instructions: Submit Manufacturer's written installation instructions.

4. The Contractor shall submit permeability test results using both the USACE CRD-C48-73 Method and ASTM C1202 Method, for each compressive strength test samples. The concrete shall have a permeability that meets paragraph entitled, "Crystalline Waterproofing," in this Section.

PART 3 EXECUTION

3.1 PERFORMANCE REQUIREMENTS

Provide concrete concentrate admixture that has been manufactured and added to concrete mix at time of concrete batching to maintain performance criteria stated by Manufacturer without defects, damage or failure.

Coordinate and schedule addition of concrete admixture with concrete batching.

3.2 MANUFACTURER'S INSTRUCTIONS

Compliance: Comply with Manufacturer's written data, including product technical bulletins, product catalog installation instructions, product installation instructions and specifications.

All concrete Work shall be in accordance with Section 03 31 01.00 10, CAST-IN-PLACE STRUCTURAL CONCRETE FOR CIVIL WORKS.

3.3 APPLICATION PROCEDURES

Add crystalline waterproofing admixture to concrete at time of batching at the dosage rate of 2% by weight of cement content, including silica fume, slag or flyash. The procedure sequence for addition varies according to type of batch, plant operation and equipment. Add crystalline waterproofing admixture to concrete at time of batching at the dosage rate recommended by the manufacturer of cement content. The procedure sequence for addition varies according to type of batch, plant operation and equipment.

1. Ready-Mix Plant, Dry Batch Operation: Add crystalline waterproofing admixture in powder form to drum of ready-mix truck. Add 70% of required water along with 400 pounds (lbs) of aggregate. Mix materials for three (3) minutes minimum to ensure crystalline waterproofing admixture is distributed evenly throughout mix water. Add balance of materials in accordance with standard batch practices.

2. Ready-Mix Plant, Central Mix Operation: Mix crystalline waterproofing admixture with water to form thin slurry in ratio fifteen (15) lb powder to three (3) gallons of water. Pour required amount of material into drum of ready-mix truck. Pour concrete into truck and mix for five (5) minutes minimum to ensure even distribution of crystalline waterproofing admixture throughout concrete.

    a. Ensure aggregate, cement and water are batched and mixed in plant in accordance with standard practices and taking into account quantity of water that has already been placed in ready-mix truck.

3. Precast Batch Plant, Pan-Type Mixer: Add crystalline waterproofing admixture to aggregate and mix thoroughly for three (3) minutes minimum prior to adding cement and water.

    a. Ensure total concrete mass is blended using standard practices.

    b. Obtain homogeneous mixture of crystalline waterproofing admixture with concrete.

    c. Do not add dry crystalline waterproofing admixture directly to wet concrete.

3.4 CURING

Curing shall be in accordance with Section 03 39 00.00 10 CONCRETE CURING.

3.5 FIELD QUALITY CONTROL

The Manufacturer of the crystalline waterproofing admixture supplied under this Section shall be involved in handling, installation, application and

protection of product(s), and submit written report in acceptable format to verify compliance of Work.

Manufacturer's Field Services: Have Manufacturer's technical representative schedule Site visits to review Work during delivery and pouring of concrete.

3.6 MANUFACTURER'S FIELD REPORTS

Submit Manufacturer's field reports specified.

-- End of Section --

SECTION 03 35 00.00 10

CONCRETE FINISHING

PART 1 GENERAL

1.1 REFERENCES

The publications listed below form a part of this specification to the extent referenced. The publications are referred to within the text by the basic designation only.

AMERICAN CONCRETE INSTITUTE INTERNATIONAL (ACI)

ACI 301	(2016) Specifications for Structural Concrete
ACI 305R	(2010) Guide to Hot Weather Concreting
ACI 305R	(2010) Guide to Hot Weather Concreting

ASTM INTERNATIONAL (ASTM)

ASTM C309	(2011) Standard Specification for Liquid Membrane-Forming Compounds for Curing Concrete

1.2 SUBMITTALS

Submit the following in accordance with Section 01 33 00 SUBMITTAL PROCEDURES:

SD-04 Samples

Field Test Panels

Sample Wall Panels

Slab Panels

SD-08 Manufacturer's Instructions

Dry Shake Finish

1.3 QUALITY REQUIREMENTS

1.3.1 Field Test Panels

Construct field test panels prior to beginning of work using the materials and procedures proposed for use on the job, to demonstrate the results to be attained. The quality and appearance of each panel is subject to the approval of the District, and, if not judged satisfactory, construct additional panels until approval is attained. Formed or finished surfaces in the completed structure must match the quality and appearance of the approved field example.

1.3.1.1 Sample Wall Panels

For cast in place panels, construct one sample panel at least 4 feet by 5 feet and 6 inches thick to demonstrate Class A formed finish and a similar one for Class B formed finish. Each panel must include a full length and full width joint line and have at least two voids each at least 12 inches by 12 inches by 3 inches deep either impressed in the concrete as placed or chipped in the hardened concrete. After the concrete is 7 days old, patch the voids to demonstrate the effectiveness and the appearance of the Contractor's repair procedures. Also see Section 03 11 13.00 10 STRUCTURAL CAST-IN-PLACE CONCRETE FORMING.

1.3.1.2 Slab Panels

Construct a slab panel at least 4 feet by 5 feet and 4 inches thick to demonstrate exposed aggregate slab finish and a similar panel for extra high class slab finish. Each panel must have a full length joint line.

PART 2 PRODUCTS

2.1 DRY SHAKE FLOOR TOPPING MATERIAL

Surface hardener shall be system of integral hardening admixture, shake-on hardener, and surface applied liquid hardener acceptable for both indoor and outdoor applications.

Integral hardening admixture shall be a non-chloride admixture that will produce high strength, durable, hard, non-dusting abrasive resistant concrete. Admixture shall react with the portland cement to produce more complete hydration.

Shake-on hardener shall be a ready to use, heavy-duty emery shake-on floor hardener. Aggregate shall consist of no less than 35% aluminum oxide. Hardener shall produce a hard, non-slip floor that will not rust. Surface applied liquid hardener shall be a water borne chemical hardener and dustproofer. Hardener shall meet local VOC requirements and shall be a solution of silicates and fluosilicates.

PART 3 EXECUTION

3.1 FINISHING FORMED SURFACES

Forms, form materials, and form construction are specified in Section 03 11 13.00 10 STRUCTURAL CAST-IN-PLACE CONCRETE FORMING. Finish formed surfaces as specified herein. Unless another type of architectural or special finish is specified, leave surfaces with the texture imparted by the forms except that defective surfaces must be repaired.

After proper and adequate vibration and tamping, unformed top surfaces of slabs, floors, walls, and curbs shall be brought to a uniform surface with suitable tools. Immediately after the concrete has been screeded, it shall be treated with a liquid evaporation retardant. The retardant shall be used again after each Work operation as necessary to prevent drying shrinkage cracks. The classes of finish for unformed concrete surfaces are designated and defined as follows:

Unformed Surface Finish Schedule	
Area	Finish
Grade slabs and foundations to be covered with concrete or fill material	U1
Floors to be covered with grouted tile or topping grout	U2
Water bearing slabs with slopes 10 percent and less	U3
Water bearing slabs with slopes greater than 10 percent	U4
Slabs not water bearing	U4
Slabs to be covered with built-up roofing	U2
Interior slabs and floors to receive architectural finish	U3
Top surface of walls subject to foot traffic	U4
Top surface of walls not subject to foot traffic	U3
Floors to receive surface hardener	U5

Maintain uniform color of the concrete by use of only one mixture without changes in materials or proportions for any structure or portion of structure that is exposed to view or on which a special finish is required. The form panels used to produce the finish must be orderly in arrangement, with joints between panels planned in approved relation to openings, building corners, and other architectural features. Do not reuse forms if there is any evidence of surface wear or defects that would impair the quality of the surface.

3.2 REPAIRS

Repair in accordance with ACI 301, Section 5.

3.3 FINISHING UNFORMED SURFACES

The finish of all unformed surfaces must meet the requirements of paragraph CONSTRUCTION TOLERANCES in Section 03 31 01.00 10 STRUCTURAL CONCRETE FOR CIVIL WORKS, when tested as specified herein.

3.3.1 General

The ambient temperature of spaces adjacent to unformed surfaces being finished and of the base on which concrete will be placed must not be less than 50 degrees F. In hot weather meet all requirements of Section 03 31 01.00 10 STRUCTURAL CONCRETE FOR CIVIL WORKS. In hot weather when the rate of evaporation of surface moisture, as determined by use of Figure 2.1.5 of ACI 305R, may reasonably be expected to exceed 0.2 pounds per square foot per hour. Make provisions for windbreaks, shading, fog spraying, or wet covering with a light-colored material in advance of placement, and take

such protective measures as quickly as finishing operations will allow. Float finish unformed surfaces that are not to be covered by additional concrete or backfill, with additional finishing as specified below, and true to the elevation indicated. Bring surfaces to receive additional concrete or backfill to the elevation indicated, properly consolidate, and leave true and regular. Unless otherwise indicated, evenly slope exterior surfaces for drainage. Where drains are provided, evenly slope interior floors to the drains. Carefully make joints with a jointing or edging tool. Protect the finished surfaces from stains or abrasions. Grate tampers or "jitterbugs" cannot be used for any surfaces. The dusting of surfaces with dry cement or other materials or the addition of any water during finishing is not be permitted. If bleed water is present prior to finishing, carefully drag off the excess water or remove by absorption with porous materials such as burlap. During finishing operations, take extreme care to prevent over finishing or working water into the surface; this can cause "crazing" (surface shrinkage cracks which appear after hardening) of the surface. Remove and replace any slabs with surfaces which exhibit significant crazing. During finishing operations, check surfaces with a 10 foot straightedge, applied in both directions at regular intervals while the concrete is still plastic, to detect high or low areas.

3.3.2 Rough Slab Finish U1

Sufficient leveling and screening to produce an even, uniform surface with surface irregularities not to exceed 3/8-inch. No further special finish is required.

3.3.3 Finish U2 (Float Finish)

Compact, accurately screed and float to a true uniform surface.

Surfaces shall be floated with wood or metal floats or a finishing machine using float blades. Excessive floating of surfaces while the concrete is plastic and dusting of dry cement and sand on the concrete surface to absorb excess moisture will not be permitted.

Floating shall be the minimum necessary to produce a surface that is free from screed marks and is uniform in texture. Test surface with straightedge and eliminate high and low spots of more than 1/8 inch in ten (10) feet. Surface irregularities shall not exceed 1/4-inch.
Joints and edges shall be tooled where indicated on the drawings.

3.3.4 Trowel Finish U3

Finish surface as in Finish U2 - Float Finish and after the surface has hardened sufficiently to prevent excess of fine material from being drawn to the surface, trowel with steel trowel to obtain a smooth dense finish after concrete has hardened to ring under the trowel.

The finish shall produce a smooth dense uniform surface free of all irregularities, blemishes, ripples, and trowel marks.

3.3.5 Non-Slip Finish U4

Trowel the Finish U3 - Hand-trowel Finish surface to remove local depressions or high points. In addition, the surface shall be given a light

broom finish with brooming perpendicular to drainage unless otherwise indicated.

The resulting surface shall be rough enough to provide a nonskid finish. Exterior walkways shall have an abrasive aggregate applied at a rate of one pound per square foot.

3.3.6 Dry Shake Finish (U5)

Construct areas as indicated with a dry shake finish. Use dry shake floor armoring topping to surface the floor. Construct the base slab and apply the dry shake material in accordance with the manufacturer's written instructions, furnished by the Contractor. Submit manufacturer's written instructions on application of dry shake material 15 days prior to start of construction. Apply the dry shake material in a two-stage application. Total application must be at the rate recommended by the manufacturer but at a rate not less than 1.5 psf.

a. The first application must be at the rate of two-thirds of the total and applied immediately following floating of total area. First apply the dry shake material to the floated concrete adjacent to forms, entryways, columns, and walls where moisture will be lost first. Distribute dry shake material evenly using an approved mechanical spreader. Do not hand throw the material on the surface. Use finishing machines with float shoes as soon as dry shake has absorbed moisture (indicated by darkening of surface); do the floating just sufficiently to bring moisture from base slab through the shake.

b. Immediately following floating of the first shake, apply the remaining one-third of the total specified shake in the same manner and machine float. Further compact the surface by a third mechanical floating if time and setting characteristics will allow. At no time can water be added to the surface.

c. As surface further stiffens, indicated by loss of sheen, hand or mechanically trowel the surface with blades relatively flat. Remove all marks and pinholes in the final raised trowel operation.

d. Cure floors finished with dry shake material using a curing compound recommended by the manufacturer of the dry shake material. Apply membrane curing compound immediately after the floor surface has hardened sufficiently so surface will not be marred by the application. Apply the compound uniformly over the entire surface at a coverage which will provide moisture retention in excess of the requirements of ASTM C309. When dry, protect the coating from droppings of plaster, paint, dirt, and other debris by a covering of scuffproof, non-staining building paper.

e. Keep the floor covered and free of traffic and loads for at least 10 days after completion. Make adequate provision to maintain the concrete temperature at 50 degrees F or above during the curing period. Leave the curing compound in place for not less than 30 days. Remove the curing compound by a manufacturer recommended method prior to turning the facility over to the District.

3.4 EXTERIOR SLAB AND RELATED ITEMS

3.4.1 Pavements

3.4.1.1 Onsite Pavements

For onsite pavements, immediately following the final consolidation of the surface, float the pavement longitudinally from bridges resting on the side forms and spanning but not touching the concrete. If necessary, place and screed additional concrete, and operate the float until a satisfactory surface has been produced. Advance the floating operation not more than half the length of the float and then continued over the new and previously floated surfaces. After finishing is completed but while the concrete is still plastic, eliminate minor irregularities and score marks in the pavement surface by means of long-handled cutting straightedges. Use straightedges that are 12 feet in length and operated from the sides of the pavement and from bridges. Equip a straightedge operated from the side of the pavement with a handle 3 feet longer than one-half the width of the pavement. Test the surface for trueness with a 12 foot straightedge held in successive positions parallel and at right angles to the center line of the pavement, and the whole area covered as necessary to detect variations. Advance the straightedge along the pavement in successive stages of not more than one-half the length of the straightedge. Immediately fill depressions with freshly mixed concrete, strike off, consolidate, and refinish. Also strice and refinish projections above the required elevation. Continue the straightedge testing and finishing until the entire surface of the concrete is true. Before the surface sheen has disappeared and well before the concrete becomes nonplastic, give the surface of the pavement a nonslip sandy surface texture by use of a burlap drag. A strip of clean, wet burlap from 3 to 5 feet wide and 2 feet longer than the pavement width shall be carefully pulled across the surface. Round edges and joints with an edger having a radius of 1/8 inch.

3.4.1.2 Concrete Roadways

For concrete roadways in the public right of way, as the water sheen disappears from the surface of the pavement and just before the concrete achieves its initial set, drag a seamless length of damp burlap that extends the full width of the strip of the constructed pavement, longitudinally along the surface to produce a uniform gritty texture. Use a burlap drag that consists of two layers of medium weight burlap with the trailing edge of the lower layer extending approximately 2 inches behind the upper layer. Support the burlap drag in a manner so that a length of at least 3 feet of burlap is in contact with the pavement.

Except in areas where using hand methods to construct the pavement, support the lead end of the burlap drag by a traveling bridge. Maintain the drag clean and free from encrusted mortar. Replace the burlap with new material as necessary.

After applying the final finish, but before the concrete has become nonplastic, carefully round the edges to a 1/4 inch radius on each side of transverse expansion joints and construction joints and along any structure extending into the pavement. Produce a well-defined and continuous radius, and obtain a smooth, dense mortar finish. Completely remove all concrete from the top of the joint filler.

Check all joints with a straightedge before the concrete has become nonplastic, and, if one side of the joint is higher than the other or the entire joint is higher or lower than the adjacent slabs, make corrections as necessary.

3.4.2 Sidewalks

Apply a lightly broomed finish.

3.4.3 Curbs and Gutters

Finish exposed surfaces using a stiff bristled brush.

3.5 DEFECTIVE SURFACE TREATMENTS

3.5.1 Patching Concrete

Patch all tie holes, honeycombs or other defects with a Portland Cement and sand grout.

Defective surfaces to be repaired shall be cut back from trueline a minimum depth of 1/2-inch over the entire area. Feathered edges will not be permitted. Where chipping or cutting tools are not required in order to deepen the area properly, the surface shall be prepared for bonding by the removal of all laitance or soft material, plus not less than 1/32-inch depth of the surface film from all hard portions by means of an efficient sandblast.

After cutting and sandblasting, the surface shall be wetted sufficiently in advance of shooting with shotcrete or with cement mortar so that while the repair material is being applied, the surfaces underneath will remain moist but not so wet as to overcome the suction upon which a good bond depends.

Holes left by tie-rod cones shall be reamed with suitable toothed reamers so as to leave the surfaces of the holes clean and rough. Holes then shall be repaired in an approved manner with dry-packed cement grout.

Holes left by form-tying devices having a rectangular cross-section and other imperfections having a depth greater than their least surface dimension shall not be reamed but shall be repaired in an approved manner with dry-packed cement grout.

The grout shall not be richer than one (1) part cement and three (3) parts sand with the amount of mixing water enough to produce a workable mix. For exposed walls, the cement shall contain such a proportion of white Portland cement as is required to make the color of the patch match the color of the surrounding concrete. The patch shall be finished in such a manner as to match the adjoining surfaces.

Surfaces of repairs shall receive the same kind and amount of curing treatment as required for the concrete in the repaired section.

-- End of Section --

SECTION 03 39 00.00 10

CONCRETE CURING

PART 1 GENERAL

1.1 REFERENCES

The publications listed below form a part of this specification to the extent referenced. The publications are referred to within the text by the basic designation only.

AMERICAN CONCRETE INSTITUTE INTERNATIONAL (ACI)

ACI 301	(2016) Specifications for Structural Concrete

ASTM INTERNATIONAL (ASTM)

ASTM C156	(2017) Standard Test Method for Water Loss (from a Mortar Specimen) Through Liquid Membrane-Forming Curing Compounds for Concrete
ASTM C171	(2016) Standard Specification for Sheet Materials for Curing Concrete
ASTM C309	(2011) Standard Specification for Liquid Membrane-Forming Compounds for Curing Concrete
ASTM C1602/C1602M	(2012) Standard Specification for Mixing Water Used in Production of Hydraulic Cement Concrete
ASTM D2103	(2015) Standard Specification for Polyethylene Film and Sheeting

1.2 SUBMITTALS

Submit the following in accordance with Section 01 33 00 SUBMITTAL PROCEDURES:

SD-03 Product Data

Curing Materials

Evaporation Retardant

SD-06 Test Reports

Testing and Inspection for CQC

SD-08 Manufacturer's Instructions

Curing Compound

1.3 DELIVERY, STORAGE, AND HANDLING

Store materials in such a manner as to avoid contamination and deterioration. Materials must be capable of being accurately identified after bundles or containers are opened.

PART 2 PRODUCTS

2.1 CURING MATERIALS

Provide curing materials in accordance with ACI 301 Sections 5 and as specified below. Submit product data and manufacturer's instructions for concrete curing compound.

2.1.1 Evaporation Retardant

Water based polymer concentrate that is readily dilutable in water. Submit product data and manufacturer's instructions for Evaporation Retardant.

2.1.1.1 Sheet Membrane for Curing

Polyethylene film:

In accordance with ASTM C171.

Color: White.

Thickness: Nominal thickness of polyethylene film shall not be less than 0.0040 inches when measured in accordance with ASTM D2103. Thickness of polyethylene film at any point shall not be less than 0.0030 inches.

Loss of moisture: Not exceed 0.055 grams per square centimeter of surface when tested in accordance with ASTM C156.

2.1.1.1.1 Sprayed Membrane Curing Compound

Clear type with fugitive dye in accordance with ASTM C309, Type 1D.

2.2 WATER

Provide water for curing that is fresh, clean, potable, and free of injurious amounts of oil, acid, salt, or alkali, except that non-potable water may be used if it meets the requirements of ASTM C1602/C1602M.

PART 3 EXECUTION

3.1 CURING AND PROTECTION

Cure and protect concrete in accordance with ACI 301 Section 5 and as specified below. Cure concrete a minimum of seven days.

3.1.1 Liquid Evaporation Retardant

Under conditions that result in rapid evaporation of moisture from the surface of the concrete, immediately after the concrete has been screeded, coat the surface of the concrete with a liquid evaporation retardant.

Apply the evaporation retardant again after each work operation as necessary to prevent drying shrinkage cracks.

Conditions which result in rapid evaporation of moisture may include one or more of the following:

a. Low humidity.

b. Windy conditions.

c. High temperature.

3.1.2 General Curing

Keep concrete continuously moist and at a temperature of at least 50 degrees Fahrenheit for minimum of 7 days after placement.

Cure concrete to be painted or receive architectural finishes such as tile or carpet with water or sheet membrane.

Do not use sprayed membrane curing or sealing compounds on concrete surfaces that are to receive paint, or receive architectural finishes such as tile or carpet, or upon which any material is to be bonded.

Water cure or sheet membrane cure concrete slabs that are specified to be sealed by concrete sealer.

3.1.3 Moist Curing Alternative

Cure other concrete by water curing or sprayed membrane curing compound at the Contractor's option.

Floor slabs may be cured using sheet membrane curing.

Keep surfaces of concrete being water cured constantly and visibly moist day and night for period of not less than 7 days.

Each day forms remain in place count as 1 day of water curing.

No further curing credit will be allowed for forms in place after contact has once been broken between concrete surface and forms.

Do not loosen form ties during period when concrete is being cured by leaving forms in place.

Moisten top of walls with water with drip type system or other method continuously, and keep concrete surfaces moist at all times during 7 day curing period.

3.1.4 Sprayed Membrane Curing Compound

Apply curing compound to concrete surface after repairing and patching, and within 1 hour after forms are removed.

If more than 1 hour elapses after removal of forms, do not use curing compound, but use water curing for full curing period.

If surface requires repairing or painting, water cure such concrete surfaces.

Do not remove curing compound from concrete in less than 7 days.

Curing compound may be removed only upon written request by Contractor and acceptance by Engineer, stating what measures are to be performed to adequately cure concrete.

Take care to apply curing compound to construction joints. Apply to all surfaces along full profile of joints.

After curing period is complete, remove curing compound placed within construction joint profile by heavy sandblasting prior to placing any new concrete.

Contractor's Option: Instead of using curing compound for curing of construction joints, such joints may be water cured.

Apply curing compound by mechanical, power operated sprayer and mechanical agitator that will uniformly mix all pigment and compound.

Apply curing compound in at least 2 coats. Apply each coat in direction 90 degrees to preceding coat.

Apply curing compound in sufficient quantity so that concrete has uniform appearance and that natural color is effectively and completely concealed at time of spraying.

Continue to coat and recoat surfaces until specified coverage is achieved and until coating film remains on concrete surfaces.

Thickness and coverage of curing compound: Provide curing compound having film thickness that can be scraped from surfaces at any and all points after drying for at least 24 hours.

The Contractor is cautioned that method of applying curing compound specified in this Section may require more curing compound than normally suggested by manufacturer of curing compound and also more than is customary in the trade.

Apply amounts specified in this Section, regardless of manufacturer's recommendations or customary practice.

If the Contractor desires to use curing compound other than specified curing compound, coat sample areas of concrete wall with proposed curing compound and also similar adjacent area with specified compound in specified manner for comparison:

a. If proposed sample is not equal or better, in opinion of the Engineer, in all features, proposed substitution will not be allowed.

b. Prior to final acceptance of the work, remove, by sandblasting or other acceptable method, any curing compound on surfaces exposed to

view, so that only natural color of finished concrete is visible uniformly over entire surface.

3.1.5 Sheet Membrane Curing

Install sheet membrane as soon as concrete is finished and can be walked on without damage.

1. Seal joints and edges with small sand berm.

2. Keep concrete moist under sheet membrane.

3.1.6 Water Cure

Flood area with water. Keep wet or submerged for the curing period. Use sand berms, or other barriers as required. As an alternative, continuous sprinkling may be used.

3.2 TESTING AND INSPECTION FOR CQC

Perform the inspection and tests described below and, based upon the results of these inspections and tests, take the action required. Submit certified copies of laboratory test reports, including curing compound proposed for use on this project.

3.2.1 Moist Curing Inspections

At least once each shift, and not less than twice per day on both work and non-work days, inspect all areas subject to moist curing. Note and record the surface moisture condition.

3.2.2 Moist Curing Corrective Action

When a daily inspection report lists an area of inadequate curing, take immediate corrective action, and extend the required curing period for those areas by 1 day.

3.2.3 Membrane Curing Inspection

Apply no curing compound until the Contractor has verified that the compound is properly mixed and ready for spraying. At the end of each operation, estimate the quantity of compound used by measurement of the container and the area of concrete surface covered, compute the rate of coverage in square feet/gallon, and note whether or not coverage is uniform.

3.2.4 Membrane Curing Corrective Action

When the coverage rate of the curing compound is less than that specified or when the coverage is not uniform, spray the entire surface again.

3.2.5 Sheet Curing Inspection

At least once each shift and once per day on non-work days, inspection all areas being cured using impervious sheets. Note and record the condition of the covering and the tightness of the laps and tapes.

3.2.6 Sheet Curing Corrective Action

When a daily inspection report lists any tears, holes, or laps or joints that are not completely closed, promptly repair the tears and holes or replace the sheets, close the joints, and extend the required curing period for those areas by 1 day.

-- End of Section --

SECTION 03 41 32

STRUCTURAL PRECAST CONCRETE FOR ABOVE-GRADE CONSTRUCTION

PART 1 GENERAL

1.1 SCOPE

A. The Work of this Section consists of furnishing all labor, materials, supplies and equipment necessary for design, construction, delivery, and installation of the structural precast concrete work for the wave wall, including connections, required by the Drawings or as specified herein.

1. Section 03 20 00.00 10 CONCRETE REINFORCEMENT

2. Section 03 31 01.00 10 CAST-IN-PLACE CONCRETE FOR CIVIL WORKS

3. Section 07 92 00 JOINT SEALANTS

1.2 REFERENCES

The following standard specifications shall apply to the Work of this Section:

~~AMERICAN ASSOCIATION OF STATE HIGHWAY AND TRANSPORTATION OFFICIALS (AASHTO)~~

~~AASHTO HB-17~~	~~(2002; Errata 2003; Errata 2005, 17th Edition) Standard Specifications for Highway Bridges~~
~~AASHTO M 85-18~~	~~(2018) Standard Specification for Portland Cement~~

AMERICAN CONCRETE INSTITUTE INTERNATIONAL (ACI)

ACI 308R	(2016) Guide to Curing Concrete
ACI 315-99	Details and Detailing of Concrete Reinforcement
ACI 318	(2014; Errata 1-2 2014; Errata 3-5 2015; Errata 6 2016; Errata 7-9 2017) Building Code Requirements for Structural Concrete (ACI 318-14) and Commentary (ACI 318R-14)
ACI 516	(1965) High Pressure Steam Curing Modern Practice, and Properties of Autoclaved Products
ACI 517	(1970) Recommended Practice for Atmospheric Pressure Steam Curing of Concrete

ASTM INTERNATIONAL (ASTM)

ASTM A193/A193M	(2017) Standard Specification for Alloy-Steel and Stainless Steel Bolting Materials for High-Temperature Service and Other Special Purpose Applications
ASTM A194/A194M	(2017a) Standard Specification for Carbon Steel, Alloy Steel, and Stainless Steel Nuts for Bolts for High-Pressure or High-Temperature Service, or Both
ASTM A496/A496M-07	Standard Specification for Steel Wire, Deformed, for Concrete Reinforcement (Withdrawn 2013)
ASTM A666	(2015) Standard Specification for Annealed or Cold-Worked Austenitic Stainless Steel Sheet, Strip, Plate and Flat Bar
ASTM A706/A706M	(2016) Standard Specification for Low-Alloy Steel Deformed and Plain Bars for Concrete Reinforcement
ASTM C39/C39M	(2018) Standard Test Method for Compressive Strength of Cylindrical Concrete Specimens
ASTM D2240	(2015; E 2017) Standard Test Method for Rubber Property - Durometer Hardness

AMERICAN WELDING SOCIETY (AWS)

AWS A5.4/A5.4M	(2012) Specification for Stainless Steel Electrodes for Shielded Metal Arc Welding
AWS B2.1/B2.1M	(2014; Errata 2015) Specification for Welding Procedure and Performance Qualification
AWS D1.1/D1.1M	(2015; Errata 1 2015; Errata 2 2016) Structural Welding Code - Steel
AWS D1.4/D1.4M	(2011) Structural Welding Code - Reinforcing Steel
AWS D1.6/D1.6M	(2017) Structural Welding Code - Stainless Steel

PRECAST/PRESTRESSED CONCRETE INSTITUTE (PCI)

PCI MNL-116	(1999) Manual for Quality Control for Plants and Production of Structural Precast Concrete Products, 4th Edition
PCI MNL-120	(2010) PCI Design Handbook - Precast and Prestressed Concrete, 6th Edition

PCI MNL-127	Erector's Manual: Standards and Guidelines for the Erection of Precast Concrete Products
PCI MNL-921	R(1977) Manual for Structural Design of Architectural Precast Concrete

FLORIDA DEPARTMENT OF TRANSPORTATION (FDOT)

FDOT 346	Portland Cement Concrete
FDOT 400	Concrete Structures
FDOT 415	Reinforcing for Concrete
FDOT 931	Metal Accessory Materials for Concrete Pavement and Concrete Structures

1.3 DEFINITIONS
~~PORTLAND CEMENT CONCRETE~~

~~DEFINITIONS~~

Not Used

1.4 SUBMITTALS

Submittals shall be in accordance with Section 01 33 00 SUBMITTAL PROCEDURES.

SD-01 Preconstruction Submittals

Qualifications

SD-02 Shop Drawings

Erection Drawings

SD-03 Product Data

Statement giving the nominal maximum aggregate size and proportions of all ingredients

SD-05 Design Data

Production drawings

design calculations

concrete mix designs

SD-06 Test Reports

Copies of test reports including all test data and all test results

~~Laboratory test reports~~

SD-07 Certificates

Certificates

Certification that all precast members are manufactured in accordance with the requirements of PCI MNL-116 and designed per ACI 318

1.5 QUALIFICATIONS

C - Commercial (Structural)

C1 - Precast Concrete Products (non-prestressed)

A. The precast concrete manufacturing plant shall be certified by the Precast/Prestressed Concrete Institute Plant Certification Program. The manufacturer shall be certified at the time of bidding and at the time of product fabrication. Certification shall be in following groups and categories: C1.

B. Precast Erectors shall be regularly engaged for at least 2 years in the erection of precast structural concrete similar to the requirements of this project.

C. Welders shall be qualified in accordance with AWS B2.1/B2.1M.

D. Precast and/or prestressed members shall be produced under plant-controlled conditions conforming to PCI MNL-116.

Submit Qualifications and Certificates as described above prior to commencing work.

1.6 RESPONSIBILITIES

A. It shall be the Contractor's responsibility to assure that all precast concrete conforms to the specified requirements for quality and appearance. The appearance criterion is that all precast architectural finishes provided for this project shall conform in appearance, when viewed from a distance of 20 feet, to the design, color, and texture as represented by the sample. As defined by PCI MNL-116 Appendix C, all surfaces exposed to view shall conform to Finish Grade B and those not exposed shall conform to Standard Grade.

B. Trial mixes and testing to meet requirements of the strengths of concrete specified is the Contractor's responsibility.

C. The Contractor shall provide for erection procedures and induced loads during erection, maintain temporary bracing in place until final support is provided, provide necessary hoisting equipment, and safety and protective devices.

1. Test Results: Tests for compressive strength of concrete shall be performed by an independent commercial testing laboratory. Copies of test reports including all test data and all test results shall be submitted with the concrete mix design.

2. Concrete Mix Design: Prior to commencing operations, including fabrications of the precast for any samples, the Contractor shall submit a statement giving the nominal maximum aggregate size and proportions of all ingredients that will be used in the manufacture of concrete. The statement shall include test results from an approved testing laboratory, certifying that the proportions selected will produce concrete of the properties required. No substitutions shall be made in materials used in the concrete mix without approval and additional tests to verify that the concrete properties are satisfactory. A copy of the concrete mix shall be submitted with each sample.

D. Drawings

1. Erection and Production drawings shall show details in accordance with ACI 315-99 and ACI 318. Drawings shall be sealed by a Florida registered Professional Engineer.

2. Submit Erection Drawings with the following:

   a. Precast unit identification marks, dimensions, and shape of each unit

   b. Plans and/or elevations showing the location of all units in the Work

   c. Sections and details showing connections, openings, inserts, reinforcing, anchoring devices, cast-in items, and their relation to the structure, including fabrication and welding details

   d. Interface with adjacent members

   e. Special handling instructions in sufficient detail to cover manufacture, handling, and erection

   f. Joints and openings between members and between members and structure

   g. Description of all loose, cast-in, and field hardware

   h. Field installed anchor location drawings.

   i. All dead, live and other applicable loads used in the design, and the governing codes.

3. Submit Production drawings with the following

   a. Elevation view of each member

   b. Sections and details to indicate quantities and position of reinforcing steel, anchors, inserts, etc.

   c. Handling devices

   d. Dimensions and finishes

   e. Concrete strengths

f. Estimated cambers

E. Methods for storage and transportation

The Contractor shall divide the submittals into complete separate submittals for each structure. Each submittal shall include design calculations, concrete mix designs, erection drawings, and production drawings. Drawings and calculations shall be stamped and signed by a Professional Engineer registered in the State of Florida.

1.7 CERTIFICATIONS

The Contractor shall submit to the District a certification that all precast members are manufactured in accordance with the requirements of PCI MNL-116 and designed per ACI 318.

1.8 INSPECTIONS

A. Compression tests shall be made for each day's pour of each class of concrete. Not less than three specimens shall be made for each test. Specimens shall be made, cured, and tested in accordance with ASTM C39/C39M. The standard age of tests shall be 28 days, but 7-day tests may be used, provided the relation between the 7- and 28-day strength of the concrete has been established by tests for materials and proportions used. Additional cylinders shall be made to determine strength for transfer of prestress and shall be cured under the same conditions as the concrete to be checked.

B. The Contractor shall verify that building structures, anchors, devices, and openings are ready to receive the precast work.

C. All precast members shall be in place, properly and completely connected and approved before any finishes are applied. Any damaged or defaced units where, in the opinion of the District, suitable and adequate repairs cannot be made will be rejected, whether or not delivered or erected; and whole, replacement units shall be provided at no additional cost to the District.

1.9 WARRANTY

A. The warranty shall meet the requirements specified in Section 01 61 03 EQUIPMENT AND MATERIALS.

PART 2 PRODUCTS

2.1 CONCRETE MATERIALS

A. Concrete: Concrete shall be FDOT Class IV with a minimum 28 day compressive strength of 5,500 psi and shall conform to FDOT 346.

B. Reinforcing Steel: All reinforcing steel shall conform to FDOT 415 and FDOT 931.

2.2 ANCHORS AND INSERTS

A. Connecting and Support Devices: All connection and support devices that are exposed shall conform to ASTM A666, Type 316L stainless steel.

B. Bolts: Bolts that are exposed shall conform to ASTM A193/A193M, Grade B8M (Type 316).

C. Nuts and Washers: Nuts and washers that are exposed shall conform to ASTM A194/A194M, Grade 8M (Type 316).

D. Welded-headed studs shall conform to AWS D1.1/D1.1M, Type B.

E. Deformed bar anchors shall conform to ASTM A496/A496M-07 or ASTM A706/A706M

F. Reglets shall be plastic, shaped and flanged to remain in place once cast; tape closed to prevent concrete intrusion.

G. Weld Filler Metal for Stainless Steel: Stainless steel to stainless steel shall conform to AWS A5.4/A5.4M, Grade 316L filler metal. Stainless steel to carbon steel shall conform to AWS A5.4/A5.4M, Grade 309 filler metal, and 3/32-inch diameter.

H. Primer: Primer shall be Zinc-dust, zinc oxide primer in a phenolic resin spare varnish vehicle, TT P 641 Type III (for galvanized surfaces).

2.3 MISCELLANEOUS MATERIALS

A. Grout shall be per specification Section 03 31 01.00 10 CAST-IN-PLACE STRUCTURAL CONCRETE FOR CIVIL WORKS.

B. Bearing pads shall be chloroprene (Neoprene) molded to size or cut from molded sheet conforming to ASTM D2240, 70-80 Type A durometer.

C. Caulk shall be as specified in Section 07 92 00 JOINT SEALANTS. Caulk shall be tested by the Contractor proved compatible with the surface sealer.

D. Form release agent shall be manufacturer's standard, nonstaining, nonpetroleum based; compatible with concrete surface sealer.

E. Surface sealer shall be clear, flat, penetrating, nonyellowing, nonclouding solution; high concentration of organosilane in an aqueous alcoholic vehicle which is designed to provide water repellent concrete surfaces from which graffiti can be easily removed. Oil-type silicones, paraffins, waxes, vinyls, modified urethanes, or acrylics shall not be used.

2.4 CONCRETE MIX

A. The concrete mix shall be designed by the Contractor and approved by the District. The minimum compressive strength of the structural precast concrete shall not be less than 5500 psi at 28 days.

B. The concrete mix shall be proportioned by weight except water and admixtures may be batched by volume if desired. Design mix shall contain the same materials as those proposed for use in the Work.

2.5 DESIGN REQUIREMENTS

A. The precast member and connection design and construction shall conform to all applicable codes and FDOT 400. Design shall include evaluations of

the effects of connections, holes, discontinuities, concentrated loads, and joints.

B. The precast concrete and connections shown on the drawings represent minimum precast construction requirements. The Contractor shall design the members and connections for all handling, erection, service conditions, and loadings specified herein, and shall provide any additional materials necessary to meet the design conditions.

C. The precast members and connections shall be designed for the following loads in addition to initial handling and erection loads.

D. The design shall be based on a differential temperature of 50 degrees F between interior and exterior faces of the units and an 80 degrees (+40 degrees from erected temperature) average member temperature differential.

E. Stresses due to restrained volume changes caused by shrinkage and temperature differentials shall be included in the design.

F. Minimum Reinforcing:

1. Adequate reinforcing steel shall be provided to control cracking or as indicated on the drawings, whichever is more. Maximum permissible crack width:

   a. Surfaces exposed to weather: 0.005 inch.

   b. Surfaces exposed to view but not weather: 0.01 inch

PART 3 EXECUTION

3.1 FABRICATION

A. Fabrication of members shall be in accordance with the requirements of FDOT 400 except that fabrication criteria listed in this specification shall take precedence if not in agreement with FDOT 400.

B. Forms: Forms shall be steel and constructed to produce precast units uniform in shape, size, and finish, free from castings and dents, gouges, oil canning, or other irregularities that will adversely affect appearance or strength of units. Consistent quality shall be maintained during manufacture. Formwork shall be designed to withstand high-frequency vibration.

C. Embedded items:

1. Reinforcing steel, anchors, inserts, plates, angles, and other cast-in-place items shall be placed and embedded as indicated on shop drawings, accurately positioned in their designed location and anchored to prevent dislocation during member construction. No tack welding of or to reinforcement shall be permitted. Welding, when allowed, shall conform to AWS D1.4/D1.4M requirements. No carbon steel chairs, spacers, nails or tie wire shall be used in positioning reinforcing and embedments.

2. Connecting devices, plates, angles, items fit to steel framing members, inserts, bolts, and accessories shall be fabricated to permit initial placement and final attachment.

3. Flashing reglets shall be placed and embedded continuous and straight. Pickup points, boxouts, and inserts on member faces and surfaces to be exposed are prohibited except as approved.

4. Any product within 1-1/2 inches of the surface is to be non-corrosive, either plastic or 316 stainless steel.

D. Fabrication and Tooling of Stainless Steel Connections and Embedments:

1. Welding of stainless steel shall conform to AWS A5.4/A5.4M, AWS B2.1/B2.1M and AWS D1.6/D1.6M, using tungsten inert gas procedures. Surfaces shall be sanded smooth (do not grind), and oxidized discoloration removed (blue heat tint).

2. Threaded parts of stainless steel bolts shall be lubricated with an antisieze compound per Section **05500 Miscellaneous Metalwork**, every time the nut is run on or off the threads.

3.2 CONVEYING

Concrete shall be conveyed from the mixer to the place of final deposit by methods that will prevent segregation or loss of material.

3.3 PLACING

A. Concrete shall not be dropped more than four (4) feet beyond the bottom of chutes or tremies. Concreting shall be a continuous operation until placement of the section is complete. All concrete shall be worked around reinforcement and embedded items. All forms and subgrade shall be dampened prior to placement and excess water removed.

B. All concrete shall be consolidated in the form by approved high frequency vibration. This vibration may be either internal or external or a combination of both. Where external vibration is used, forms must be of a design adequate to withstand such external vibration without distortion or failure.

3.4 CURING

The concrete shall be cured in accordance with ACI 308R, ACI 517, or ACI 516.

3.5 CONCRETE FINISHES

A. Patching Concrete: Patch all tie holes, honeycombs or other defects with a Portland cement and sand grout. The grout shall not be richer than one (1) part cement and three (3) parts sand with the amount of mixing water enough to produce a workable mix. The patch shall be finished in such a manner as to match the adjoining surfaces. All corrective work shall be performed by experienced personnel skilled in this phase of the work.

B. Defective Concrete: Any concrete which is not formed as shown on the drawings, or does not conform to the contract tolerances, or shows defects

which reduce its structural adequacy, shall be removed from the job by the Contractor at his expense unless the District grants permission to patch the defective area.

C. Exposed or Painted Concrete Surfaces: Surfaces shall be smooth, free of form marks and shall have surface blemishes filled and finished to match adjoining concrete in color and texture. As soon as practicable after stripping, all ridges, ribs and other imperfections shall be rubbed with an abrasive stone. Surfaces to be painted/coated shall be free of any coatings that would interfere with the adhesion or bond of coatings.

D. Concealed Surfaces: Surface shall have all air and rock pockets over 1/4-inch in diameter, and chipped corners patched and cleaned by accepted methods. All form offsets or fins over 1/8-inch shall be ground smooth.

3.6 WELDING

A. Welding for reinforcing steel bars, inserts, anchors, and anchorage details shall be in accordance with AWS D1.4/D1.4M, except that low hydrogen electrodes shall be used for welding of all reinforcing steel. Welding at bends in reinforcing steel shall be avoided.

B. Welding for structural steel shall be in accordance with AWS D1.1/D1.1M

C. All welding shall be performed by AWS certified welders.

3.7 REMOVAL FROM FORMWORK

A. Precast units shall be removed from formwork using procedures conforming to PCI MNL-116. Each precast unit shall be identified with corresponding code on erection drawings, in location not visible to finished work.

3.8 JOINTS

A. Joints shall be as shown on the Drawings and approved Shop Drawings. Joint sealing shall be as specified in Section 07 92 00 JOINT SEALANTS.

3.9 CLEANING

A. Not sooner than 72 hours after joints are sealed, faces and other exposed surfaces of precast units shall be cleaned using a cleaning detergent recommended by the sealer manufacturer and water applied with a stiff bristle brush, and thoroughly rinsed using clean water or other approved procedures.

B. Discoloration, which cannot be removed by these procedures, shall be considered defective work, and repaired or replaced at the option of the District.

3.10 PROTECTION

A. Adjacent surfaces shall be protected from damage during sealing and cleaning operations and against damage, disfiguration or discoloration from subsequent operations. Noncombustible shielding shall be used during welding operations.

3.11 ERECTION

A. The units shall be erected in accordance with approved shop/erection drawings without damage to shape, finish or adjacent work. Damaged members shall be replaced or repaired at the option of the District. Unless otherwise shown, members shall be erected level and plumb within allowable tolerances. Sequence of erection shall be thoroughly outlined prior to starting and any special sequence outlined by the District shall be strictly adhered to.

B. The Contractor shall align and maintain uniform horizontal and vertical joints as erection progresses, provide approved shims and wedges as required, and when members require adjustment beyond design or tolerance criteria, discontinue affected work. Units shall be secured in place and field welds, scratches, and otherwise damaged steel surfaces shall be touched up.

C. Unless flexible connections are provided, prestressed concrete members shall not be permanently connected to the structure until a period of 28 days after transfer of prestress has elapsed.

D. Field fabrication and erection of stainless steel shall conform to the procedures outlined in the paragraph entitled "Fabrication and Tooling of Stainless Steel Connectors and Embedments."

E. Welding of all bearing plates and side connections shall be made carefully and in such a manner as not to spall the adjacent concrete.

F. Vertical units shall be set dry, without grout, attaining joint dimension with plastic shims and spacers.

G. Pickup points, boxouts, inserts and bearing surfaces shown shall be grouted with non-shrink grout in accordance with Section 07 92 00 JOINT SEALANTS. The color and texture of concrete surfaces of adjacent areas shall be finished to match in the same plane.

H. Field-cut alterations will not be permitted unless approved in writing by the precast manufacturer.

I. Bearing surfaces shall be level and free from irregularities.

J. Install according to PCI MNL-120 and PCI MNL-921.

3.12 TRANSPORTATION AND STORAGE

A. During curing, form removal, storage, transportation, and erection, precast members shall not be overstressed, warped, or otherwise damaged or have the camber adversely affected. Members shall be adequately braced and supported during erection to insure proper alignment and structural integrity until permanent connections are completed. Precast units shall be stored off the ground and protected from weather.

B. All prestressed members shall be handled and transported with the supports or pick-up devices located as near as practicable to the location of final supports. Pick-up points shall be shown on shop drawings. Lifting inserts shall have a minimum safety factor of 4. Reusable lifting hardware and rigging shall have a minimum safety factor of 5.

C. Blocking and supports, lateral restraints and protective materials during transport and storage shall be clean, nonstaining, without causing harm to exposed surfaces, including temporary support to prevent bowing and warping. Lateral restraints shall be provided to prevent undesirable horizontal movement. Edges and exposed faces of members shall be protected to prevent straining, chipping, or spalling of concrete.

D. Battens shall separate stacked members across the full width at bearing points.

E. Hardware shall be transported, handled, stored, and protected in wood crates.

3.13 TOLERANCES

A. Manufacturing tolerances shall be in accordance with requirements of PCI MNL-116 unless otherwise indicated.

B. Erection Tolerances shall be in accordance with the requirements of PCI MNL-127, unless indicated otherwise.

-- End of Section --

SECTION 04 20 00

UNIT MASONRY

PART 1 GENERAL

1.1 REFERENCES

The publications listed below form a part of this specification to the extent referenced. The publications are referred to within the text by the basic designation only.

AMERICAN CONCRETE INSTITUTE INTERNATIONAL (ACI)

ACE 350.1(2011) Specification for Masonry Structures

ACI SP-66	(2004) ACI Detailing Manual

ASTM INTERNATIONAL (ASTM)

ASTM A1008/A1008M	(2016) Standard Specification for Steel, Sheet, Cold-Rolled, Carbon, Structural, High-Strength Low-Alloy and High-Strength Low-Alloy with Improved Formability, Solution Hardened, and Bake Hardened
ASTM A1064/A1064M	(2017) Standard Specification for Carbon-Steel Wire and Welded Wire Reinforcement, Plain and Deformed, for Concrete
ASTM A153/A153M	(2016) Standard Specification for Zinc Coating (Hot-Dip) on Iron and Steel Hardware
ASTM A615/A615M	(2016) Standard Specification for Deformed and Plain Carbon-Steel Bars for Concrete Reinforcement
ASTM A641/A641M	(2009a; R 2014) Standard Specification for Zinc-Coated (Galvanized) Carbon Steel Wire
ASTM A653/A653M	(2015; E 2016) Standard Specification for Steel Sheet, Zinc-Coated (Galvanized) or Zinc-Iron Alloy-Coated (Galvannealed) by the Hot-Dip Process
ASTM A951/A951M	(2011) Standard Specification for Steel Wire for Masonry Joint Reinforcement
ASTM C1019	(2014) Standard Test Method for Sampling and Testing Grout
ASTM C1384	(2012a) Standard Specification for Admixtures for Masonry Mortars

ASTM C1611/C1611M	(2014) Standard Test Method for Slump Flow of Self-Consolidating Concrete
ASTM C207	(2006; R 2011) Standard Specification for Hydrated Lime for Masonry Purposes
ASTM C270	(2014a) Standard Specification for Mortar for Unit Masonry
ASTM C476	(2016) Standard Specification for Grout for Masonry
ASTM C494/C494M	(2016) Standard Specification for Chemical Admixtures for Concrete
ASTM C780	(2015a) Preconstruction and Construction Evaluation of Mortars for Plain and Reinforced Unit Masonry
ASTM C90	(2016) Standard Specification for Loadbearing Concrete Masonry Units
ASTM D2000	(2012) Standard Classification System for Rubber Products in Automotive Applications
ASTM D2287	(2012) Nonrigid Vinyl Chloride Polymer and Copolymer Molding and Extrusion Compounds
ASTM E514/E514M	(2014a) Standard Test Method for Water Penetration and Leakage Through Masonry

THE MASONRY SOCIETY (TMS)

TMS MSJC	(2011) Masonry Standard Joint Committee's (MSJC) Book - Building Code Requirements and Specification for Masonry Structures, Containing TMS 402/ACI 530/ASCE 5, TMS 602/ACI 530.1/ASCE 6, and Companion Commentaries

OCCUPATIONAL SAFETY AND HEALTH ADMINISTRATION

29 CFR 1926.706(b)	Requirements for Masonry Construction

1.2 SUBMITTALS

Submit the following in accordance with Section 01 33 00 SUBMITTAL PROCEDURES:

SD-02 Shop Drawings

CMU Drawings

Bar Splice Locations

SD-03 Product Data

Hot Weather Procedures

Cold Weather Procedures

Cement

Mortar Mix Design

Grout Mix Design

Cementitious Materials

SD-04 Samples

Mock-Up Panel

Concrete Masonry Units (CMU)

Admixtures for Masonry Mortar

Anchors, Ties, and Bar Positioners

Joint Reinforcement

SD-05 Design Data

Masonry Compressive Strength

Bracing Calculations

SD-06 Test Reports

Mortar Strength Results

Grout Strength Results

Field Testing of Mortar

Field Testing of Grout

SD-07 Certificates

Concrete Masonry Units (CMU)

Precast Concrete Units

Cementitious Materials

Admixtures for Masonry Mortar

Admixtures for Grout

Anchors, Ties, and Bar Positioners

Joint Reinforcement

Specified Factory Certificates

SD-08 Manufacturer's Instructions

Admixtures for Masonry Mortar

Admixtures for Grout

SD-10 Operation and Maintenance Data

Take-Back Program

1.3 QUALITY REQUIREMENTS

1.3.1 Masonry Mock-Up Panels

1.3.1.1 Mock-Up Panel Location

After material samples are approved and prior to starting masonry work, construct a mock-up panel for each type and color of masonry required. At least 48 hours prior to constructing the panel or panels, submit written notification to the District. Do not build-in mock-up panels as part of the structure; locate mock-up panels where directed. Construct portable mock-up panels or locate in an area where they will not be disrupted during construction.

1.3.1.2 Mock-Up Panel Configuration

Construct mock-up panels L-shaped or otherwise configured to represent all of the wall elements. Construct panels of the size necessary to demonstrate the acceptable level of workmanship for each type of masonry represented on the project. Provide a straight panel or a leg of an L-shaped panel of minimum size 8 feet long by 4 feet high.

1.3.1.3 Mock-Up Panel Composition

Show full color range, texture, and bond pattern of the masonry work. Demonstrate mortar joint tooling; grouting of reinforced vertical cores, collar joints, bond beams, and lintels; positioning, securing, and lapping of reinforcing steel; positioning and lapping of joint reinforcement (including prefabricated corners); and cleaning of masonry work during the construction of the panels. Also include installation or application procedures for anchors, wall ties. When the panel represents reinforced masonry, include a 2 by 2 foot opening placed at least 2 feet above the panel base and 2 feet away from all free edges, corners, and control joints. Provide required reinforcing around this opening as well as at wall corners and control joints.

1.3.1.4 Mock-Up Panel Purpose

The completed panels is used as the standard of workmanship for the type of masonry represented. Do not commence masonry work until the mock-up panel for that type of masonry construction has been completed and approved. Protect panels from the weather and construction operations until the masonry work has been completed and approved. Perform cleaning procedures on the mockup and obtain approval of the District prior to cleaning the building. After completion of the work, completely remove the mock-up panels, including all foundation concrete, from the construction site.

1.4 DELIVERY, STORAGE, AND HANDLING

Deliver, store, handle, and protect material to avoid chipping, breakage, and contact with soil or contaminating material. Store and prepare materials in already disturbed areas to minimize project site disturbance and size of project site.

1.4.1 Masonry Units

Cover and protect masonry units from precipitation. Conform to handling and storage requirements of TMS MSJC.

a. Pack prefaced concrete masonry units in the manufacturer's standard paper cartons, trays, or shrink wrapped pallets with a divider between each unit. Do not stack pallets. Do not remove units from cartons until cartons are placed on scaffolds or in the location where units are to be laid.

b. Mark prefabricated lintels on top sides to show either the lintel schedule number or the number and size of top and bottom bars.

1.4.2 Reinforcement, Anchors, and Ties

Store steel reinforcing bars, coated anchors, ties, and joint reinforcement above the ground. Maintain steel reinforcing bars and uncoated ties free of loose mill scale and loose rust.

1.4.3 Cementitious Materials, Sand and Aggregates

Deliver cementitious and other packaged materials in unopened containers, plainly marked and labeled with manufacturers' names and brands. Store cementitious material in dry, weathertight enclosures or completely cover. Handle cementitious materials in a manner that will prevent the inclusion of foreign materials and damage by water or dampness. Store sand and aggregates in a manner to prevent contamination and segregation.

1.5 PROJECT/SITE CONDITIONS

Conform to TMS MSJC for hot and cold weather masonry erection.

1.5.1 Hot Weather Procedures

When ambient air temperature exceeds 100 degrees F, or exceeds 90 degrees F and the wind velocity is greater than 8 mph, comply with TMS MSJC Article 1.8 D for: preparation prior to conducting masonry work; construction while masonry work is in progress; and protection for newly completed masonry.

1.5.2 Cold Weather Procedures

When ambient temperature is below 40 degrees F, comply with TMS MSJC Article 1.8 C for: preparation prior to conducting masonry work; construction while masonry work is in progress; and protection for newly completed masonry.

1.6 WARRANTY

The warranty shall meet the requirements specified in SECTION 01 61 03 EQUIPMENT AND MATERIALS.

PART 2 PRODUCTS

2.1 SYSTEM DESCRIPTION

2.1.1 Design - Specified Compressive Strength of Masonry

The specified compressive strength of masonry, f'm, is 1,900 psi.

2.1.2 Performance - Verify Masonry Compressive Strength

Verify specified compressive strength of masonry using the "Unit Strength Method" of TMS MSJC. Submit calculations and certifications of unit and mortar strength.

Verify specified compressive strength of masonry using the "Prism Test Method" of TMS MSJC when the "Unit Strength Method" cannot be used. Submit test results.

2.2 MANUFACTURED UNITS

2.2.1 General Requirements

Do not change the source of materials, which will affect the appearance of the finished work, after the work has started except with District's approval. Submit test reports from an approved independent laboratory. Certify test reports on a previously tested material as the same materials as that proposed for use in this project. Submit certificates of compliance stating that the materials meet the specified requirements.

2.2.2 Concrete Masonry Units (CMU)

2.2.2.1 Cement

Use only cement that has a low alkali content and is of one brand.

2.2.2.2 Size

Provide units with specified nominal dimensions of 8 inches wide, 8 inches high, and 16 inches long.

2.2.2.3 Surfaces

Provide units with exposed surfaces that are smooth and of uniform texture.

2.2.2.4 Weather Exposure

Provide concrete masonry units with water-repellant admixture added during manufacture where units will be exposed to dampness such as in kitchens and bathrooms or weather.

The integral water repellent admixture shall be added to the concrete unit masonry at the time of manufacture.

The integral water repellent admixture used for the concrete masonry units and the mortar shall be produced by the same manufacturer.

The manufacturer of the hollow load bearing concrete masonry units shall be a manufacturer that holds a current qualification certification with the selected water repellent admixture manufacturer.

Concrete masonry units with an integral water repellent shall indicate no visible dampness on backs of three wall specimens when tested in accordance with ASTM E514/E514M.

2.2.2.5 Unit Types

a. Hollow Load-Bearing Units: ASTM C90, lightweight. Provide load-bearing units for exterior walls, foundation walls, load-bearing walls, and shear walls.

2.2.2.6 Jamb Units

Provide jamb units of the shapes and sizes to conform with wall units. Solid units may be incorporated in the masonry work where necessary to fill out at corners, gable slopes, and elsewhere as approved.

2.2.3 General-Precast Concrete Units

a. Provide precast concrete trim, lintels, copings, splash blocks and sills that are factory-made units in a plant regularly engaged in producing precast concrete units. Unless otherwise indicated, provide precast concrete with minimum 5,000 psi compressive strength, conforming to Section 03 31 01.00 10 CAST-IN-PLACE CONCRETE using 1/2 inch to No. 4 nominal-size coarse aggregate, and with reinforcement required for handling of the units. Maintain minimum clearance of 3/4 inch between reinforcement and faces of units.

b. Unless precast-concrete items have been subjected during manufacture to saturated-steam pressure of at least 120 psi for at least 5 hours, either damp-cure for 24 hours or steam-cure and then age under cover for 28 days or longer. In precast concrete members weighing over 80 pounds provide built-in loops of galvanized wire or other approved provisions for lifting and anchoring.

c. Fabricate units with beds and joints at right angles to the face, with sharp true arises and with drip grooves on the underside where units overhang walls. Form exposed-to-view surfaces free of surface voids, spalls, cracks, and chipped or broken edges and with uniform appearance and color. Unless otherwise specified, provide units with a smooth dense finish.

d. Submit specified factory certificates.

2.2.4 Precast Concrete Sills and Copings

Cast sills and copings washes. For windows having mullions, cast sills in sections with head joints at mullions and a 1/4 inch allowance for mortar joints. Roughen the ends of sills, except a 3/4 inch wide margin at exposed surfaces, for bond. Provide rounded nosings on treads of door sills. Reinforce sills with not less than two No. 4 bars.

2.3 EQUIPMENT

2.3.1 Vibrators

Maintain at least one spare vibrator on site at all times.

2.3.2 Grout Pumps

Pumping through aluminum tubes is not permitted.

2.4 MATERIALS

2.4.1 Mortar Materials

2.4.1.1 Cementitious Materials

Provide cementitious materials that conform to those permitted by ASTM C270.

2.4.1.2 Hydrated Lime and Alternates

Provide lime that conforms to one of the materials permitted by ASTM C207 for use in combination with portland cement, hydraulic cement, and blended hydraulic cement. Do not use lime in combination with masonry cement or mortar cement.

2.4.1.3 Admixtures for Masonry Mortar

In cold weather, use a non-chloride based accelerating admixture that conforms to ASTM C1384, unless Type III portland cement is used in the mortar.

In showers and kitchens, use mortar that contains a water-repellent admixture that conforms to ASTM C1384. Provide a water-repellent admixture, conforming to ASTM C1384 and of the same brand and manufacturer as the block's integral water-repellent, in the mortar used to place concrete masonry units that have an integral water-repellent admixture.

2.4.1.4 Aggregate and Water

Provide aggregate (sand) and water that conform to materials permitted by ASTM C270.

2.4.1.5 Strength

Mortar shall reach a strength of 2000 psi at 28 days. Submit mix design and compression tests performed according to ASTM C780, Annex A7.

2.4.2 Grout and Ready-Mix Grout Materials

2.4.2.1 Cementitious Materials for Grout

Provide cementitious materials that conform to those permitted by ASTM C476.

2.4.2.2 Admixtures for Grout

Water-reducing admixtures that conform to ASTM C494/C494M Type F or G and viscosity-modifying admixtures that conform to ASTM C494/C494M Type S are permitted for use in grout. Other admixtures require approval by the Contracting Officer.

In cold weather, a non-chloride based accelerating admixture may be used subject to approval by the District; use accelerating admixture that is non-corrosive and conforms to ASTM C494/C494M, Type C.

2.4.2.3 Aggregate and Water

Provide fine and coarse aggregates and water that conform to materials permitted by ASTM C476.

2.5 MORTAR AND GROUT MIXES

2.5.1 Mortar Mix

a. Provide mortar Type N or S unless specified otherwise herein. Do not use masonry cement in the mortar.

b. Use ASTM C270 Type M cement-lime mortar or mortar cement mortar for seismic-force-resisting elements indicated.

c. For field-batched mortar, measure component materials by volume. Use measuring boxes for materials that do not come in packages, such as sand, for consistent batching. Mix cementitious materials and aggregates between 3 and 5 minutes in a mechanical batch mixer with a sufficient amount of water to produce a workable consistency. Do not hand mix mortar unless approved by the Contracting Officer. Maintain workability of mortar by remixing or retempering. Discard mortar that has begun to stiffen or is not used within 2-1/2 hours after initial mixing.

d. For preblended mortar, follow manufacturer's mixing instructions.

2.5.2 Grout and Ready Mix Grout Mix

Use grout that conforms to ASTM C476, coarse. Submit mix design of grout. Use conventional grout with a slump between 8 and 11 inches. Provide minimum grout strength of 2000 psi in 28 days, as tested in accordance with ASTM C1019. Submit grout test results performed in accordance with ASTM C1019. Do not change proportions and do not use materials with different physical or chemical characteristics in grout for the work unless additional evidence is furnished that grout meets the specified requirements. Use ready-mixed grout that conforms to ASTM C476 may be used as an alternative.

2.6 ACCESSORIES

2.6.1 Grout Barriers

Grout barriers for vertical cores that consist of fine mesh wire, fiberglass, or expanded metal.

2.6.2 Anchors, Ties, and Bar Positioners

2.6.2.1 General

a. Fabricate anchors and ties without drips or crimps. Size anchors and ties to provide a minimum of 5/8 inch mortar cover from each face of masonry.

b. Fabricate steel wire anchors and ties shall from wire conforming to ASTM A1064/A1064M and hot-dip galvanize in accordance with ASTM A153/A153M.

c. Fabricate joint reinforcement in conformance with ASTM A951/A951M. Hot dip galvanize joint reinforcement in exterior walls and in interior walls exposed to moist environment in conformance with ASTM A153/A153M. Galvanize joint reinforcement in other interior walls in conformance with ASTM A641/A641M; coordinate with paragraph JOINT REINFORCEMENT below.

d. Fabricate sheet metal anchors and ties in conformance with ASTM A1008/A1008M. Hot dip galvanize sheet metal anchors and ties in exterior walls and in interior walls exposed to moist environment in compliance with ASTM A153/A153M Class B. Galvanize sheet metal anchors and ties in other interior walls in compliance with ASTM A653/A653M, Coating Designation G60.

e. Submit two anchors, ties and bar positioners of each type used, as samples.

2.6.2.2 Dovetail Anchors

Provide dovetail anchors of 3/16 inch diameter steel wire, triangular shaped, and attached to a 12 gauge or heavier steel dovetail section. Use these anchors to connect the exterior masonry wythe as it passes over the face of concrete columns, beams, or walls. Fill cells immediately above and below these anchors unless solid units are used. Furnish dovetail slots, which are specified to be installed by others, in accordance with Section 03 31 01.00 10 CAST-IN-PLACE STRUCTURAL CONCRETE FOR CIVIL WORKS.

2.6.2.3 Bar Positioners

Factory-fabricate bar positioners, used to prevent displacement of reinforcing bars during the course of construction, from 9 gauge steel wire or equivalent, and hot-dip galvanized.

2.6.3 Joint Reinforcement

Factory fabricate joint reinforcement in conformance with ASTM A951/A951M, welded construction. Provide ladder type joint reinforcement as indicated on the drawings, having one longitudinal wire in the mortar bed of each face shell for hollow units and one wire for solid units and with all wires a minimum of 9 gauge. Size joint reinforcement to provide a minimum of 5/8 inch cover from each face. Space crosswires not more than 16 inches. Provide joint reinforcement for straight runs in flat sections not less than 10 feet long. Provide joint reinforcement with factory formed corners and intersections. If approved for use, joint reinforcement may be furnished with adjustable wall tie features. Submit one piece of each type used, including corner and wall intersection pieces, showing at least two cross wires.

2.6.4 Reinforcing Steel Bars

Reinforcing steel bars and rods shall conform to ASTM A615/A615M , Grade 60.

2.6.5 Concrete Masonry Control Joint Keys

Provide control joint keys of a factory fabricated solid section of natural or synthetic rubber (or combination thereof) conforming to ASTM D2000 M2AA-805 with a minimum durometer hardness of 80 or polyvinyl chloride conforming to ASTM D2287 Type PVC 654-4 with a minimum durometer hardness of 85. Form the control joint key with a solid shear section not less than 5/8 inch thick and 3/8 inch thick flanges, with a tolerance of plus or minus 1/16 inch, to fit neatly, but without forcing, in masonry unit jamb sash grooves.

PART 3 EXECUTION

3.1 EXAMINATION

Prior to start of work, verify the applicable conditions as set forth in TMS MSJC, inspection.

3.2 PREPARATION

3.2.1 Stains

Protect exposed surfaces from mortar and other stains. When mortar joints are tooled, remove mortar from exposed surfaces with fiber brushes and wooden paddles. Protect base of walls from splash stains by covering adjacent ground with sand, sawdust, or polyethylene.

3.2.2 Loads

Do not apply uniform loads for at least 12 hours or concentrated loads for at least 72 hours after masonry is constructed. Provide temporary bracing as required.

3.2.3 Concrete Surfaces

Where masonry is to be placed, clean concrete of laitance, dust, dirt, oil, organic matter, or other foreign materials and slightly roughen to provide a surface texture with a depth of at least 1/8 inch. Sandblast, if necessary, to remove laitance from pores and to expose the aggregate.

3.2.4 Shelf Angles

Adjust shelf angles as required to keep the masonry level and at the proper elevation.

3.2.5 Bracing

Provide bracing and scaffolding necessary for masonry work. Design bracing to resist wind pressure as required by OSHA 29 CFR 1926.706(b)and 2017 Florida Building Code and submit bracing calculations, sealed by a registered professional engineer. Do not remove bracing in less than 10 days.

3.3 ERECTION

3.3.1 General

a. Coordinate masonry work with the work of other trades to accommodate built-in items and to avoid cutting and patching. Lay masonry units in running bond pattern. Lay facing courses level with back-up courses, unless the use of adjustable ties has been approved in which case the tolerances is plus or minus 1/2 inch. Adjust each unit to its final position while mortar is still soft and has plastic consistency.

b. Remove and clean units that have been disturbed after the mortar has stiffened, and relay with fresh mortar. Keep air spaces, cavities, chases, expansion joints, and spaces to be grouted free from mortar and other debris. Select units to be used in exposed masonry surfaces from those having the least amount of chipped edges or other imperfections detracting from the appearance of the finished work.

c. When necessary to temporarily discontinue the work, step (rack) back the masonry for joining when work resumes. Toothing may be used only when specifically approved by the District. Before resuming work, remove loose mortar and thoroughly clean the exposed joint. Cover the top of walls subjected to rain or snow with nonstaining waterproof covering or membrane when work is not in process. Extend the covering a minimum of 2 feet down on each side of the wall and hold securely in place.

d. Ensure that units being laid and surfaces to receive units are free of water film and frost. Lay solid units in a nonfurrowed full bed of mortar. Bevel mortar for veneer wythes and slope down toward the cavity side. Shove units into place so that the vertical joints are tight. Completely fill vertical joints between solid units with mortar, except where indicated at control, expansion, and isolation joints. Place hollow units so that mortar extends to the depth of the face shell at heads and beds, unless otherwise indicated. Mortar will be permitted to protrude up to 1/2 inch into the space or cells to be grouted. Provide means to prevent mortar from dropping into the space below or clean grout spaces prior to grouting.

3.3.1.1 Jointing

Tool mortar joints when the mortar is thumbprint hard. Tool horizontal joints after tooling vertical joints. Brush mortar joints to remove loose and excess mortar.

3.3.1.1.1 Tooled Joints

Tool mortar joints in exposed exterior and interior masonry surfaces concave, using a jointer that is slightly larger than the joint width so that complete contact is made along the edges of the unit. Perform tooling so that the mortar is compressed and the joint surface is sealed. Use a jointer of sufficient length to obtain a straight and true mortar joint.

3.3.1.1.2 Flush Joints

Flush cut mortar joints in concealed masonry surfaces and joints at electrical outlet boxes in wet areas. Finish flush cut joints by cutting off the mortar flush with the face of the wall. Point joints in unparged masonry walls below grade tight. For architectural units, such as fluted units, completely fill both the head and bed joints and flush cut.

3.3.1.1.3 Door and Window Frame Joints

On the exposed interior side of exterior frames, joints between frames and abutting masonry walls shall be raked to a depth of 3/8 inch. On the exterior side of exterior frames, joints between frames and abutting masonry walls shall be raked to a depth of 3/8 inch.

3.3.1.1.4 Joint Widths

a. Construct brick masonry with mortar joint widths equal to the difference between the specified and nominal dimensions of the unit, within tolerances permitted by TMS MSJC.

b. Provide 3/8 inch wide mortar joints in concrete masonry, except for prefaced concrete masonry units.

c. Provide 3/8 inch wide mortar joints on unfaced side of prefaced concrete masonry units and not less than 3/16 inch nor more than 1/4 inch wide on prefaced side.

d. Maintain mortar joint widths within tolerances permitted by TMS MSJC

3.3.1.2 Cutting and Fitting

Use full units of the proper size wherever possible, in lieu of cut units. Locate cut units where they would have the least impact on the architectural aesthetic goals of the facility. Perform cutting and fitting, including that required to accommodate the work of others, by masonry mechanics using power masonry saws. Concrete masonry units may be wet or dry cut. Before being placed in the work, dry wet-cut units to the same surface-dry appearance as uncut units being laid in the wall. Provide cut edges that are clean, true and sharp.

a. Carefully make openings in the masonry so that wall plates, cover plates or escutcheons required by the installation will completely conceal the openings and will have bottoms parallel with the masonry bed joints. Provide reinforced masonry lintels above openings over 12 inches wide for pipes, ducts, cable trays, and other wall penetrations, unless steel sleeves are used.

b. Do not reduce masonry units in size by more than one-third in height and one-half in length. Do not locate cut products at ends of walls, corners, and other openings.

3.3.1.3 Unfinished Work

Rack back unfinished work for joining with new work. Toothing may be resorted to only when specifically approved by the District. Remove loose mortar and thoroughly clean the exposed joints before laying new work.

3.3.1.4 Control Joints

Provide control joints in concrete masonry as indicated. If joints are not shown, provide them at a minimum 24'-0" spacing. Construct by using special control-joint units in accordance with the details shown on the Drawings. Form a continuous vertical joint at control joint locations, including through bond beams, by utilizing half blocks in alternating courses on each

side of the joint. Interrupt the control joint key in courses containing continuous bond beam reinforcement. Do not interrupt the horizontal reinforcement and grout at the control joint.

Where mortar was placed in the joint, rake both faces of the control joints to a depth of 3/4 inch. Install backer rod and sealant on both faces in accordance with Section 07 92 00 JOINT SEALANTS.

3.3.2 Partitions

a. Construct partitions continuous from floor to underside of floor or roof deck where shown. Fill openings in firewalls around joists and other structural members as indicated or approved. Where suspended ceilings on both sides of partitions are indicated, the partitions other than those shown to be continuous may be stopped approximately 4 inches above the ceiling level. Construct an isolation joint in the intersection between partitions and structural or exterior walls.

b. Tie interior partitions having 4 inch nominal thickness units to intersecting partitions of 4 inch units, 5 inches into partitions of 6 inch units, and 7 inches into partitions of 8 inch or thicker units. Cells within vertical plane of ties shall be filled solid with grout for full height of partition or solid masonry units may be used. Tie interior partitions over 4 inches thick together with joint reinforcement. Provide joint reinforcement with prefabricated pieces at corners and intersections of partitions.

c. Double-Faced Bases or Partitions: Construct double-faced clay unit bases and partitions of two-unit construction. Bond units by overlapping from opposite faces of the wall, 2 inches for 6 inch thick partitions and 4 inches for 8 inch thick or greater. A single wythe prefaced concrete masonry base or partition may be made with double faced units.

3.3.3 Concrete Masonry Unit Placement

a. Fully bed units used to form piers, pilasters, columns, starting courses on footings, solid foundation walls, lintels, and beams, and where cells are to be filled with grout in mortar under both face shells and webs. Provide mortar beds under both face shells for other units. Mortar head joints for a distance in from the face of the unit not less than the thickness of the face shell.

b. Solidly grout foundation walls below grade.

c. Stiffen double walls at wall-mounted plumbing fixtures by use of strap anchors, two above each fixture and two below each fixture, located to avoid pipe runs, and extending from center to center of each wall within the double wall. Adequately reinforce walls and partitions for support of wall-hung plumbing fixtures when chair carriers are not specified.

d. Submit CMU drawings showing elevations of walls exposed to view and indicating the location of all cut CMU products.

3.3.4 Preparation for Reinforcement

Lay units in such a manner as to preserve the unobstructed vertical continuity of cores to be grouted. Remove mortar protrusions extending 1/2 inch or more into cells before placing grout. Position reinforcing bars accurately as indicated before placing grout. Where vertical reinforcement occurs, fill cores solid with grout in accordance with paragraph PLACING GROUT in this Section.

3.3.5 Anchorage at Intersecting Walls

Provide wire mesh anchors at maximum 16 inches spacing at intersections of interior non-bearing masonry walls.

Anchor structural masonry walls with reinforced bond beams spaced no more than 4'-0" feet on center or as indicated on the drawings.

3.3.6 Lintels

3.3.6.1 Masonry Lintels

Construct masonry lintels with lintel units filled solid with grout in all courses and reinforced with a minimum of two No. 4 bars in the bottom course unless otherwise indicated. Extend lintel reinforcement beyond each side of masonry opening 40 bar diameters or 24 inches, whichever is greater. Support reinforcing bars in place prior to grouting and locate 1/2 inch above the bottom inside surface of the lintel unit.

3.3.6.2 Precast Concrete and Steel Lintels

Provide precast concrete and steel lintels as shown on the Drawings. Set lintels in a full bed of mortar with faces plumb and true. Provide steel and precast lintels with a minimum bearing length of 8 inches unless otherwise indicated. In partially grouted masonry, provide fully grouted units under the full lintel bearing length, unless otherwise indicated.

3.3.7 Sills and Copings

Set sills and copings in a full bed of mortar with faces plumb and true. Slope sills and copings to drain water. Mechanically anchor copings and sills longer than 4 feet as indicated.

3.4 INSTALLATION

3.4.1 Bar Reinforcement Installation

3.4.1.1 Preparation

Submit detail drawings showing bar splice locations. Identify bent bars on a bending diagram and reference and locate such bars on the drawings. Show wall dimensions, bar clearances, and wall openings. Utilize bending details that conform to the requirements of ACI SP-66. No approval will be given to the shop drawings until the Contractor certifies that all openings, including those for mechanical and electrical service, are shown. If, during construction, additional masonry openings are required, resubmit the approved shop drawings with the additional openings shown along with the proposed changes. Clearly highlight location of these additional openings. Provide wall elevation drawings with minimum scale of 1/4 inch per foot. Submit drawings including plans, elevations, and details of wall

reinforcement; details of reinforcing bars at corners and wall intersections; offsets; tops, bottoms, and ends of walls; control and expansion joints; lintels; and wall openings.

Clean reinforcement of loose, flaky rust, scale, grease, mortar, grout, and other coatings that might destroy or reduce its bond prior to placing grout. Do not use bars with kinks or bends not shown on the approved shop drawings. Place reinforcement prior to grouting. Unless otherwise indicated, extend vertical wall reinforcement to within 2 inches of tops of walls.

3.4.1.2 Positioning Bars

a. Accurately place vertical bars within the cells at the positions indicated on the drawings. A minimum clearance of 1/2 inch shall be maintained between the bars and masonry units. Provide minimum clearance between parallel bars of 1/2 inch between the bars and masonry units for coarse grout and a minimum clearance of 1/4 inch between the bars and masonry units for fine grout. Provide minimum clearance between parallel bars of 1 inch or one diameter of the reinforcement, whichever is greater. Vertical reinforcement may be held in place using bar positioners located near the ends of each bar and at intermediate intervals of not more than 192 diameters of the reinforcement or by other means to prevent displacement beyond permitted tolerances. As masonry work progresses, secure vertical reinforcement to prevent displacement beyond allowable tolerances.

b. Wire column and pilaster lateral ties in position around the vertical reinforcing bars. Place lateral ties in contact with the vertical reinforcement and do not place in horizontal mortar bed joints.

c. Position horizontal reinforcing bars as indicated. Stagger splices in adjacent horizontal bars, unless otherwise indicated.

d. Form splices by lapping bars as indicated. Do not cut, bend or eliminate reinforcing bars. Foundation dowel bars may be field-bent when permitted by TMS MSJC.

3.4.1.3 Splices of Bar Reinforcement

Lap splice reinforcing bars as indicated. When used, provide welded or mechanical connections that develop at least 125 percent of the specified yield strength of the reinforcement.

3.4.2 Placing Grout

3.4.2.1 General

Solidly grout hollow masonry units in all walls or partitions.

Discard site-mixed grout that is not placed within 1-1/2 hours after water is first added to the batch or when the specified slump is not met without adding water after initial mixing. Discard ready-mixed grout that does not meet the specified slump without adding water other than water that was added at the time of initial discharge. Allow sufficient time between grout lifts to preclude displacement or cracking of face shells of masonry units. Provide a grout shear key between lifts when grouting is delayed and the lower lift loses plasticity. If blowouts, flowouts, misalignment, or

cracking of face shells should occur during construction, tear down the wall and rebuild.

3.4.2.2 Grout Holes and Cleanouts

3.4.2.2.1 Grout Holes

Provide grouting holes in slabs, spandrel beams, and other in-place overhead construction. Locate holes over vertical reinforcing bars or as required to facilitate grout fill in bond beams. Provide additional openings spaced not more than 16 inches on centers where grouting of hollow unit masonry is indicated. Form such openings not less than 4 inches in diameter or 3 by 4 inches in horizontal dimensions. Upon completion of grouting operations, plug and finish grouting holes to match surrounding surfaces.

3.4.2.2.2 Cleanouts for Hollow Unit Masonry Construction

For hollow masonry units. provide cleanout holes at the bottom of every grout pour in cores containing vertical reinforcement when the height of the grout pour exceeds 5 feet 4 inches. Where all cells are to be grouted, construct cleanout courses using bond beam units in an inverted position to permit cleaning of all cells. Provide cleanout holes at a maximum spacing of 32 inches where all cells are to be filled with grout.

Establish a new series of cleanouts if grouting operations are stopped for more than 4 hours. Provide cleanouts not less than 3 by 3 inch by cutting openings in one face shell. Manufacturer's standard cutout units may be used at the Contractor's option. Do not cleanout holes until masonry work, reinforcement, and final cleaning of the grout spaces have been completed and inspected. For walls which will be exposed to view, close cleanout holes in an approved manner to match surrounding masonry.

3.4.2.3 Grout Placement

A grout pour is the total height of masonry to be grouted prior to erection of additional masonry. A grout lift is an increment of grout placement within a grout pour. A grout pour is filled by one or more lifts of grout.

a. Lay masonry to the top of a pour permitted by TMS MSJC Table 7, based on the size of the grout space and the type of grout. Prior to grouting, remove masonry protrusions that extend 1/2 inch or more into cells or spaces to be grouted. Provide grout holes and cleanouts in accordance with paragraph GROUT HOLES AND CLEANOUTS above when the grout pour height exceeds 5 feet 4 inches. Hold reinforcement, bolts, and embedded connections rigidly in position before grouting is started. Do not prewet concrete masonry units.

b. Place grout using a hand bucket, concrete hopper, or grout pump to fill the grout space without segregation of aggregate. Operate grout pumps to produce a continuous stream of grout without air pockets, segregation, or contamination.

c. If the masonry has cured at least 4 hours, grout slump is maintained between 10 to 11 inches, and no intermediate reinforced bond beams are placed between the top and bottom of the pour height, place conventional grout in lifts not exceeding 12 feet 8 inches. For the same curing and slump conditions but with intermediate bond beams,

limit conventional grout lift to the bottom of the lowest bond beam that is more than 5 feet 4 inches above the bottom of the lift, but do not exceed 12 feet 8 inches. If masonry has not cured at least 4 hours or grout slump is not maintained between 10 to 11 inches, place conventional grout in lifts not exceeding 5 feet 4 inches.

d. Consolidate conventional grout lift and reconsolidate after initial settlement before placing next lift. For grout pours that are 12 inches or less in height, consolidate and reconsolidate grout by mechanical vibration or puddling. For grout pours that are greater than 12 inches in height, consolidate and reconsolidate grout by mechanical vibration. Apply vibrators at uniformly spaced points not further apart than the visible effectiveness of the machine. Limit duration of vibration to time necessary to produce satisfactory consolidation without causing segregation. If previous lift is not permitted to set, dip vibrator into previous lift. Do not insert vibrators into lower lifts that are in a semi-solidified state. If lower lift sets prior to placement of subsequent lift, form a grout key by terminating grout a minimum of 1-1/2 inch below a mortar joint. Vibrate each vertical cell containing reinforcement in partially grouted masonry. Do not form grout keys within beams.

e. If the masonry has cured 4 hours, place self-consolidating grout (SCG) in lifts not exceeding the pour height. If masonry has not cured for at least 4 hours, place SCG in lifts not exceeding 5 feet 4 inches. Do not mechanically consolidate self-consolidating grout. Place self-consolidating grout in accordance with manufacturer's recommendations.

f. Upon completion of each day's grouting, remove waste materials and debris from the equipment, and dispose of outside the masonry.

3.4.3 Joint Reinforcement Installation

Install joint reinforcement at 16 inches on center unless otherwise indicated. Lap joint reinforcement not less than 6 inches. Install prefabricated sections at corners and wall intersections. Place the longitudinal wires of joint reinforcement in mortar beds to provide not less than 5/8 inch cover to either face of the unit.

3.4.4 Bond Beams

Reinforce and grout bond beams as indicated and as described in paragraphs above. Install grout barriers under bond beam units to retain the grout as required, unless wall is fully grouted or solid bottom units are used. For high lift grouting in partially grouted masonry, provide grout retaining material on the top of bond beams to prevent upward flow of grout. Ensure that reinforcement is continuous, including around corners, except through control joints or expansion joints, unless otherwise indicated.

3.5 APPLICATION

3.5.1 Built-In Items

Fill spaces around built-in items with mortar. Point openings around flush-mount electrical outlet boxes in wet locations with mortar. Embed anchors, ties, wall plugs, accessories, flashing, pipe sleeves and other items required to be built-in as the masonry work progresses. Fully embed

anchors, ties and joint reinforcement in the mortar. Fill cells receiving anchor bolts and cells of the first course below bearing plates with grout, unless otherwise indicated.

3.5.2 Door and Window Frame Joints

On the exposed interior and exterior sides of exterior frames, rake joints between frames and abutting masonry walls to a depth of 3/8 inch.

3.5.3 Bearing Plates

Set bearing plates for beams, joists, joist girders and similar structural members to the proper line and elevation with damp-pack bedding mortar, except where non-shrink grout is indicated. Provide bedding mortar and non-shrink grout as specified in Section 03 31 01.00 10 CAST-IN-PLACE STRUCTURAL CONCRETE FOR CIVIL WORKS.

3.5.4 Tolerances

Lay masonry plumb, true to line, with courses level within the tolerances of TMS MSJC, Article 3.3 F.

3.6 FIELD QUALITY CONTROL

3.6.1 Tests

3.6.1.1 Field Testing of Mortar

Perform mortar testing at the following frequency: one time per day. For each required mortar test, provide a minimum of three mortar samples. Perform initial mortar testing prior to construction for comparison purposes during construction.

Prepare and test mortar samples for mortar aggregate ratio in accordance with ASTM C780 Annex A7.

3.6.1.2 Field Testing of Grout

a. Perform grout testing at the following frequency: one time per day. For each required grout property to be evaluated, provide a minimum of three specimens.

b. Sample and test conventional and self-consolidating grout for compressive strength and temperature in accordance with ASTM C1019.

c. Evaluate slump in conventional grout in accordance with ASTM C1019.

d. Evaluate slump flow and visual stability index of self-consolidating grout in accordance with ASTM C1611/C1611M.

3.7 POINTING AND CLEANING

After mortar joints have attained their initial set, but prior to hardening, completely remove mortar and grout daubs and splashings from masonry-unit surfaces that will be exposed or painted. Before completion of the work, rake out defects in joints of masonry to be exposed or painted, fill with mortar, and tool to match existing joints. Immediately after grout work is

completed, remove scum and stains that have percolated through the masonry work using a low pressure stream of water and a stiff bristled brush. Do not clean masonry surfaces, other than removing excess surface mortar, until mortar in joints has hardened. Leave masonry surfaces clean, free of mortar daubs, dirt, stain, and discoloration, including scum from cleaning operations, and with tight mortar joints throughout. Do not use metal tools and metal brushes for cleaning.

3.7.1 Dry-Brushing Concrete Masonry

Dry brush exposed concrete masonry surfaces at the end of each day's work and after any required pointing, using stiff-fiber bristled brushes.

3.8 CLOSE-OUT TAKE-BACK PROGRAM

Collect information from manufacturer for take-back program options. Set aside masonry units, full and partial to be returned to manufacturer for recycling into new product. When such a service is not available, seek local recyclers to reclaim the materials. Submit documentation that includes contact information, summary of procedures, and the limitations and conditions applicable to the project. Indicate manufacturer's commitment to reclaim materials for recycling and/or reuse.

3.9 PROTECTION

Protect facing materials against staining. Cover top of walls with non-staining waterproof covering or membrane to protect from moisture intrusion when work is not in progress. Continue covering the top of the unfinished walls until the wall is waterproofed with a complete roof or parapet system. Extend covering a minimum of 2 feet down on each side of the wall and hold securely in place. Before starting or resuming work, clean top surface of masonry in place of loose mortar and foreign material.

-- End of Section --

SECTION 05 05 23.16

STRUCTURAL WELDING

PART 1 GENERAL

1.1 REFERENCES

The publications listed below form a part of this specification to the extent referenced. The publications are referred to within the text by the basic designation only.

AMERICAN INSTITUTE OF STEEL CONSTRUCTION (AISC)

AISC 360	(2010) Specification for Structural Steel Buildings

AMERICAN SOCIETY FOR NONDESTRUCTIVE TESTING (ASNT)

ANSI/ASNT CP-189 (2016) ASNT Standard for Qualification and Certification of Nondestructive Testing Personnel (ANSI/ASNT CP-105-2006)

AMERICAN WELDING SOCIETY (AWS)

AWS A2.4	(2012) Standard Symbols for Welding, Brazing and Nondestructive Examination
AWS D1.1/D1.1M	(2015; Errata 1 2015; Errata 2 2016) Structural Welding Code - Steel
AWS D1.3/D1.3M	(2008; Errata 2008) Structural Welding Code - Sheet Steel
AWS D1.4/D1.4M	(2011) Structural Welding Code - Reinforcing Steel
AWS D1.8/D1.8M	(2009) Structural Welding Code—Seismic Supplement
AWS D14.4/D14.4M	(2012) Specification for Welded Joints for Machinery and Equipment
AWS Z49.1	(2012) Safety in Welding and Cutting and Allied Processes

AMERICAN SOCIETY OF MECHANICAL ENGINEERS (ASME)

ASME B16.25	Buttwelding Ends
ASME B31.1	Standards for Power Piping

ASTM INTERNATIONAL (ASTM)

ASTM E165/E165M	(2012) Standard Practice for Liquid Penetrant Examination for General Industry
ASTM E709	(2015) Standard Guide for Magnetic Particle Examination

AMERICAN WATER WORKS ASSOCIATION (AWWA) / AMERICAN NATIONAL STANDARDS INSTITUTE (ANSI)

AWWA C206	(2017) Field Welding of Steel Water Pipe
AWWA C207	(2018) Standard for Steel Pipe Flanges for Waterworks Service, Sizes 4 in. through 144 in. (100 mm through 3600 mm)

1.2 SUBMITTALS

Submit the following in accordance with Section 01 33 00 SUBMITTAL PROCEDURES:

SD-01 Preconstruction Submittals

Welding Quality Assurance Plan

SD-03 Product Data

Welding Procedure Qualifications;

Welder, Welding Operator, and Tacker Qualification

Previous Qualifications

Pre-Qualified Procedures

Welding Electrodes and Rods

SD-06 Test Reports

Nondestructive Testing

SD-07 Certificates

Certified Welding Procedure Specifications (WPS)

Certified Brazing Procedure Specifications (BPS)

Certified Procedure Qualification Records (PQR)

Certified Welder Performance Qualifications (WPQ)

Certified Brazer Performance Qualifications (BPQ)

1.3 QUALITY REQUIREMENTS

Except for pre-qualified (in accordance with AWS D1.1/D1.1M) and previously qualified procedures, each Contractor performing welding must record in detail and qualify the welding procedure specification for any welding procedure followed in the fabrication of weldments. Conform welding procedure qualifications to AWS D1.1/D1.1M and to the specifications in this section. Submit for approval copies of the welding procedure specification and the results of the procedure qualification test records for each type of welding which requires procedure qualification and the welder, welding operator, or tacker qualification test records. Approval of any procedure, however, does not relieve the Contractor of the sole responsibility for producing a finished structure meeting all the specified requirements. Submit this information on the forms in Annex M of AWS D1.1/D1.1M. Individually identify and clearly reference on the detail drawings and erection drawings all welding procedure specifications, or suitably key them to the contract drawings. In case of conflict between this specification and AWS D1.1/D1.1M, this specification governs.

1.3.1 General Requirements

Fabricate work in an AISC Certified Fabrication Plant. Work must be erected by an AISC Certified Erector, Category.

a. For Structural Projects, provide documentation of the following:

(1) Component Thickness 1/8 inch and greater: Qualification documents (WPS, PQR, and WPQ) in accordance with AWS D1.1/D1.1M and AWS D1.8/D1.8M.

(2) Component Thickness Less than 1/8 inch: Qualification documents (WPS, PQR, and WPQ) in accordance with AWS D1.3/D1.3M.

(3) Reinforcing Steel: Qualification documents (WPS, PWR, and WPQ) in accordance with AWS D1.4/D1.4M.

b. For other applications, provide documentation of the following:

(1) Submit two copies of the Certified Welding Procedure Specifications (WPS), Certified Brazing Procedure Specifications (BPS) and Certified Procedure Qualification Records (PQR) to the District for approval review.

(2) Submit two copies of the Certified Welder Performance Qualifications (WPQ) and Certified Brazer Performance Qualifications (BPQ) to the District for review within fifteen calendar days prior to any employee welding on the project material.

(3) Machinery: Qualification documents (WPS, PQR, and WPQ) in accordance with AWS D14.4/D14.4M.

1.3.2 Previous Qualifications

Welding procedures previously qualified by test may be accepted for this contract without re-qualification, upon receipt of the test results, if the following conditions are met:

a. Testing was performed by an approved testing laboratory, technical consultant, or the Contractor's approved quality organization.

b. The qualified welding procedure conforms to the requirements of this specification and is applicable to welding conditions encountered under this contract.

c. The welder, welding operator, and tacker qualification tests conform to the requirements of this specification and are applicable to welding conditions encountered under this contract.

1.3.3 Pre-qualified Procedures

Welding procedures which are considered pre-qualified as specified in AWS D1.1/D1.1M will be accepted without further qualification. Submit for approval a listing or an annotated drawing to indicate the joints not pre-qualified. Procedure qualification is mandatory for these joints.

1.3.4 Retests

If welding procedure fails to meet the requirements of AWS D1.1/D1.1M, revise and re-qualify the procedure specification, or at the Contractor's option, welding procedure may be retested in accordance with AWS D1.1/D1.1M. If the welding procedure is qualified through retesting, submit all test results, including those of test welds that failed to meet the requirements, with the welding procedure.

1.3.5 Welder, Welding Operator, and Tacker Qualification

Each welder, welding operator, and tacker assigned to work on this contract must be qualified in accordance with the applicable requirements of AWS D1.1/D1.1M and as specified in this section. Welders, welding operators, and tackers who make acceptable procedure qualification test welds will be considered qualified for the welding procedure used.

1.3.5.1 Previous Personnel Qualifications

At the discretion of the District, welders, welding operators, and tackers qualified by test within the previous 6 months may be accepted for this contract without re-qualification if all the following conditions are met:

a. Copies of the welding procedure specifications, the procedure qualification test records, and the welder, welding operator, and tacker qualification test records are submitted and approved in accordance with the specified requirements for detail drawings.

b. Testing was performed by an approved testing laboratory, technical consultant, or the Contractor's approved quality control organization.

c. The previously qualified welding procedure conforms to the requirements of this specification and is applicable to welding conditions encountered under this contract.

d. The welder, welding operator, and tacker qualification tests conform to the requirements of this specification and are applicable to welding conditions encountered under this contract.

1.3.5.2 Certificates

Before assigning any welder, welding operator, or tacker to work under this contract, submit the names of the welders, welding operators, and tackers to be employed, and certification that each individual is qualified as specified. State in the certification the type of welding and positions for which the welder, welding operator, or tacker is qualified, the code and procedure under which the individual is qualified, the date qualified, and the name of the firm and person certifying the qualification tests. Keep the certification current, on file, and furnish 3 copies.

1.3.5.3 Renewal of Qualification

Re-qualification of a welder or welding operator is required under any of the following conditions:

a. It has been more than 6 months since the welder or welding operator has used the specific welding process for which he is qualified.

b. There is specific reason to question the welder or welding operator's ability to make welds that meet the requirements of these specifications.

c. The welder or welding operator was qualified by an employer other than those firms performing work under this contract, and a qualification test has not been taken within the past 12 months. Submit as evidence of conformance all records showing periods of employment, name of employer where welder, or welding operator, was last employed, and the process for which qualified.

d. A tacker who passes the qualification test is considered eligible to perform tack welding indefinitely in the positions and with the processes for which he/she is qualified, unless there is some specific reason to question the tacker's ability. In such a case, the tacker is required to pass the prescribed tack welding test.

1.3.6 Symbols and Safety

Use symbols in accordance with AWS A2.4, unless otherwise indicated. Follow safe welding practices and safety precautions during welding in conformance with AWS Z49.1.

PART 2 PRODUCTS

2.1 SYSTEM DESCRIPTION

Conform the design of welded connections to AISC 360, unless otherwise indicated or specified. Material with welds will not be accepted unless the welding is specified or indicated on the drawings or otherwise approved.

Perform welding as specified in this section, except where additional requirements are shown on the drawings or are specified in other sections. Do not commence welding until welding procedures, inspectors, nondestructive testing personnel, welders, welding operators, and tackers have been qualified and the submittals approved by the District. Perform all testing at or near the work site. Maintain records of the test results obtained in welding procedure, welder, welding operator, and tacker performance qualifications.

2.1.1 Pre-erection Conference

Hold a pre-erection conference prior to the start of the field welding, to bring all affected parties together and to gain a naturally clear understanding of the project and the Welding Procedure Specifications (WPS) (submitted for all welding, including welding done using pre-qualified procedures). Mandatory attendance is required by all Contractor's welding production and inspection personnel and appropriate District personnel. Include as items for discussion: responsibilities of various parties; welding procedures and processes to be followed; welding sequence (both within a joint and joint sequence within the building); inspection requirements and procedures, both visual and nondestructive testing; welding schedule; and other items deemed necessary by the attendees.

2.2 WELDING EQUIPMENT AND MATERIALS

Provide all welding equipment, welding electrodes and rods, welding wire, and fluxes capable of producing satisfactory welds when used by a qualified welder or welding operator performing qualified welding procedures. Provide welding equipment and materials that comply with the applicable requirements of AWS D1.1/D1.1M. Submit product data on welding electrodes and rods.

2.3 PIPE WELDS

2.3.1 Welded Joints

Welded joints shall be shop-fabricated in accordance with the standards and specifications contained herein.

a. Field welding will be permitted for black carbon steel pipe where it can be demonstrated that the interior of the pipe can be satisfactorily lined and inspected. Welding in the field shall be performed only when requested on the Shop Drawings and accepted by the DISTRICT in writing as specified herein.

b. All welding shall be performed using the shielding metallic arc process in accordance with ANSI/ASME B31.1 and AWWA C206 except as modified or supplemented herein. All welders shall be AWS certified in accordance with AWWA C206, and ANSI/ASME B31.1 requirements.

c. Pipe and fittings with wall thickness of 3/16-inch and larger shall have ends beveled for welding. Shop and field bevels shall be machine cut; manual flame cutting without machine guide shall not be permitted. Bevels shall be 30 degrees with a maximum of 37 degrees. The abutting pipe ends shall be separated before welding to permit complete fusion to the inside wall of the pipe without overlapping. Welding shall be continuous around the joint and shall be completed without interruption. Welds shall be of the single vee butt type, of sound

weld metal thoroughly fused into the ends of the pipe and into the bottom of the vee. Welds shall be free from cold spots, pinholes, oxide inclusion, burrs, snags, rough projections or other defects.

d. Butt welding end preparation on all pipes shall conform to ASME B16.25 "Buttwelding Ends".

e. Filler metal for welding shall be of the same composition as the base metal. All welding of steel pipe flanges shall be in accordance with requirements of AWWA C207 and ANSI/ASME B31.1.

f. Field welds shall be "fixed position" type.

g. All field welds shall be radiographically inspected by the Contractor if so ordered by the District.

PART 3 EXECUTION

3.1 WELDING OPERATIONS

3.1.1 Requirements

Conform workmanship and techniques for welded construction to the requirements of AWS D1.1/D1.1M and AISC 360. When AWS D1.1/D1.1M and the AISC 360 specification conflict, the requirements of AWS D1.1/D1.1M govern.

3.1.2 Identification

Identify all welds in one of the following ways:

a. Submit written records to indicate the location of welds made by each welder, welding operator, or tacker.

b. Identify all work performed by each welder, welding operator, or tacker with an assigned number, letter, or symbol to identify welds made by that individual. The District may require welders, welding operators, and tackers to apply their symbol next to the weld by means of rubber stamp, felt-tipped marker with waterproof ink, or other methods that do not cause an indentation in the metal. Place the identification mark for seam welds adjacent to the weld at 3 foot intervals. Identification with die stamps or electric etchers is not allowed.

3.1.3 Welded Pipe Joints

a. Weld pipe joints in accordance with ASME Code for Pressure Piping.

b. Install forged branch-connection fittings wherever branch pipe is indicated or install regular "T" fitting unless indicated otherwise.

c. Clean each joint before welding into the system, to remove loose debris.

d. Align pipe joints with clamps prior to welding. Clamps or other alignment devices shall not reduce the internal pipe diameter.

e..Defective welds shall be repaired in accordance with ANSI B31.1.

3.2 QUALITY CONTROL

Perform testing using an approved inspection or testing laboratory or technical consultant; or if approved, the Contractor's inspection and testing personnel may be used instead of the commercial inspection or testing laboratory or technical consultant. Perform visual and ultrasonic, magnetic particle, and liquid penetrant dye penetrant inspections to determine conformance with paragraph STANDARDS OF ACCEPTANCE. Conform procedures and techniques for inspection with applicable requirements of AWS D1.1/D1.1M, ASTM E165/E165M, and ASTM E709. Submit a Welding Quality Assurance Plan and records of tests and inspections.

3.3 STANDARDS OF ACCEPTANCE

Conform dimensional tolerances for welded construction, details of welds, and quality of welds with the applicable requirements of AWS D1.1/D1.1M and the contract drawings. Perform nondestructive testing by visual inspection and ultrasonic, magnetic particle, or dye penetrant methods. The minimum extent of nondestructive testing must be random 25 percent of welds or joints, as indicated on the drawings. Submit all records of nondestructive testing.

3.3.1 Nondestructive Testing

The welding is subject to inspection and tests in the mill, shop, and field. Inspection and tests in the mill or shop do not relieve the Contractor of the responsibility to furnish weldments of satisfactory quality. When materials or workmanship do not conform to the specification requirements, the District reserves the right to reject material or workmanship or both at any time before final acceptance of the structure containing the weldment. Any indication of a defect is regarded as a defect, unless re-evaluation by nondestructive methods or by surface conditioning shows that no unacceptable defect is present. Submit all records of nondestructive testing in accordance with paragraph STANDARDS OF ACCEPTANCE.

3.3.2 Destructive Tests

Make all repairs when metallographic specimens are removed from any part of a structure. Employ only qualified welders or welding operators, and use the proper joints and welding procedures, including peening or heat treatment if required, to develop the full strength of the members and joints cut and to relieve residual stress.

3.4 DISTRICT INSPECTION AND TESTING

In addition to the inspection and tests performed by the Contractor for quality control, the District will perform inspection and testing for acceptance to the extent determined by the District. The costs of such inspection and testing will be borne by the Contractor if unsatisfactory welds are discovered, or by the District if the welds are satisfactory. The work may be performed by the District's own forces or under a separate contract for inspection and testing. The District reserves the right to perform supplemental nondestructive and destructive tests to determine compliance with paragraph STANDARDS OF ACCEPTANCE.

3.5 CORRECTIONS AND REPAIRS

If inspection or testing indicates defects in the weld joints, repair defective welds using a qualified welder or welding operator as applicable. Conduct corrections in accordance with the requirements of AWS D1.1/D1.1M and the specifications. Repair all defects in accordance with the approved procedures. Repair defects discovered between passes before additional weld material is deposited. Wherever a defect is removed and repair by welding is not required, blend the affected area into the surrounding surface to eliminate sharp notches, crevices, or corners. After a defect is thought to have been removed, and before re-welding, examine the area by suitable methods to ensure that the defect has been eliminated. Repaired welds must meet the inspection requirements for the original welds.

-- End of Section --

SECTION 05 12 00

STRUCTURAL STEEL

PART 1 GENERAL

1.1 REFERENCES

The publications listed below form a part of this specification to the extent referenced. The publications are referred to within the text by the basic designation only.

AMERICAN INSTITUTE OF STEEL CONSTRUCTION (AISC)

AISC 201	(2006) AISC Certification Program for Structural Steel Fabricators
AISC 303	(2010) Code of Standard Practice for Steel Buildings and Bridges
AISC 325	(2011) Steel Construction Manual
AISC 326	(2009) Detailing for Steel Construction
AISC 341	(2012) Seismic Provisions for Structural Steel Buildings
AISC 360	(2010) Specification for Structural Steel Buildings
AISC DESIGN GUIDE 10	(1997) Erection Bracing of Low-Rise Structural Steel Buildings

AMERICAN WELDING SOCIETY (AWS)

AWS A2.4	(2012) Standard Symbols for Welding, Brazing and Nondestructive Examination
AWS D1.1/D1.1M	(2015; Errata 1 2015; Errata 2 2016) Structural Welding Code - Steel

ASME INTERNATIONAL (ASME)

ASME B46.1	(2009) Surface Texture, Surface Roughness, Waviness and Lay

ASTM INTERNATIONAL (ASTM)

ASTM A123/A123M	(2013) Standard Specification for Zinc (Hot-Dip Galvanized) Coatings on Iron and Steel Products
ASTM A276/A276M	(2016a) Standard Specification for Stainless Steel Bars and Shapes

ASTM A29/A29M	(2013) Standard Specification for General Requirements for Steel Bars, Carbon and Alloy, Hot-Wrought
ASTM A307	(2014) Standard Specification for Carbon Steel Bolts and Studs, 60 000 PSI Tensile Strength
ASTM A325	(2014) Standard Specification for Structural Bolts, Steel, Heat Treated, 120/105 ksi Minimum Tensile Strength
ASTM A36/A36M	(2014) Standard Specification for Carbon Structural Steel
ASTM A490	(2014a) Standard Specification for Structural Bolts, Alloy Steel, Heat Treated, 150 ksi Minimum Tensile Strength
ASTM A500/A500M	(2013) Standard Specification for Cold-Formed Welded and Seamless Carbon Steel Structural Tubing in Rounds and Shapes
ASTM A53/A53M	(2012) Standard Specification for Pipe, Steel, Black and Hot-Dipped, Zinc-Coated, Welded and Seamless
ASTM A563	(2015) Standard Specification for Carbon and Alloy Steel Nuts
ASTM A563M	(2007; R 2013) Standard Specification for Carbon and Alloy Steel Nuts (Metric)
ASTM A6/A6M	(2016) Standard Specification for General Requirements for Rolled Structural Steel Bars, Plates, Shapes, and Sheet Piling
ASTM A722/A722M	(2015) Standard Specification for High-Strength Steel Bars for Prestressed Concrete
ASTM A780/A780M	(2009; R 2015) Standard Practice for Repair of Damaged and Uncoated Areas of Hot-Dip Galvanized Coatings
ASTM A992/A992M	(2011) Standard Specification for Structural Steel Shapes
ASTM C1107/C1107M	(2014a) Standard Specification for Packaged Dry, Hydraulic-Cement Grout (Nonshrink)
ASTM C827/C827M	(2016) Standard Test Method for Change in Height at Early Ages of Cylindrical Specimens of Cementitious Mixtures
ASTM F1554	(2015; E 2016; E 2017) Standard Specification for Anchor Bolts, Steel, 36, 55, and 105-ksi Yield Strength

ASTM F436	(2011) Hardened Steel Washers
ASTM F2329	(2013) Zinc Coating, Hot-Dip, Requirements for Application to Carbon and Alloy Steel Bolts, Screws, Washers, Nuts, and Special Threaded Fasteners
ASTM F844	(2007a; R 2013) Washers, Steel, Plain (Flat), Unhardened for General Use
ASTM F959	(2013) Compressible-Washer-Type Direct Tension Indicators for Use with Structural Fasteners

SOCIETY FOR PROTECTIVE COATINGS (SSPC)

SSPC PA 1	(2000; E 2004) Shop, Field, and Maintenance Painting of Steel
SSPC Paint 20	(2002; E 2004) Zinc-Rich Primers (Type I, Inorganic, and Type II, Organic)
SSPC Paint 29	(2002; E 2004) Zinc Dust Sacrificial Primer, Performance-Based
SSPC SP 3	(1982; E 2004) Power Tool Cleaning
SSPC SP 6/NACE No.3	(2007) Commercial Blast Cleaning

U.S. DEPARTMENT OF DEFENSE (DOD)

UFC 3-301-01	(2013; with Change 1) Structural Engineering
UFC 3-310-04	(2013) Seismic Design for Buildings

1.2 SUBMITTALS

Submit the following in accordance with Section 01 33 00 SUBMITTAL PROCEDURES:

SD-01 Preconstruction Submittals

Erection Drawings

SD-02 Shop Drawings

Fabrication Drawings Including Description of Connections

SD-03 Product Data

Shop Primer

Welding Electrodes and Rods

Direct Tension Indicator Washers

Non-Shrink Grout

SD-06 Test Reports

Class B Coating

Bolts, Nuts, and Washers

Weld Inspection Reports

Direct Tension Indicator Washer Inspection Reports

Bolt Testing Reports

Mill Testing Reports

SD-07 Certificates

Steel

Bolts, Nuts, and Washers

Galvanizing

AISC Fabrication Plant Quality Certification

AISC Erector Quality Certification

Welding Procedures and Qualifications

Welding Electrodes and Rods

1.3 AISC QUALITY CERTIFICATION

Work must be fabricated in an AISC Certified Fabrication Plant, Category. Submit AISC fabrication plant quality certification.

Work must be erected by an AISC Certified Erector, Category. Submit AISC erector quality certification.

1.4 QUALITY REQUIREMENTS

1.4.1 Preconstruction Submittals

1.4.1.1 Erection Drawings

Submit for record purposes. Indicate the sequence of erection, temporary shoring and bracing. The erection drawings must conform to AISC 303. Erection drawings must be reviewed, stamped and sealed by a registered professional engineer.

1.4.2 Fabrication Drawing Requirements

Submit fabrication drawings for approval prior to fabrication. Prepare in accordance with AISC 326 and AISC 325. Fabrication drawings must not be reproductions of contract drawings. Include complete information for the fabrication and erection of the structure's components, including the

location, type, and size of bolts, welds, member sizes and lengths, connection details, blocks, copes, and cuts. Use AWS A2.4 standard welding symbols. Shoring and temporary bracing must be designed and sealed by a registered professional engineer and submitted for record purposes, with calculations, as part of the drawings. Any deviations from the details shown on the contract drawings must be clearly highlighted on the fabrication drawings. Explain the reasons for any deviations from the contract drawings.

1.4.3 Certifications

1.4.3.1 Welding Procedures and Qualifications

Prior to welding, submit certification for each welder stating the type of welding and positions qualified for, the code and procedure qualified under, date qualified, and the firm and individual certifying the qualification tests.

Conform to all requirements specified in AWS D1.1/D1.1M.

PART 2 PRODUCTS

2.1 SYSTEM DESCRIPTION

Provide the structural steel system, including shop primer, complete and ready for use. Structural steel systems including design, materials, installation, workmanship, fabrication, assembly, erection, inspection, quality control, and testing must be provided in accordance with AISC 360, AISC 341, UFC 3-301-01 and UFC 3-310-04 except as modified in this contract.

2.2 STEEL

2.2.1 Structural Steel

Wide flange and WT shapes, ASTM A992/A992M with at least a 50 ksi yield specified. Angles, Channels and Plates, ASTM A36/A36M. Angles, Channels and Plates used in the sheet pile construction shall be ASTM A992/A992M with at least a 50 ksi yield specified. Submit mill testing reports with yield strengths clearly shown.

Commented [JS1]: Submittal Tag

2.2.2 Structural Steel Tubing

ASTM A500/A500M, Grade B 42 ksi for round tubing, 46 ksi for rectangular. Submit mill testing reports with yield strengths clearly shown.

Commented [JS2]: Submittal Tag

2.2.3 Steel Pipe

ASTM A53/A53M, Type E or S, Grade B, weight class. Submit mill testing reports with yield strengths clearly shown.

Commented [JS3]: Submittal Tag

2.3 BOLTS, NUTS, AND WASHERS

Submit the certified manufacturer's mill reports which clearly show the applicable ASTM mechanical and chemical requirements together with the actual test results for the supplied fasteners.

2.3.1 Common Grade Bolts

2.3.1.1 Bolts

ASTM A307, Grade A. The bolt heads and the nuts of the supplied fasteners must be marked with the manufacturer's identification mark, the strength grade and type specified by ASTM specifications.

2.3.1.2 Nuts

ASTM A563M, Grade A, heavy hex style.

2.3.1.3 Washers

ASTM F844.

2.3.2 High-Strength Bolts

2.3.2.1 Bolts

ASTM A325, Type 1.

2.3.2.2 Nuts

ASTM A563, Grade and Style as specified in the applicable ASTM bolt standard.

2.3.2.3 Direct Tension Indicator Washers

ASTM F959.

2.3.2.4 Washers

ASTM F436, plain carbon steel.

2.3.3 Foundation Anchorage

2.3.3.1 Anchor Rods

ASTM F1554 Gr 36, Class 1A.

2.3.3.2 Anchor Nuts

ASTM A563, Grade A, hex style.

2.3.3.3 Anchor Washers

ASTM F844 conforming to ASTM A276/A276M.

2.3.3.4 Anchor Plate Washers

ASTM A36/A36M conforming to ASTM A276/A276M.

2.4 STRUCTURAL STEEL ACCESSORIES

2.4.1 Welding Electrodes and Rods

AWS D1.1/D1.1M.

2.4.2 Non-Shrink Grout

ASTM C1107/C1107M, with no ASTM C827/C827M shrinkage. Grout must be nonmetallic.

A. Non-shrink grout beneath base and bearing plates shall be:
1. Five Star Grout by U.S. Grout Corp.
2. Sonogrout by L. Sonneborn Inc.
3. Horn Non-Metallic Grout by A.C. Horn Inc.
4. Non-Ferrous Non-Shrink Grout by the Burke Co., or
5. DISTRICT Approved Equal

2.4.3 Welded Shear Stud Connectors

ASTM A29/A29M, Type B. AWS D1.1/D1.1M.

2.4.4 Tie rods in Wing Wall Construction

ASTM A722/A722M, 150 ksi ultimate, 120 ksi yield.

2.5 GALVANIZING

ASTM F2329 for threaded parts or ASTM A123/A123M for structural steel members, as applicable, unless specified otherwise galvanize after fabrication where practicable.

2.6 FABRICATION

Fabrication must be in accordance with the applicable provisions of AISC 325. Fabrication and assembly must be done in the shop to the greatest extent possible. Punch, subpunch and ream, or drill bolt holes perpendicular to the surface of the member.

Compression joints depending on contact bearing must have a surface roughness not in excess of 500 micro inch as determined by ASME B46.1, and ends must be square within the tolerances for milled ends specified in ASTM A6/A6M.

Shop splices of members between field splices will be permitted only where indicated on the Contract Drawings. Splices not indicated require the approval of the District.

Do not splice truss top and bottom chords except as approved by the District. Chord splices must occur at panel joints at approximately the third point of the span. The center of gravity lines of truss members must intersect at panel points unless otherwise approved by the District. When the center of gravity lines do not intersect at a panel point, provisions must be made for the stresses due to eccentricity. Camber of trusses must be 1/8 inch in 10 feet unless otherwise indicated.

2.6.1 Markings

Prior to erection, members must be identified by a painted erection mark. Connecting parts assembled in the shop for reaming holes in field connections must be match marked with scratch and notch marks. Do not locate erection markings on areas to be welded. Do not locate match markings in areas that will decrease member strength or cause stress concentrations.

2.6.2 Shop Primer

SSPC Paint 20 or SSPC Paint 29, (zinc rich primer). Shop prime structural steel, except as modified herein, in accordance with SSPC PA 1. Do not prime steel surfaces embedded in concrete, galvanized surfaces, surfaces to receive epoxy coatings, or surfaces within 0.5 inch of the toe of the welds prior to welding (except surfaces on which metal decking is to be welded). If flash rusting occurs, re-clean the surface prior to application of primer. Apply primer in accordance with endorsement "P1" of AISC 201 to a minimum dry film thickness of 2.0 mil.

Slip critical surfaces must be primed with a Class B coating in accordance with AISC 325. Submit test report for Class B coating.

Prior to assembly, prime surfaces which will be concealed or inaccessible after assembly. Do not apply primer in foggy or rainy weather; when the ambient temperature is below 45 degrees F or over 95 degrees F; or when the primer may be exposed to temperatures below 40 degrees F within 48 hours after application, unless approved otherwise by the District. Repair damaged primed surfaces with an additional coat of primer.

A. Paint for both shop or primer coat and field touch-up shall be:
1. Tnemec Company, Incorporated's 99 Green Primer
2. Sherwin-Williams Company's Ken Kromik Metal Primer
3. Pratt & Lambert Incorporated's Noxide #96 Red Primer, or
4. DISTRICT Approved Equal.

B. Paint shall be compatible with Sprayed Fireproofing Systems.

2.6.2.1 Cleaning

SSPC SP 6/NACE No.3, except steel exposed in spaces above ceilings, attic spaces, furred spaces, and chases that will be hidden to view in finished construction may be cleaned to SSPC SP 3 when recommended by the shop primer manufacturer. Maintain steel surfaces free from rust, dirt, oil, grease, and other contaminants through final assembly.

2.7 DRAINAGE HOLES

Adequate drainage holes must be drilled to eliminate water traps. Hole diameter must be 1/2 inch and location must be indicated on the detail drawings. Hole size and location must not affect the structural integrity.

PART 3 EXECUTION

3.1 ERECTION

a. Erection of structural steel, except as indicated in item b. below, must be in accordance with the applicable provisions of AISC 325.

b. For low-rise structural steel buildings (60 feet tall or less and a maximum of 2 stories), the structure must be erected in accordance with AISC DESIGN GUIDE 10.

After final positioning of steel members, provide full bearing under base plates and bearing plates using nonshrink grout. Place nonshrink grout in accordance with the manufacturer's instructions.

3.1.1 STORAGE

Material must be stored out of contact with the ground in such manner and location as will minimize deterioration.

3.2 CONNECTIONS

Except as modified in this section, connections not detailed must be designed in accordance with AISC 360. Build connections into existing work. Do not tighten anchor bolts set in concrete with impact torque wrenches. Holes must not be cut or enlarged by burning. Bolts, nuts, and washers must be clean of dirt and rust, and lubricated immediately prior to installation.

3.2.1 Common Grade Bolts

ASTM A307 bolts must be tightened to a "snug tight" fit. "Snug tight" is the tightness that exists when plies in a joint are in firm contact. If firm contact of joint plies cannot be obtained with a few impacts of an impact wrench, or the full effort of a man using a spud wrench, contact the District for further instructions.

3.2.2 High-Strength Bolts

Provide direct tension indicator washers in all ASTM A325 bolted connections. Bolts must be installed in connection holes and initially brought to a snug tight fit. After the initial tightening procedure, bolts must then be fully tensioned, progressing from the most rigid part of a connection to the free edges.

3.2.2.1 Installation of Direct Tension Indicator Washers (DTIW)

Where possible, the DTIW must be installed under the bolt head and the nut must be tightened. If the DTIW is installed adjacent to the turned element, provide a flat washer between the DTIW and nut when the nut is turned for tightening, and between the DTIW and bolt head when the bolt head is turned for tightening. In addition to the LIW, provide flat washers under both the bolt head and nut when ASTM A490 bolts are used.

3.3 GAS CUTTING

Use of gas-cutting torch in the field for correcting fabrication errors will not be permitted on any major member in the structural framing. Use of a gas cutting torch will be permitted on minor members not under stress only after approval has been obtained from the District.

3.4 WELDING

Welding must be in accordance with AWS D1.1/D1.1M. Grind exposed welds smooth as indicated. Provide AWS D1.1/D1.1M qualified welders, welding operators, and tackers.

Develop and submit the Welding Procedure Specifications (WPS) for all welding, including welding done using prequalified procedures. Prequalified procedures may be submitted for information only; however, procedures that are not prequalified must be submitted for approval.

3.4.1 Removal of Temporary Welds, Run-Off Plates, and Backing Strips

Remove backing strips from bottom flange of moment connections, backgouge the root pass to sound weld metal and reinforce with a 5/16 inch fillet weld minimum.

3.5 SHOP PRIMER REPAIR

Repair shop primer in accordance with the paint manufacturer's recommendation for surfaces damaged by handling, transporting, cutting, welding, or bolting.

3.5.1 Field Priming

Steel exposed to the weather, or located in building areas without HVAC for control of relative humidity must be field primed. After erection, the field bolt heads and nuts, field welds, and any abrasions in the shop coat must be cleaned and primed with paint of the same quality as that used for the shop coat.

3.6 GALVANIZING REPAIR

Repair damage to galvanized coatings using ASTM A780/A780M zinc rich paint for galvanizing damaged by handling, transporting, cutting, welding, or bolting. Do not heat surfaces to which repair paint has been applied.

3.7 FIELD QUALITY CONTROL

Perform field tests, and provide labor, equipment, and incidentals required for testing. The District must be notified in writing of defective welds, bolts, nuts, and washers within 7 working days of the date of the inspection.

3.7.1 Welds

3.7.1.1 Visual Inspection

AWS D1.1/D1.1M. Furnish the services of AWS-certified welding inspectors for fabrication and erection inspection and testing and verification inspections.

Inspection by the District will include proper preparation, size, gaging location, and acceptability of welds; identification marking; operation and current characteristics of welding sets in use.

Inspect proper preparation, size, gaging location, and acceptability of welds; identification marking; operation and current characteristics of welding sets in use.

3.7.1.2 Nondestructive Testing

Nondestructive testing must be in accordance with AWS D1.1/D1.1M. Test locations must be selected by the District. If more than 25 percent of welds made by a welder contain defects identified by testing, then all welds made by that welder must be tested by ultrasonic testing, as approved by the District. When all welds made by an individual welder are required to be tested, magnetic particle testing must be used only in areas inaccessible to ultrasonic testing. Retest defective areas after repair. Submit weld inspection reports.

Testing frequency: Provide the following types and number of tests:

Test Type	Number of Tests
Ultrasonic	As indicated
Magnetic Particle	As indicated
Dye Penetrant	As indicated

3.7.2 Direct Tension Indicator Washers

3.7.2.1 Direct Tension Indicator Washer Compression

Direct tension indicator washers must be tested in place to verify that they have been compressed sufficiently to provide the 0.015 inch gap when the direct tension indicator washer is placed under the bolt head and the nut is tightened, and to provide the 0.005 inch gap when the direct tension indicator washer is placed under the turned element, as required by ASTM F959. Submit direct tension indicator washer inspection reports.

3.7.3 High-Strength Bolts

3.7.3.1 Testing Bolt, Nut, and Washer Assemblies

Test a minimum of 3 bolt, nut, and washer assemblies from each mill certificate batch in a tension measuring device at the job site prior to the beginning of bolting start-up. Demonstrate that the bolts and nuts, when used together, can develop tension not less than the provisions specified in AISC 360, depending on bolt size and grade. The bolt tension must be developed by tightening the nut. A representative of the manufacturer or supplier must be present to ensure that the fasteners are properly used, and to demonstrate that the fastener assemblies supplied satisfy the specified requirements. Submit bolt testing reports.

3.7.3.2 Inspection

Inspection procedures must be in accordance with AISC 360. Confirm and report to the District that the materials meet the project specification and that they are properly stored. Confirm that the faying surfaces have been properly prepared before the connections are assembled. Observe the specified job site testing and calibration, and confirm that the procedure to be used provides the required tension. Monitor the work to ensure the testing procedures are routinely followed on joints that are specified to be fully tensioned.

Inspection by the District will include calibration of torque wrenches for high-strength bolts.

3.7.3.3 Testing

The District has the option to perform nondestructive tests on 5 percent of the installed bolts to verify compliance with pre-load bolt tension requirements. Provide the required access for the District to perform the tests. The nondestructive testing will be done in-place using an ultrasonic measuring device or any other device capable of determining in-place pre-load bolt tension. The test locations must be selected by the District. If more than 10 percent of the bolts tested contain defects identified by testing, then all bolts used from the batch from which the tested bolts were taken, must be tested at the Contractor's expense. Retest new bolts after installation at the Contractor's expense.

-- End of Section --

SECTION 05 50 14

STRUCTURAL METAL FABRICATIONS

PART 1 GENERAL

1.1 REFERENCES

The publications listed below form a part of this specification to the extent referenced. The publications are referred to within the text by the basic designation only.

ALUMINUM ASSOCIATION (AA)

AA ADM	(2015) Aluminum Design Manual

AMERICAN GEAR MANUFACTURERS ASSOCIATION (AGMA)

AGMA ISO 22849-A12	(2012) Design Recommendations for Bevel Gears
AGMA ISO 23509-A08	(2008) Bevel and Hypoid Gear Geometry
ANSI/AGMA 6001	(2008E; R 2014) Design and Selection of Components for Enclosed Gear Drives

AMERICAN WELDING SOCIETY (AWS)

AWS D1.1/D1.1M	(2015; Errata 1 2015; Errata 2 2016) Structural Welding Code - Steel
AWS D1.2/D1.2M	(2014) Structural Welding Code - Aluminum

ASME INTERNATIONAL (ASME)

ASME B4.1	(1967; R 2009) Preferred Limits and Fits for Cylindrical Parts
ASME B46.1	(2009) Surface Texture, Surface Roughness, Waviness and Lay

ASTM INTERNATIONAL (ASTM)

ASTM A123/A123M	(2013) Standard Specification for Zinc (Hot-Dip Galvanized) Coatings on Iron and Steel Products
ASTM A325	(2014) Standard Specification for Structural Bolts, Steel, Heat Treated, 120/105 ksi Minimum Tensile Strength
ASTM A490	(2014a) Standard Specification for Structural Bolts, Alloy Steel, Heat Treated, 150 ksi Minimum Tensile Strength

ASTM A514/A514M	(2014) Standard Specification for High-Yield-Strength, Quenched and Tempered Alloy Steel Plate, Suitable for Welding
ASTM A780/A780M	(2009; R 2015) Standard Practice for Repair of Damaged and Uncoated Areas of Hot-Dip Galvanized Coatings
ASTM B177/B177M	(2011) Standard Guide for Engineering Chromium Electroplating
ASTM B766	(1986; R 2015) Standard Specification for Electrodeposited Coatings of Cadmium
ASTM D962	(1981; R 2014) Aluminum Powder and Paste Pigments for Paints
ASTM E165/E165M	(2012) Standard Practice for Liquid Penetrant Examination for General Industry
ASTM E446	(2014) Radiographs for Steel Castings Up to 2 In. (51mm) in Thickness
ASTM E709	(2015) Standard Guide for Magnetic Particle Examination
ASTM E94	(2004; R 2010) Radiographic Examination

1.2 SUBMITTALS

Submit the following in accordance with Section 01 33 00 SUBMITTAL PROCEDURES:

- SD-02 Shop Drawings
  - Detail Drawings
  - Welding of Structural Steel
  - Structural Steel Welding Repairs
  - Castings
- SD-03 Product Data
  - Filler Metal
  - Lubricant
- SD-06 Test Reports
  - Tests, Inspections, and Verifications
- SD-07 Certificates
  - Welding Qualifications

Application Qualification for Steel Studs; G

Welding of Aluminum

1.3 QUALITY REQUIREMENTS

1.3.1 Detail Drawings

Submit detail drawings for metalwork and machine work, prior to fabrication, include within the detail drawings catalog cuts, templates, fabrication and assembly details and type, grade and class of material as appropriate. Indicate methods of protecting the work during shipping, storage, field assembly, and installation.

1.3.2 Welding Qualifications

Prior to welding, submit certification for each welder stating the type of welding and positions qualified for, the code and procedure qualified under, date qualified, and the firm and individual certifying the qualification tests.

Conform to all requirements specified in AWS D1.1/D1.1M.

PART 2 PRODUCTS

2.1 FABRICATION

2.1.1 Structural Fabrication

Material must be straight before being laid off or worked. Perform straightening, if necessary, by methods that will not impair the metal. Sharp kinks or bends will be cause for rejection of the material. Material with welds will not be accepted except where welding is definitely specified, indicated or otherwise approved. Make bends using approved dies, press brakes or bending rolls. Where heating is required, take precautions to avoid overheating the metal and allow it to cool in a manner that will not impair the original properties of the metal. Proposed flame cutting of material, other than structural steel, is subject to approval and must be indicated on detail drawings. Shearing shall be accurate and all portions of the work neatly finished. Make corners square and true unless otherwise shown. Fillet re-entrant cuts to a minimum radius of 3/4 inch unless otherwise approved. Provide finished members free of twists, bends and open joints. Tighten bolts, nuts and screws.

2.1.1.1 Dimensional Tolerances for Structural Work

Measure dimensions using an approved calibrated steel tape of approximately the same temperature as the material being measured. The overall dimensions of an assembled structural unit must be within the tolerances indicated on the drawings or as specified in the particular section of these specifications for the item of work. Where tolerances are not specified in other sections of these specifications or shown, an allowable variation of 1/32 inch is permissible in the overall length of component members with both ends milled; component members without milled ends must not deviate from the dimensions shown by more than 1/16 inch for members 30 feet or less in length, and by more than 1/8 inch for members over 30 feet in length.

2.1.1.2 Structural Steel Fabrication

Structural steel may be cut by mechanically guided or hand-guided torches, provided an accurate profile with a surface that is smooth and free from cracks and notches is obtained. Prepare surfaces and edges in accordance with AWS D1.1/D1.1M, Subclause 3.2. Where structural steel is not to be welded, chipping or grinding will not be required except as necessary to remove slag and sharp edges of mechanically guided or hand-guided cuts not exposed to view. Chip, grind or machine to sound metal hand-guided cuts which are to be exposed or visible.

2.1.1.3 Structural Aluminum Fabrication

Lay out and cut aluminum in accordance with the AA ADM, Section 6.

2.1.2 Welding

2.1.2.1 Welding of Structural Steel

2.1.2.1.1 Welding Procedures for Structural Steel

Prequalify welding procedures for structural steel as described in AWS D1.1/D1.1M, Subclause 3.1 or qualify by tests as prescribed in AWS D1.1/D1.1M, Clause 4. Properly documented evidence of compliance with all requirements of these specifications for previous qualification tests establish a welding procedure as prequalified. For welding procedures qualified by tests, the test welding and specimen testing will be witnessed and the test report document signed by the District. Approval of any welding procedure will not relieve the responsibility for producing a finished structure meeting all requirements of these specifications. The Contractor will be directed or authorized to make any changes in previously approved welding procedures that are deemed necessary or desirable by the District.

a. Submit a complete schedule of welding procedures for each steel structure to be welded prior to commencing fabrication. Provide the schedule in conformance with the requirements specified in the provisions AWS D1.1/D1.1M, Clauses 2, 3, 4, 6, 7 and applicable portions of Clause 8.

b. Provide within the schedule detailed procedure specifications and tables or diagrams showing the procedures to be used for each required joint. Include in the welding procedures filler metal, preheat, interpass temperature and stress-relief heat treatment requirements. Clearly identify each welding procedure as being prequalified or required to be qualified by tests.

c. Show types and locations of welds designated or in the specifications to receive nondestructive testing in the welding procedures.

2.1.2.1.2 Welding Process

Perform welding of structural steel by an electric arc welding process using a method which excludes the atmosphere from the molten metal and conforms to the applicable provisions of AWS D1.1/D1.1M. Minimize residual stresses, distortion and shrinkage from welding.

2.1.2.1.3 Welding Technique

2.1.2.1.3.1 Filler Metal

Provide the electrode, electrode-flux combination and grade of weld metal conforming to the appropriate AWS specification for the base metal and welding process being used or be as shown where a specific choice of AWS specification allowables is required. Include the AWS designation of the electrodes to be used in the schedule of welding procedures. Use only low hydrogen electrodes for manual shielded metal-arc welding regardless of the thickness of the steel. Use a controlled temperature storage oven at the job site as prescribed by AWS D1.1/D1.1M, Subclause 3.5 to maintain low moisture of low hydrogen electrodes.

2.1.2.1.3.2 Preheat and Interpass Temperature

Perform preheating as required by AWS D1.1/D1.1M, Subclause 3.5 or as otherwise specified except that the temperature of the base metal must be at least 70 degrees F. Slowly and uniformly preheat the weldments by approved means to the prescribed temperature, held at that temperature until the welding is completed and then permitted to cool slowly in still air. Preheat embedments to assure good weld fusion. Preheat as directed by AWS D1.1/D1.1M.

2.1.2.1.3.3 Stress-Relief Heat Treatment

Where stress relief heat treatment is specified or shown, perform in accordance with the requirements of AWS D1.1/D1.1M, Subclause 5.8 unless otherwise authorized or directed.

2.1.2.1.4 Workmanship

Perform welding workmanship in accordance with AWS D1.1/D1.1M, Clause 3 and other applicable requirements of these specifications.

2.1.2.1.4.1 Preparation of Base Metal

Prior to welding inspect surfaces to be welded to ensure compliance with AWS D1.1/D1.1M, Subclause 3.2.

2.1.2.1.4.2 Temporary Welds

Make temporary welds, required for fabrication and erection, under the controlled conditions prescribed for permanent work. Make temporary welds using low-hydrogen welding electrodes and by welders qualified for permanent work as specified in these specifications. Conduct preheating for temporary welds as required by AWS D1.1/D1.1M for permanent welds except that the minimum temperature must be 120 degrees F in any case. In making temporary welds, do not strike arcs in other than weld locations. Remove each

temporary weld and grind flush with adjacent surfaces after serving its purpose.

2.1.2.1.4.3 Tack Welds

Subject tack welds that are to be incorporated into the permanent work to the same quality requirements as the permanent welds; clean and thoroughly fuse them with permanent welds. Perform preheating as specified above for temporary welds. Multiple-pass tack welds must have cascaded ends. Remove defective tack welds before permanent welding.

2.1.2.2 Welding of Steel Castings

Remove unsound material from the surfaces of steel castings, to be incorporated into welded connections, by chipping, machining, air-arc gouging or grinding. Do not weld major connections designed for transfer of stresses if the temperature of the casting is lower than 100 degrees F. Preheat castings containing over 0.35 percent carbon or over 0.75 percent manganese to a temperature not to exceed 450 degrees F and conduct welding while the castings are maintained at a temperature above 350 degrees F. Welding will not be permitted on castings containing carbon in excess of 0.45 percent except on written authorization. Castings requiring welding repairs after the first annealing and castings involving welding fabrication must be stress-relieved annealed prior to receiving final machining unless otherwise permitted.

2.1.2.3 Welding of Steel Studs

Conform to the requirements of AWS D1.1/D1.1M, Clause 7, except as otherwise specified for the procedures for welding steel studs to structural steel, including mechanical, workmanship, technique, stud application qualification, production quality control and fabrication and verification inspection procedures.

2.1.2.3.1 Application Qualification for Steel Studs

As a condition of approval of the stud application process, furnish certified test reports and certification that the studs conform to the requirements of AWS D1.1/D1.1M, Subclauses 7.2 and 7.3, certified results of the stud manufacturer's stud base qualification test, and certified results of the stud application qualification test as required by AWS D1.1/D1.1M, Subclause 7.6, prior to commencing fabrication, except as otherwise specified.

2.1.2.3.2 Production Quality Control

Conform to the requirements of AWS D1.1/D1.1M, Subclause 7.7, except as otherwise specified for quality control for production welding of studs. Weld studs on which pre-production testing is to be performed in the same general position as required on production studs (flat, vertical, overhead or sloping). If the reduction of the length of studs becomes less than normal as they are welded, stop welding immediately and do not resume until the cause has been corrected.

2.1.2.4 Welding of Aluminum

Conform to the requirements of AA ADM and AWS D1.2/D1.2M. Submit a certified report giving the results of the qualifying tests, and a complete schedule of the welding process for each aluminum fabrication to be welded prior to commencing fabrication.

2.1.3 Bolted Connections

2.1.3.1 Bolted Structural Steel Connections

Provide bolts, nuts and washers of the type specified or indicated. Equip all nuts with washers except for high strength bolts. Use beveled washers where bearing faces have a slope of more than 1:20 with respect to a plane normal to the bolt axis. Where the use of high strength bolts is specified or indicated, the materials, conform workmanship and installation to the applicable provisions of ASTM A325 or ASTM A490.

a. Accurately locate bolt holes, smooth, perpendicular to the member and cylindrical.

b. Drill or sub drill holes for regular bolts and ream in the shop and not more than 1/16 inch larger than the diameter of the bolt.

c. Match-ream or drill holes for fitted bolts in the shop. Remove burrs resulting from reaming. Keep bolt threads entirely outside of the holes. The body diameter of bolts must have tolerances as recommended by ASME B4.1for the class of fit specified. Place fitted bolts in reamed holes by selective assembly to provide an LN-2 fit.

d. Holes for high strength bolts must not have diameters more than 1/16 inch larger than bolt diameters. If the thickness of the material is not greater than the diameter of the bolts, the holes may be punched. If the thickness of the material is greater than the diameter of the bolts the holes may be drilled full size or sub punched or sub drilled at least 1/8 inch smaller than the diameter of the bolts and then reamed to full size. Poor matching of holes will be cause for rejection. Drifting occurring during assembly cannot distort the metal or enlarge the holes. Reaming to a larger diameter of the next standard size bolt will be allowed for slight mismatching.

2.1.3.2 Bolted Aluminum Connections

Conform to the requirements of AA ADM, Section 6 for punching, drilling, reaming and bolting for bolted aluminum connections.

2.1.4 Riveted Aluminum Connections

Conform to the requirements of AA ADM, Section 6 for punching, drilling, reaming and riveting for riveted aluminum connections.

2.1.5 Patterns

Take care to avoid sharp corners or abrupt changes in cross section; ample fillets are to be used in the construction of patterns. Add, as required, draft and increases in pattern thicknesses to conform to the standard foundry practice applied and as necessary to ensure that all metal

thicknesses of the finished castings conform to the dimensions shown and are within the tolerances specified in paragraph INSPECTION OF STEEL CASTINGS. Patterns for those parts listed below are furnished by the Contractor, become the property of the District and cannot be used for work under any other contract unless specifically authorized.

2.1.5.1 Fabrication of Patterns and Core Boxes

Substantially make patterns and core boxes that become the property of the District from thoroughly seasoned Grade B or better sugar pine, northern white pine or an approved equal. Securely glue and screw together built-up patterns and core boxes. Use approved high grade, water resistant glue that is suitably treated for resistance to fungus and insect infestation. Only light sections are permitted to be nailed. Counterbore and neatly fill screw holes with wood plugs. Dovetail or fasten with pull-out dowels loose pieces. Split patterns and core boxes must have metal dowels at partings. Skeleton or sweep patterns will not be accepted unless specifically authorized. Fill all nail and tool marks on molding surfaces with beeswax and sand all surfaces with No. 0 grade sandpaper. Finish patterns with not less than three coats of an approved phenolic-resin sealer colored in accordance with the standard trade practices for pattern colors. Stamp each pattern, core box and loose piece with the part mark shown. Furnish patterns complete with necessary core boxes and templates.

2.1.5.2 Disposition of Patterns, Core Boxes, and Templates

Substantially make and put together with screws the boxes and crates for the packing and shipment of patterns, core boxes and templates so that they can be used several times. Plainly mark each box and crate to indicate its contents. Thoroughly clean all patterns, core boxes and templates including those loaned to the Contractor by the District used, crate and deliver in first-class condition with a list of same in duplicate to the District before final payment is made. The Construction Manager reserves the right to withhold payment for final parts made from any pattern until such pattern is delivered. Varnish patterns and core boxes and give all templates a coat of an approved paint before being crated. Replace any pattern, core box or template lost in shipment or damaged.

2.1.6 Castings

Each casting and castings weighing more than 500 required pounds must bear cast or stamped heat numbers. Deviations from the dimensions of castings shown must not exceed amounts that will impair the strength of castings by more than 10 percent as computed from the dimensions shown. Dimensions of castings shown on approved detail drawings are finished dimensions. Castings that are warped or otherwise distorted or that are oversize to an extent that will interfere with proper fit with other parts of the machinery or structure will be rejected. The structure of metal in castings must be homogeneous and free from excessive nonmetallic inclusions. Excessive segregation of impurities or alloys at critical points in castings will be cause for rejection. Do not make repairs to castings prior to approval. Minor surface imperfections not affecting the strength of casting may be welded in the "green" if approved. Surface imperfections will be considered minor when the depth of the cavity prepared for welding is the lesser of 20 percent of the actual wall thickness or 1 inch. Defects other than minor surface imperfections may be welded only when specifically authorized in accordance with the following requirements:

a. The defects have been entirely removed and are judged not to affect the strength, use or machineability of the castings when properly welded and stress relieved.

b. The proposed welding procedure, stress relief and method of examination of the repair work have been submitted and approved.

2.1.7 Machine Work

Tolerances, allowances and gauges for metal fits between plain, non-threaded, cylindrical parts conform to ASME B4.1 for the class of fit shown or required unless otherwise shown on approved detail drawings. Where fits are not shown they will be suitable as approved. Tolerances for machine-finished surfaces designated by non-decimal dimensions must be within 1/64 inch. Sufficient machining stock will be allowed on placing pads to ensure true surfaces of solid material. Provide finished contact or bearing surfaces true and exact to secure full contact. Polish journal surfaces and finish all surfaces with sufficient smoothness and accuracy to ensure proper operation when assembled. Accurately machine parts entering any machine and all like parts be interchangeable except that parts assembled together for drilling or reaming of holes or machining will not be required to be interchangeable with like parts. Accurately locate all drilled holes bolts.

2.1.7.1 Finished Surfaces

Provide surface finishes, indicated or specified, in accordance with ASME B46.1. Values of required roughness heights are arithmetical average deviations expressed in microinches. These values are maximum. Lesser degrees will be satisfactory unless otherwise indicated. Compliance with surface requirements is determined by sense of feel and visual inspection of the work compared to Roughness Comparison Specimens in accordance with the provisions of ASME B46.1. Values of roughness width and waviness height must be consistent with the general type of finish specified by roughness height. Where the finish is not indicated or specified use that which is most suitable for the particular surface, provide the class of fit required and be indicated on the detail drawings by a symbol which conforms to ASME B46.1 when machine finishing is provided. Flaws such as scratches, ridges,

holes, peaks, cracks or checks which will make the part unsuitable for the intended use will be cause for rejection.

2.1.7.2 Unfinished Surfaces

Lay out all work to secure proper matching of adjoining unfinished surfaces unless otherwise directed. Where there is a large discrepancy between adjoining unfinished surfaces chip and grind smooth or machine to secure proper alignment. Unfinished surfaces must be true to the lines and dimensions shown and be chipped or ground free of all projections and rough spots. Fill in depressions or holes not affecting the strength or usefulness of the parts in an approved manner.

2.1.7.3 Pin Holes

Pin holes are to be bored true to gauges, smooth, straight and at right angles to the axis of the member. Do the boring after the member is securely fastened in position.

2.1.7.4 Gears

Provide gears that have machine cut teeth of a form conforming to applicable design requirements of AGMA ISO 22849-A12, AGMA ISO 23509-A08 and ANSI/AGMA 6001 unless otherwise specified or shown.

2.1.7.5 Shafting

Turn or grind shafting with hot-rolled or cold-rolled steel, as required, unless otherwise specified or authorized. Provide fillets where changes in section occur. Cold-finished shafting may be used where keyseating is the only machine work required.

2.1.7.6 Bearings

Bearings may be lined with Babbit or bronze unless otherwise specified or shown. Where the bearing pressure is in excess of 200 psi, line bearings with bronze. Pressures on lined bearings must not exceed 250 psi of projected area unless otherwise required or authorized. Anti-friction bearings of approved types and of sizes not less than those recommended by the bearing manufacturer for the duty intended will be permitted subject to approval. Properly align all bearings provided with a suitable means of lubrication. Install anti-friction bearings as required to provide for retention of the lubricant and to exclude dirt and grit.

2.1.8 Miscellaneous Provisions

2.1.8.1 Metallic Coatings

a. Zinc Coatings - Apply zinc coatings in a manner and of a thickness and quality conforming to ASTM A123/A123M. Where zinc coatings are destroyed by cutting, welding or other causes regalvanize the affected areas. Regalvanize coatings 2 ounces or heavier with a suitable low-melting zinc base alloy similar to the recommendations of the American Hot-Dip Galvanizers Association to the thickness and quality specified for the original zinc coating. Repair coatings less than 2 ounces in accordance with ASTM A780/A780M.

b. Cadmium Coatings - Provide cadmium coatings of a quality and thickness conforming to the requirements of ASTM B766 and inspections conforming to the requirements of ASTM E165/E165M.

c. Chromium Coatings - Apply chromium coatings for engineering in conformance with ASTM B177/B177M.

2.1.8.2 Cleaning of Corrosion-Resisting Steel

For cleaning and post weld treatment, see SECTION 05 50 15, CIVIL WORKS FABRICATIONS.

2.1.8.3 Lubrication

Provide the arrangement and details for lubrication as indicated. Thoroughly clean and lubricate, with an appropriate lubricant, all bearing surfaces before erection or assembly. Prior to use of the lubricant submit for approval product data supporting its use in the assembly that includes the following lubricating properties as they apply, temperature range, protection against corrosion, ability to remain in bearing, ability to seal out contaminants, cooling and friction.

2.1.9 Shop Assembly

Assemble only those machinery and structural units listed below each machinery and structural unit furnished in the shop to determine the correctness of the fabrication and matching of the component parts unless otherwise specified. Do not exceed those tolerances shown. Closely check each unit assembled to ensure that all necessary clearances have been provided and that binding does not occur in any moving part. Assembly in the shop must be in the same position as final installation in the field unless otherwise specified. Perform assembly and disassembly work in the presence of the Construction Manager unless waived in writing. Immediately remedy errors or defects disclosed by the Contractor without cost to the District. Before disassembly for shipment match-mark each piece of a machinery or structural unit to facilitate erection in the field. Indicate the location of match-marks by circling with a ring of white paint after the shop coat of paint has been applied or as otherwise directed.

2.2 TESTS, INSPECTIONS, AND VERIFICATIONS

Perform material tests and analyses certified by an approved laboratory to demonstrate that materials are in conformity with the specifications. These tests and analyses shall be performed and certified at the Contractor's expense. Perform tests, inspections, and verifications conforming to the requirements of the particular sections of these specifications for the respective items of work unless otherwise specified or authorized. Conduct tests in the presence of the Construction Manager if so required. Furnish specimens and samples for additional independent tests and analyses upon request by the Construction Manager. Properly label specimens and samples and prepare for shipment. Submit certified test reports for materials with all materials delivered to the site.

2.2.1 Nondestructive Testing

When doubt exists as to the soundness of any material part, such part may be subjected to any form of nondestructive testing determined by the District.

This may include ultrasonic, magnaflux, dye penetrant, x-ray, gamma ray or any other test that will thoroughly investigate the part in question. The cost of such investigation will be borne by the District. Any defects will be cause for rejection; replace and retest rejected parts at the Contractor's expense.

2.2.2 Tests of Machinery and Structural Units

The details for tests of machinery and structural units must conform to the requirements of the particular sections of these specifications covering these items. Assemble each complete machinery and structural unit and test them in the shop, in the presence of the Construction Manager, unless otherwise directed. Waiving of tests will not relieve the Contractor of responsibility for any fault in operation, workmanship or material that occurs before the completion of the contract or guarantee. After being installed at the site, operate each complete machinery or structural unit through a sufficient number of complete cycles to demonstrate to the satisfaction of the Construction Manager that it meets the specified operational requirements in all respects.

2.2.3 Inspection of Structural Steel Welding

Nondestructive testing of designated welds will be required. Supplemental examination of any joint or coupon cut from any location in any joint may be required.

2.2.3.1 Visual Examination

For all visual examination of completed welds clean and carefully examine for insufficient throat or leg sizes, cracks, undercutting, overlap, excessive convexity or reinforcement and other surface defects to ensure compliance with the requirements of AWS D1.1/D1.1M, Clause 6, Subclause 6.9, Part C.

2.2.3.2 Nondestructive Testing

Perform as designated or described in the sections of these specifications, the nondestructive testing of shop and field welds covering the particular items of work.

2.2.3.2.1 Testing Agency

The nondestructive testing of welds and the evaluation of tests as to the acceptability of the welds must be performed by a testing agency adequately equipped and competent to perform such services or by the Contractor using suitable equipment and qualified personnel. In either case, written approval of the examination procedures is required and perform the examination tests in the presence of the District. The evaluation of tests are subject to the approval and all records become the property of the District.

2.2.3.2.2 Examination Procedures

Conform to the following requirements.

2.2.3.2.2.1 Ultrasonic Testing

Make, evaluate and report ultrasonic testing of welds in conform to the requirements of AWS D1.1/D1.1M, Clause 6, Part C. Provide ultrasonic equipment capable of making a permanent record of the test indications. Make a record of each weld tested.

2.2.3.2.2.2 Magnetic Particle Inspection

Conform magnetic particle inspection of welds to the applicable provisions of ASTM E709.

2.2.3.2.2.3 Dye Penetrant Inspection

Perform dye penetrant inspection of welds conforming to the applicable provisions of ASTM E165/E165M.

2.2.3.2.3 Acceptability of Welds

Welds will be unacceptable if shown to have defects prohibited by AWS D1.1/D1.1M, or possess any degree of incomplete fusion, inadequate penetration or undercutting.

2.2.3.3 Test Coupons

The District reserves the right to require the Contractor to remove coupons from completed work when doubt as to soundness cannot be resolved by nondestructive testing. Should tests of any two coupons cut from the work of any welder show strengths less than that specified for the base metal it will be considered evidence of negligence or incompetence and such welder will be removed from the work. When coupons are removed from any part of a structure, repair the members cut in a neat manner with joints of the proper type to develop the full strength of the members. Peen repaired joints as approved or directed to relieve residual stress. The expense for removing and testing coupons, repairing cut members and the nondestructive testing of repairs is borne by the District or the Contractor in accordance with the Contract Clauses INSPECTION AND ACCEPTANCE.

2.2.3.4 Supplemental Examination

When the soundness of any weld is suspected of being deficient due to faulty welding or stresses that might occur during shipment or erection, the District reserves the right to perform nondestructive supplemental examinations before final acceptance. The cost of such inspection will be borne by the District.

2.2.4 Structural Steel Welding Repairs

Repair defective welds in the structural steel welding repairs in accordance with AWS D1.1/D1.1M, Subclause 3.7. Remove defective weld metal to sound metal by use of air carbon-arc or oxygen gouging. Do not use oxygen gouging on ASTM A514/A514M steel. Thoroughly clean surfaces before welding. Retest welds that have been repaired by the same methods used in the original inspection. Except for the repair of members cut to remove test coupons and found to have acceptable welds costs of repairs and retesting will be borne

by the Contractor. Submit welding repair plans for steel, prior to making repairs.

2.2.5 Inspection and Testing of Steel Stud Welding

Perform fabrication and verification inspection and testing of steel stud welding conforming to the requirements of AWS D1.1/D1.1M, Subclause 7.8 except as otherwise specified. The Construction Manager will serve as the verification inspector. Bend or torque test one stud in every 100 and studs that do not show a full 360 degree weld flash, have been repaired by welding or whose reduction in length due to welding is less than normal as required by AWS D1.1/D1.1M, Subclause 7.8. If any of these studs fail, bend or torque test two additional studs. If either of the two additional studs fails, all of the studs represented by the tests will be rejected. Studs that crack under testing in either the weld, base metal or shank will be rejected and replaced by the Contractor at no additional cost.

2.2.6 Inspection of Steel Castings

Perform radiographic inspection of steel castings at the casting plant as designated and as described in the section of these specifications covering the particular item of work. The procedure for making, evaluating and reporting the radiographic inspection must conform to the requirements of ASTM E94.

Use the applicable referenced standards as illustrated in ASTM E446. The evaluation of the radiographs will be subject to approval and all records will become the property of the District.

PART 3 EXECUTION

3.1 INSTALLATION

Thoroughly clean all parts to be installed. Remove packing compounds, rust, dirt, grit and other foreign matter. Clean holes and grooves for lubrication. Examine enclosed chambers or passages to make sure that they are free from damaging materials. Where units or items are shipped as assemblies they will be inspected prior to installation. Disassembly, cleaning and lubrication will not be required except where necessary to place the assembly in a clean and properly lubricated condition. Do not use pipe wrenches, cold chisels or other tools likely to cause damage to the surfaces of rods, nuts or other parts used for assembling and tightening parts. Tighten bolts and screws firmly and uniformly but take care not to overstress the threads. When a half nut is used for locking a full nut place the half nut first followed by the full nut. Lubricate threads of all bolts except high strength bolts, nuts and screws with an appropriate lubricant before assembly. Coat threads of corrosion-resisting steel bolts and nuts with an approved antigalling compound. Driving and drifting bolts or keys will not be permitted.

3.1.1 Alignment and Setting

Accurately align each machinery or structural unit by the use of steel shims or other approved methods so that no binding in any moving parts or distortion of any member occurs before it is fastened in place. The alignment of all parts with respect to each other must be true within the respective tolerances required. Set true machines to the elevations shown.

3.1.2 Blocking and Wedges

Remove all blocking and wedges used during installation for the support of parts to be grouted in foundations before final grouting unless otherwise directed. Blocking and wedges left in the foundations with approval must be of steel or iron.

3.1.3 Foundations and Grouting

Concrete subbases and frames and final grout under parts of machines in accordance with the procedures as specified in Section 03 31 01.00 10 CAST-IN-PLACE CONCRETE STRUCTURAL CONCRETE FOR CIVIL WORKS.

3.2 TESTS

3.2.1 Workmanship

Workmanship must be of the highest grade and in accordance with the best modern practices to conform TO the specifications for the item of work being furnished.

3.2.2 Production Welding

Perform production welding conforming to the requirements of AWS D1.1/D1.1M or AWS D1.2/D1.2M, as applicable. Studs, on which pre-production testing is to be performed, must be welded in the same general position as required on production items (flat, vertical, overhead or sloping). Test and production stud welding will be subjected to visual examination or inspection. If the reduction of the length of studs becomes less than normal as they are welded, stop welding immediately and do not resume until the cause has been corrected.

3.3 PROTECTION OF FINISHED WORK

3.3.1 Machined Surfaces

Thoroughly clean foreign matter off machined surfaces. Protect all finished surfaces. Oil and wrap unassembled pins and bolts with moisture resistant paper or protect them by other approved means. Wash finished surfaces of ferrous metals to be in bolted contact, with an approved rust inhibitor and coat them with an approved rust resisting compound for temporary protection during fabrication, shipping and storage periods. Paint finished surfaces of metals which will be exposed after installation, except corrosion resisting steel or nonferrous metals as specified in Section 09 06 90 SCHEDULES FOR PAINTING AND COATING.

3.3.2 Lubrication After Assembly

After assembly fill all lubricating systems with the appropriate lubricant and apply additional lubricant at intervals as required to maintain the equipment in satisfactory condition until acceptance of the work.

3.3.3 Aluminum

Protect aluminum that will be in contact with grout or concrete from galvanic or corrosive action, with a coat of zinc-chromate primer and a coat

of aluminum paint. Protect aluminum in contact with structural steel against galvanic or corrosive action with a coat of zinc-chromate primer and a coat of aluminum paint. Provide aluminum paint consisting of a aluminum paste conforming to ASTM D962, spar varnish and thinner compatible with the varnish. Field mix the aluminum paint in proportion of 2 pounds of paste, not more than one gallon of spar varnish and not more than one pint of thinner.

-- End of Section --

SECTION 05 50 15

CIVIL WORKS FABRICATIONS

PART 1 GENERAL

1.1 REFERENCES

The publications listed below form a part of this specification to the extent referenced. The publications are referred to within the text by the basic designation only.

ALUMINUM ASSOCIATION (AA)

AA DAF45	(2003; Reaffirmed 2009) Designation System for Aluminum Finishes

AMERICAN CONCRETE INSTITUTE INTERNATIONAL (ACI)

ACI 355.2	Qualification of Post-Installed Mechanical Anchors in Concrete & Commentary
ACI 355.4	Qualification of Post-Installed Adhesive Anchors in Concrete and Commentary

AMERICAN NATIONAL STANDARDS INSTITUTE (ANSI)

ANSI B212.15	Carbide Tipped Masonry Drills and Blanks for Carbide Tipped Masonry Drills

AMERICAN WELDING SOCIETY (AWS)

AWS D1.1/D1.1M	(2015; Errata 1 2015; Errata 2 2016) Structural Welding Code - Steel
AWS D1.6/D1.6M	2007 Structural Welding Code -Stainless Steel

ASTM INTERNATIONAL (ASTM)

ASTM A1	(2000; R 2010) Standard Specification for Carbon Steel Tee Rails
ASTM A123/A123M	(2013) Standard Specification for Zinc (Hot-Dip Galvanized) Coatings on Iron and Steel Products
ASTM A240/A240M	(2016) Standard Specification for Chromium and Chromium-Nickel Stainless Steel Plate, Sheet, and Strip for Pressure Vessels and for General Applications
ASTM A312/A312M	(2017) Standard Specification for Seamless, Welded, and Heavily Cold Worked Austenitic Stainless Steel Pipes

ASTM A36/A36M	(2014) Standard Specification for Carbon Structural Steel
ASTM A380/A380M	(2013) Standard Practice for Cleaning, Descaling, and Passivation of Stainless Steel Parts, Equipment, and Systems
ASTM A467/A467M	(2007; R 2012) Standard Specification for Machine Coil Chain
ASTM A48/A48M	(2003; R 2012) Standard Specification for Gray Iron Castings
ASTM A500/A500M	(2013) Standard Specification for Cold-Formed Welded and Seamless Carbon Steel Structural Tubing in Rounds and Shapes
ASTM A53/A53M	(2012) Standard Specification for Pipe, Steel, Black and Hot-Dipped, Zinc-Coated, Welded and Seamless
ASTM A653/A653M	(2015; E 2016) Standard Specification for Steel Sheet, Zinc-Coated (Galvanized) or Zinc-Iron Alloy-Coated (Galvannealed) by the Hot-Dip Process
ASTM A780/A780M	(2009; R 2015) Standard Practice for Repair of Damaged and Uncoated Areas of Hot-Dip Galvanized Coatings
ASTM A786/A786M	(2015a) Standard Specification for Hot-Rolled Carbon, Low-Alloy, High-Strength Low-Alloy, and Alloy Steel Floor Plates
ASTM A924/A924M	(2017) Standard Specification for General Requirements for Steel Sheet, Metallic-Coated by the Hot-Dip Process
ASTM A967/A967M	(2013) Standard Specification for Chemical Passivation Treatments for Stainless Steel Parts
ASTM B209	(2014) Standard Specification for Aluminum and Aluminum-Alloy Sheet and Plate
ASTM B209M	(2014) Standard Specification for Aluminum and Aluminum-Alloy Sheet and Plate (Metric)
ASTM B221	(2014) Standard Specification for Aluminum and Aluminum-Alloy Extruded Bars, Rods, Wire, Profiles, and Tubes
ASTM B429/B429M	(2010; E 2012) Standard Specification for Aluminum-Alloy Extruded Structural Pipe and Tube

ASTM C881	Standard Specification for Epoxy-Resin-Base Bonding Systems for Concrete
ASTM D1187/D1187M	(1997; E 2011; R 2011) Asphalt-Base Emulsions for Use as Protective Coatings for Metal

NATIONAL ASSOCIATION OF ARCHITECTURAL METAL MANUFACTURERS (NAAMM)

NAAMM MBG 531	(2009) Metal Bar Grating Manual

SOCIETY FOR PROTECTIVE COATINGS (SSPC)

SSPC Paint 20	(2002; E 2004) Zinc-Rich Primers (Type I, Inorganic, and Type II, Organic)
SSPC Paint 29	(2002; E 2004) Zinc Dust Sacrificial Primer, Performance-Based

U.S. ARMY CORPS OF ENGINEERS (USACE)

EM 385-1-1	(2014) Safety and Health Requirements Manual

ICC EVALUATION SERVICE, INC. (ICC-ES)

ICC-ES	ICC Evaluation Service, Inc.
ICC-ES AC193	Acceptance Criteria for Mechanical Anchors in Concrete Elements
ICC-ES AC308	Acceptance Criteria for Post-Installed Adhesive Anchors in Concrete Elements

U.S. GENERAL SERVICES ADMINISTRATION (GSA)

CID A-A-60005	(Basic; Notice 2) Frames, Covers, Gratings, Steps, Sump And Catch Basin, Manhole

1.2 SUBMITTALS

Submit the following in accordance with Section 01 33 00 SUBMITTAL PROCEDURES:

SD-02 Shop Drawings

Miscellaneous Metals and Standard Metal Articles

Shop Fabricated Metal Items

Detail Drawings

SD-03 Product Data

Current Evaluation Report for the Anchor

Miscellaneous Metals and Standard Metal Articles

Shop Fabricated Metal Items

Adhesive Anchor ESR Reports

Expansion Anchor ESR Reports

Lists Of Materials, And Records

Vertical Crossover Ladder

SD-04 Samples

Miscellaneous Metals and Standard Metal Articles

Shop Fabricated Metal Items

Samples Of Standard Or Fabricated Items

SD-05 Design Data

Guard And Anchorage Calculations

SD-06 Test Reports

Miscellaneous Metals and Standard Metal Articles

Shop Fabricated Metal Items

Quality Control Testing

Quality control testing is to verify effectiveness of cleaning agents

SD-11 Closeout Submittals

Evidence of Successful Completion of Adhesive Manufacturer's Installation Training Program

Certified Test Reports

1.3 QUALITY REQUIREMENTS

a. Form miscellaneous metalwork to shape and size, with sharp lines and angles and true curves. Drill and punch producing clean true lines and surfaces. Provide exposed surfaces of work in place with a smooth finish, and unless otherwise approved, flush exposed riveting. Where tight fits are required, mill joints. Cope or miter corner joints, well formed, and in true alignment. Accurately set work to established lines and elevations and securely fastened in place. Install in accordance with manufacturer's installation instructions and approved drawings, cuts, and details.

b. Perform welding continuously along the entire area of contact except where tack welding is permitted. Do not tack weld exposed connections of work in place. Grind exposed welds smooth.

c. Qualify welders, perform welding, welding inspection, and corrective welding, in accordance with AWS D1.1/D1.1M. Use procedures, materials, and equipment of the type required for the work.

1.4 ENVIRONMENTAL REQUIREMENTS

Do not clean or paint surface when damp or exposed to foggy or rainy weather, when metallic surface temperature is less than 5 degrees F above the dew point of the surrounding air, or when surface temperature is below 45 degrees F or over 95 degrees F, unless approved by the District.

1.5 WARRANTY

The warranty shall meet the requirements specified in Section 01 61 03 EQUIPMENT AND MATERIALS.

PART 2 PRODUCTS

2.1 MISCELLANEOUS METALS AND STANDARD METAL ARTICLES

Conform to the respective specifications and other designated requirements for miscellaneous metal materials and standard metal articles. Size as specified or indicated. Where material requirements are not specified, furnish materials suitable for the intended use and subject to approval.

2.1.1 Structural Steel, Steel Pipe and Miscellaneous Steel

See Section 05 12 00 STRUCTURAL STEEL for structural steel.

2.1.2 Stainless Steel

2.1.2.1 Plate, Sheet, Shapes, and Strip

ASTM A240/A240M, Class 316 OR Class 316L if it is to be welded.

2.1.2.2 Pipe

ASTM A312/A312M, welded, UNS S30400, NPS and schedule number or outside diameter and nominal wall thickness as shown, plain ends.

2.1.3 Aluminum

2.1.3.1 Structural Shapes, Sheets, and Plates

ASTM B209

2.1.3.2 Castings

Alloy F214 or Alloy F514

2.1.3.3 Pipes and Tubes

ASTM B429/B429M, Alloy 6005, Alloy 6063, or Alloy 6105

2.1.4 Bolts, Nuts, and Washers

Provide bolts, nuts, and washers of the material, grade, type, class, style and finish indicated or best suited for intended use.

2.1.4.1 Foundation Anchorage

See Section 05 12 00 STRUCTURAL STEEL

2.1.5 Expansion Anchors and Adhesive Anchors

2.1.5.1 Epoxy Adhesive Anchors

Materials: Adhesives shall have a current Evaluation Report (Adhesive Anchor ESR Reports) documenting testing and compliance with the requirements or ACI 355.4 and of ICC-ES AC308 for use with un-cracked concrete and with cracked concrete in the Seismic Design Category specified. Adhesive shall meet the physical requirements of ASTM C881, Type IV, Grade 3, Class B or C depending on site conditions. Adhesive shall be 2-component, 100 percent solids, insensitive to moisture. Cure temperature, pot life, and workability: Compatible with intended use and environmental conditions.

Submit the current Evaluation report for the anchor to be used.

Packaging: Disposable, self-contained cartridge system furnished in side-by-side cartridges designed to fit into a manually or pneumatically operated caulking gun, and with resin and hardener components isolated until mixing through manufacturer's static mixing nozzle. Nozzle shall be designed to dispense components in the proper ratio and to thoroughly blend the components for injection from the nozzle directly into prepared hole. Provide nozzle extensions as required to allow full-depth insertion and filing from the bottom of the hole.

Container markings: Include manufacturer's name, product name, batch number, mix ratio by volume, product expiration date, ANSI hazard classification, and appropriate ANSI handling precautions.

2.1.5.2 Expansion Anchors

Expansion anchors used for the Work shall hold a current ICC Evaluation Service Report demonstrating acceptance for use under the Florida building code.

Conditions of use: The acceptance report shall indicate acceptance of the product for use under the following conditions:

In regions of concrete where cracking has occurred or may occur.

To resist short-term loads due to wind forces.

To resist short-term loading due to seismic forces for the Seismic Design Category of the structure where the product will be used.

Expansion anchors description: Post-installed anchor assembly consisting of a threaded stud and a surrounding wedge expansion sleeve that is forced outward by torqueing the center stud to transfer loads from the stud to the concrete through bearing, friction, or both.

Do not use slug-in, lead cinch, and similar systems relying on deformation of lead alloy or similar materials to develop holding power.

Acceptance criteria: Current Expansion Anchor ESR Reports ICC-ES demonstrating that the anchors have been tested and qualified for performance in both cracked and un-cracked concrete, and for short-term loading due to wind and seismic forces for Seismic Design Categories A through F in accordance with ACI 355.2 and with ICC-ES AC193 (including all mandatory tests and optional tests for seismic tension and shear in cracked concrete).

Concrete anchor performance in the current ICC-ES Report shall be "Category 1" as defined in ACI 355.2. Submit the current Evaluation report for the anchor to be used.

2.1.6 Steel Rails

ASTM A1, No. 1.

2.1.7 Cast Iron Frames and Covers

Gray iron casting, in accordance with ASTM A48/A48M, Class 30-B. CID A-A-60005.

2.1.8 Gratings

a. Gray cast iron ASTM A48/A48M, Class 40.

b. Metal plank grating, non-slip requirement, aluminum ASTM B209M, ASTM B209, 6061-T6; steel ASTM A653/A653M, Z275 G90.

c. Metal bar type grating NAAMM MBG 531.

2.1.9 Floor Plates, Patterned

Floor plate ASTM A786/A786M. Steel plate must not be less than 14 gage.

2.1.10 Aluminum Stair Nosings

a. For installation in cast-in-place stairs.

b. Material: Cast aluminum abrasive nosings with aluminum oxide granules integrally cast into metal, forming permanent, nonslip, long-wearing surface.

c. Configuration: 4 inches wide, fabricated with concealed integrally cast stainless steel anchors at approximately 12-inch centers. Length to extend within 3 inches of stair edge on each side.

2.1.11 Submittals Requirements

This applies to SHOP FABRICATED METAL ITEMS also. Submit the following:

a. Detail drawings indicating material thickness, type, grade, and class; dimensions; and construction details. Include in the drawings catalog cuts, erection details, manufacturer's descriptive data and

installation instructions, and templates. Detail drawings for the following items.

b. Lists of materials, and records which identify the disposition of approved material and fabricated items in the work.

c. Samples of the following items:. Provide full size samples of standard or fabricated items, taken from manufacturer's stock, and complete as required for installation in the structure. Samples may be installed in the work, provided each sample is clearly identified and its location recorded.

d. Certified test reports for materials tests and analyses.

2.2 SHOP FABRICATED METAL ITEMS

Conform shop fabricated metal items to the requirements and details as specified or shown and to the workmanship provisions and other applicable fabrication requirements as specified in Section 05 50 14 STRUCTURAL METAL FABRICATIONS.

2.2.1 Railings

Provide railings as type specified and show, furnish, and install complete with all fittings, brackets, fasteners, sleeves, anchors, and other appurtenances as shown and as required for proper installation. Design handrails to resist a minimum concentrated load of 200 lbf in any direction at any point of the top of the rail or 50 lb/ft applied in any direction at the top of the rail, whichever is more severe. Provide stiffened post bases if required to meet strength requirements. Submit guard and anchorage calculations. Anchorage design shall consider edge distance of anchors and spacing.

2.2.1.1 Materials

Steel handrails, including inserts in concrete, provide steel pipe conforming to ASTM A53/A53M or structural tubing conforming to ASTM A500/A500M, Grade A or B of equivalent strength. Provide steel railings with 1-1/2 inch nominal size, 1.9 O.D. actual size. Railings must be hot-dip galvanized shop painted. Provide pipe collars of stainless steel. Provide aluminum handrails of 1-1/2 inch nominal Schedule 40 pipe ASTM B429/B429M 1-3/4 inch square aluminum semi-hollow tube with rounded corners ASTM B221. Aluminum guard and handrail shall have an anodized finish, 0.7 mil thick, applied to exposed surfaces after cutting. Aluminum Association Specification M12-C22-A41, mechanical finish non-specular as fabricated, chemical finish-medium matte, anodic coating-clear Class I Architectural. Provide all fasteners of Series 300 stainless steel.

2.2.1.2 Fabrication

Rigid joints in railings must be of welded, threaded, or slip-on fittings assembly and be flush-finished. Reinforce welded joints with tight-fitting interior sleeves assembled by welding rails and posts to flush-type fittings, or by mitering and welding joining rails and posts. Exposed threads are not permitted on assembled threaded joints. Use tight fitting slip-on fittings. Provide self-locking, concealed type fasteners for slip-on fittings. Provide aluminum or stainless steel fasteners for aluminum

fittings. Provide stainless steel fasteners for steel fittings. Expansion joints in railings must be an inner-sleeved slip-joint, with one end of the sleeve secured to one rail and the ends of the adjoining rails separated a minimum of 1 inch in the installed position. Locate expansion joints in rails near the intersection of rails and posts. Make bends in railings in a manner that railings are not crushed and maintain their original cross-sectional shape. Ground welds smooth. Provide railings free of burrs, sharp corners, and sharp edges.

2.2.2 Gratings and Cover Plates

Provide grating and cover plates of the material and size shown, and fabricated in sectional panels of the width and length shown, or as appropriate, to accurately fit within the supporting recess frames. Provide openings through panels as shown or as required. Provide hinged panels with hinges of the type shown or suitable for the application. Galvanize steel gratings and cover plates after fabrication.

2.2.2.1 Grating

Gratings are as specified in previous paragraph titled GRATINGS. Band edges of gratings and openings through gratings which require the cutting of more than one bearing bar. Provide fasteners of the type recommended by the manufacturer and approved. Provide nonslip nosing on stair tread gratings.

2.2.2.2 Cover Plates

Provide cover plates as specified in paragraph titled FLOOR PLATES, PATTERNED. Provide cover plate panels with holes for insertion of removal tool as shown or as required. Remove sharp edges and burrs from plates.

2.2.3 Steel Stairs

Provide steel stairs complete with structural or formed channel stringers, grating treads, landings, columns, handrails, and necessary bolts and other fastenings as indicated. Close exposed ends of stringers. Conform to ASTM A36/A36M for structural steel. Stairs and accessories must be galvanized after fabrication. Integral nosings must have anchors extended into the concrete fill. Fabricate stair treads of steel gratings of the type specified in paragraph GRATING. Provide grating treads with slip-resistant nosings. Provide bolts, nuts and other fastenings as shown and as required for proper installation. Use lock washers under all nuts.

2.2.4 Recess Frames

Fabricate recess frames of structural shapes of the type shown. Grind welded joints in frames smooth. Galvanize steel frames after fabrication. Anchor frames to supports in the manner shown and not be continuous across contraction or expansion joints.

2.2.5 Ladders

Provide fixed-rail metal ladders conforming to the requirements of EM 385-1-1 and to details shown. Fabricate ladders of structural steel as shown and be galvanized after fabrication or aluminum where shown. Fabricate ladders of solid-section rod rungs fitted into holes in bar side rails and weld. Make splices in side rails using full penetration welds and provide a flush

and smooth transition between connecting ends. Grind all welds smooth. Weld ladder rails to bent-bar supporting brackets anchored to supporting structure as shown.

2.2.6 Ladder Rungs and Grab Bars

Fabricate Ladder rungs and grab bars from steel rods in accordance with the details and be galvanized after fabrication.

2.2.7 Vertical Crossover Ladder

Provide one vertical crossover ladder that shall be used to provide access over wave wall near the Structure S-470 valve assemblies on the dam crest. Ladder shall be Vestil Manufacturing model COLV-6-70-20 or approved equal. Provide stainless steel anchor bolts, embedded threaded inserts, and threaded caps. Submit product data for the vertical crossover ladder for approval and acceptance.

2.2.8 Safety Chains

Galvanized welded steel, proof coil chain tested in accordance with ASTM A467/A467M, Class CS; straight link style, 3/16 inch diameter, minimum 12 links per foot; and with bolt type snap hooks on each end. Eye bolts for attachment of chains must be galvanized 3/8 inch bolt with 3/4 inch eye, anchored as indicated. Furnish two chains for each guarded opening.

2.2.9 Surface Finishes

2.2.9.1 Galvanizing and Zinc Repair

Hot-dip galvanize items specified to be galvanized, when practicable and not indicated otherwise, after fabrication. Galvanize in accordance with ASTM A123/A123M, ASTM A653/A653M, or ASTM A924/A924M, as applicable. Re-galvanize areas where zinc coatings are destroyed by cutting, welding or other causes. Re-galvanize coatings 2 ounces or heavier with a suitable low-melting zinc base alloy similar to the recommendations of the American Hot-Dip Galvanizers Association to the thickness and quality specified for the original zinc coating. Repair coatings less than 2 ounces in accordance with ASTM A780/A780M.

2.2.9.2 Nonferrous Metal Surfaces

Protect by plating, anodic, or organic coatings.

2.2.9.3 Aluminum Surfaces

Before finishes are applied, remove roll marks, scratches, rolled-in scratches, kinks, stains, pits, orange peel, die marks, structural streaks, and other defects which will affect uniform appearance of finished surfaces. Unexposed sheet, plate and extrusions may have mill finish as fabricated. Sandblast castings' finish, medium matte, AA DAF45. Unless otherwise specified, provide all other aluminum items with anodized finish. Provide a coating thickness not less than that specified for protective and decorative type finishes for items used in interior locations or Architectural Class I type finish for items used in exterior locations in AA DAF45. Items to be anodized receive a polished satin finish.

2.3 STAINLESS WELDING

2.3.1 Welding

Welding shall conform to AWS D1.6/D1.6M: 2007 Structural Welding Code - Stainless Steel.

2.3.2 Cleaning and passivation

Following shop fabrication of stainless steel members, clean and passivate fabrications.

Finish requirements: Remove free iron, heat tint oxides, weld scale and other impurities, and obtain a passive finished surface.

Submit quality control testing to verify effectiveness of cleaning agents and procedures and to confirm that finished surfaces are clean and passivated.

Conduct sample runs using test specimens with proposed cleaning agents and procedures as required to avoid adverse effects on surface finishes and base materials.

Pre-clean, chemically descale (pickle), and final clean fabrications in accordance with the requirements of in accordance with ASTM A380/A380M or ASTM A967/A967M to remove deposited contaminants before shipping.

Passivation by citric acid treatment is not allowed.

If degreasing is required before cleaning to remove scale or iron oxide, cleaning (pickling) treatments with citric acid are permissible; however, these treatments shall be followed by inorganic cleaners such as nitric-hydrofluoric acid.

All fabricated stainless steel surfaces (except machined surfaces) shall be abrasive blast cleaned with maximum 80 mesh size sand that has been certified clean and free of ferrous materials, to a uniform finish and until all heat tint and embedded iron are removed. Blasting shall be followed by testing for embedded or free iron by spraying the stainless steel with phosphoric acid. Twenty-four (24) hours after spraying the stainless steel shall be rinsed with water containing a maximum total solid content of 200 ppm and allowed to dry. Any signs of iron contamination after the stainless steel is dry shall require the phosphoric acid spraying and rinsing to be repeated until a chemically clean passive finished surface is obtained.

Provide acid descaling (pickling) in accordance with Table A1.1 of Annex A1 of ASTM A380/A380M.

After pickling, final cleaning of stainless steel shall conform to Part II of Table A2.1 of Annex A2 of ASTM A380/A380M.

After cleaning, inspect using methods specified for "gross inspection" in ASTM A380/A380M.

Improperly or poorly cleaned and passivated materials shall not be shipped and will not be accepted at the job site.

PART 3 EXECUTION

3.1 GENERAL INSTALLATION REQUIREMENTS

Install items at locations indicated, according to manufacturer's instructions. Verify all measurements and take all field measurements necessary before fabrication. Exposed fastenings must be compatible materials, generally match in color and finish, and harmonize with the material to which fastenings are applied. Include materials and parts necessary to complete each item, even though such work is not definitely shown or specified. Poor matching of holes for fasteners is cause for rejection. Conceal fastenings where practicable. Thickness of metal and details of assembly and supports provide strength and stiffness. Form joints exposed to the weather to exclude water. Items listed below require additional procedures.

3.2 ANCHORAGE, FASTENINGS, AND CONNECTIONS

3.2.1 Anchorage

Provide anchorage where necessary for fastening miscellaneous metal items securely in place. Include for anchorage not otherwise specified or indicated slotted inserts, expansion anchors, and powder-driven fasteners, when approved for concrete; toggle bolts and through bolts for masonry; machine and carriage bolts for steel; through bolts, lag bolts, and screws for wood. Do not use wood plugs in any material. Provide non-ferrous attachments for non-ferrous metal. Make exposed fastenings of compatible materials, generally matching in color and finish, to which fastenings are applied. Conceal fastenings where practicable.

3.2.2 Adhesive Anchors

3.2.2.1 Installer qualifications

Submit evidence of successful completion of adhesive manufacturer's installation training program.

Submit evidence of current certification for installation of inclined and overhead anchors under sustained tension loading.

3.2.2.2 General

Execution of this work is restricted to installers who have personally completed the adhesive manufacturer's on-site training for the products to be installed, and who are personally certified through a qualified certification program described under Quality Requirements and accepted by the Engineer and the Building Official.

Do not install holes or adhesive until training is complete.

Perform work in strict compliance with the accepted MPII and the following instructions. Where the accepted MPII and the instructions conflict, the MPII shall prevail.

Install reinforcing bars and all thread rods to embedment depth, and at spacing and locations indicated on the Drawings.

If embedment depth is not indicated, contact Engineer for requirements.

3.2.2.3 Preparation

Do not begin installation of adhesive bonded anchors until:

Concrete has achieved an age of at least 21 days after placement.

On-site training in installation of adhesive bonded anchors by manufacturer's technical representative is complete. Do not drill holes in concrete or install adhesive and embeds in holes.

Review manufacturer's printed installation instructions (MPII) and "conditions of use" stipulated in the Evaluation Report before beginning work.

Bring to the attention of the adhesive manufacturer's technical representative any discrepancies between these documents, and resolve before proceeding with installation.

Install adhesive bonded anchors in full compliance with manufacturer's printed installation instructions using personnel who have successfully completed manufacturer's on-site training for products to be used and who hold certifications specified in this Section.

Confirm that adhesive and substrate receiving adhesive are within manufacturer's recommended range for temperature and moisture conditions, and will remain so during the curing time for the product.

3.2.2.4 Hole Sizing and Installation

Drilling holes:

Determine location of reinforcing bars or other obstructions with a nondestructive indicator device, and mark locations with construction crayon on the surface of the concrete.

Do not damage or cut existing reinforcing bars, electrical conduits, or other items embedded in the existing concrete without prior acceptance by Engineer.

3.2.2.5 Hole Drilling Equipment

Electric or pneumatic rotary impact type with medium or light impact.

Installation of anchors in cored holes is not permitted.

Set drill to "rotation only" mode, or to "rotation plus hammer" mode in accordance with the manufacturer's installation instructions and the requirements of the Evaluation Report.

Where edge distances are less than 2 inches and "rotation plus hammer" mode is permitted, use lighter impact equipment to prevent micro-cracking and concrete spalling during the drilling process.

Drill bits: Carbide-tipped in accordance with ANSI B212.15 unless otherwise recommended by the manufacturer or required as a "condition of use" in the Evaluation Report.

Hollow drill bits with flushing air systems are preferred. Air supplied to hollow drill bits shall be free of oil, water, or other contaminants that will reduce bond.

3.2.2.6 Hole Diameter

As recommended in the manufacturer's installation instructions and the Evaluation Report.

3.2.2.7 Hole Depth

As recommended in the manufacturer's installation instructions to provide minimum effective embedment indicated on the Drawings.

3.2.2.8 Obstructions in Drill Path

If an existing reinforcing bar or other obstruction is hit while drilling a hole, unless otherwise accepted by Engineer, stop drilling. Prepare and fill the hole with dry-pack mortar. Relocate the hole to miss the obstruction and drill another hole to the required depth.

Obtain Engineer's acceptance of distance between abandoned and relocated holes before proceeding with the relocation.

Allow dry-pack mortar to cure to a strength equal to that of the surrounding concrete before resuming drilling in the area.

Epoxy grout may be substituted for dry-pack mortar when accepted by Engineer.

Avoid drilling an excessive number of holes in an area of a structural member, which would excessively weaken the member and endanger the stability of the structure.

When existing reinforcing steel is encountered during drilling and when specifically accepted by Engineer, enlarge the hole by 1/8 inch, core through the existing reinforcing steel at the larger diameter, and resume drilling at original hole diameter using pneumatic rotary impact drill.

Bent bar reinforcing bars: Where edge distances are critical, and interference with existing reinforcing steel is likely, if acceptable to Engineer, drill hole at 10 degree (or less) angle from axis of reinforcing bar or all thread rod being installed.

3.2.2.9 Cleaning Holes

Insert air nozzle to bottom of hole and blow out loose dust.

Use compressed air that is free of oil, water, or other contaminants that will reduce bond.

Provide minimum air pressure of 90 pounds per square inch for not less than 4 seconds.

Using a stiff bristle brush with diameter that provides contact around the full perimeter of the hole, vigorously brush hole to dislodge compacted drilling dust.

Insert brush to the bottom of the hole and withdraw using a simultaneous twisting motion.

Repeat at least 4 times.

Repeat the preceding steps as required to remove drilling dust or other material that will reduce bond, and in the number of cycles required by the MPII and the Evaluation Report.

Leave prepared holes clean and dry.

Protect prepared and cleaned holes from contamination and moisture until adhesive is installed.

Re-clean and dry previously prepared holes if, in the opinion of the Engineer, the hole has become contaminated after initial cleaning.

3.3 INSTALLATION OF ADHESIVE AND INSERTS

3.3.1 Clean and Prepare Inserts Reinforcing Bars and All Thread Rods

Prepare embedded length of reinforcing bars and all thread rods by cleaning to bare metal. Inserts shall be free of oil, grease, paint, dirt, mill scale, rust, or other coatings that will reduce bond.

Solvent clean prepared reinforcing bars and all thread rods over the embedment length in accordance with SSPC SP-1. Provide an oil and grease free surface for bonding of adhesive to steel.

3.3.2 Fill Holes with Adhesive

Starting at the bottom of the hole, fill hole with adhesive inserting the reinforcing bar or all thread rod.

Fill hole as nozzle is withdrawn without creating air voids.

Unless otherwise indicated on the Drawings, fill hole with sufficient adhesive so that excess adhesive is extruded out of the hole when the reinforcing bar or all thread rod is inserted.

Where necessary, seal hole at surface of concrete to prevent loss of adhesive during curing.

3.3.3 Installing Reinforcing Bars and All Thread Rods

Unless otherwise indicated on the Drawings, install bars and rods perpendicular to the concrete surface.

Insert reinforcing bars and all thread rods into adhesive in accordance with manufacturer's recommended procedures.

Confirm that insert has reached the designated embedment in the concrete, and that adhesive completely surrounds the embedded portion.

Securely brace bars and all thread rods in place to prevent displacement while the adhesive cures. Bars and rods displaced during curing will be considered damaged and replacement will be required.

Clean excess adhesive from the mouth of the hole.

3.3.4 Curing and Loading

Provide and maintain curing conditions recommended by the adhesive manufacturer for the period required to fully cure the adhesive at the temperature of the concrete.

Do not disturb or load bonded embeds until manufacturer's recommended cure time, based on temperature of the concrete, has elapsed.

3.4 POST-INSTALLATION ACTIVITIES

Do not bend bars or all-thread rods after bonding to the concrete, unless accepted in advance by the Engineer. Attachments to all thread rods:

After assemblies to be connected are placed, install nuts and washers for threaded rods as indicated on the Drawings.

3.4.1 Field Quality Control

Provide field quality control over the Work of this Section as specified in Section 01 45 00.00 10 CONTRACTOR QUALITY CONTROL.

Special inspections, special tests, and structural observation.

Provide special inspections as required by the MPII.

3.5 INSTALLATION: POST-INSTALLED MECHANICAL ANCHORS

3.5.1 General

Install anchors in accordance with the manufacturer's instructions, ACI 355.2, the anchor's ICC-ES Report. Where conflict exists between the ICC-ES Report and the requirements in this Section, the requirements of the ICC-ES Report shall control.

Where anchor manufacturer recommends the use of special tools and/or specific drill bits for installation, provide and use such tools.

After anchors have been positioned and inserted into concrete or masonry, do not:

Remove and reuse/reinstall anchors.

Loosen or remove bolts or studs.

Holes drilled into concrete and masonry:

Do not drill holes in concrete or masonry until the material has achieved its minimum specified compression strength (f'c or f'm).

Accurately locate holes:

Before drilling holes, use a reinforcing bar locator to identify the position of all reinforcing steel, conduit, and other embedded items within a 6 inch radius of each proposed hole.

If the hole depth exceeds the range of detection for the rebar locator, the Engineer may require radiographs of the area designated for investigation before drilling commences.

Exercise care to avoid damaging existing reinforcement and other items embedded in concrete and masonry.

If embedments are encountered during drilling, immediately stop work and notify the Engineer. Await Engineer's instructions before proceeding.

Unless otherwise indicated on the Drawings, drill holes perpendicular to the concrete surface into which they are placed.

Drill using anchor manufacturer's recommended equipment and procedures.

Unless otherwise recommended by the manufacturer, drill in accordance with the following:

Drilling equipment: Electric or pneumatic rotary type with light or medium impact. Where edge distances are less than 2 inches, use lighter impact equipment to prevent micro-cracking and concrete spalling during drilling process.

Drill bits: Carbide-tipped in accordance with ANSI B212.15. Hollow drills with flushing air systems are preferred.

Drill holes at manufacturer's recommended diameter and to depth required to provide the effective embedment indicated.

Clean and prepare holes as recommended by the manufacturer and as required by the ICC-ES Report for that anchor.

Unless otherwise recommended by anchor manufacturer, remove dust and debris using brushes and clean compressed air.

Repeat cleaning process as required by the manufacturer's installation instructions.

When cleaning holes for stainless steel anchors, use only stainless steel or non-metallic brushes.

Insert and tighten (or torque) anchors in full compliance with the manufacturer's installation instructions.

Once anchor is tightened (torque), do not attempt to loosen or remove its bolt or stud. Concrete anchors: Minimum effective embedment lengths unless otherwise indicated on the Drawings:

Concrete Anchors			
Nominal Diameter	**Minimum Effective Embedment Length**		**Minimum Member Thickness**
	In Concrete	**In Grouted Masonry**	
3/8 inch	2 1/2 inch	2 5/8 inch	8 inch
1/2 inch	3 1/2 inch	3 1/2 inch	8 inch
5/8 inch	4 1/2 inch	4 1/2 inch	10 inch
3/4 inch	5 inch	5 1/4 inch	12 inch

3.5.2 Field Quality Control

Provide field quality control over the Work of this Section as specified in Section 01 45 00.00 10 CONTRACTOR QUALITY CONTROL.

Special inspections, special tests, and structural observation
Provide special inspections as required by the MPII.

3.6 FINISHES

3.6.1 Dissimilar Materials

Where dissimilar metals are in contact, protect surfaces with a coat conforming to SSPC Paint 20 or SSPC Paint 29 to prevent galvanic or corrosive action. Where aluminum is in contact with concrete, plaster, mortar, masonry, wood, or absorptive materials subject to wetting, protect with ASTM D1187/D1187M, asphalt-base emulsion.

3.6.2 Field Preparation

Remove rust preventive coating just prior to field erection, using a remover approved by the rust preventive manufacturer. Provide surfaces, when assembled, free of rust, grease, dirt and other foreign matter.

3.7 ATTACHMENT OF GUARD AND HANDRAILS

As indicated on the drawings.

3.8 MOUNTING OF SAFETY CHAINS

Mount safety chains 3 feet 6 inches and 2 feet above the floor.

3.9 COVER PLATES AND FRAMES

Install the tops of cover plates and frames flush with floor.

3.10 LADDERS

Secure to the adjacent construction with the clip angles attached to the stringer and as indicated on the drawings.

3.11 STEEL STAIRS

Provide anchor bolts, grating fasteners, washers, and all parts or devices necessary for proper installation. Provide lock washers under nuts.

3.12 INSTALLATION OF GUARD POSTS (BOLLARDS/PIPE GUARDS)

As indicated on the drawings.

-- End of Section --

SECTION 07 61 13

STANDING SEAM SHEET METAL ROOFING

PART 1 GENERAL

1.1 SUMMARY

Summary of Work: The Work of this Section shall consist of furnishing all labor, material, and equipment necessary for installation of a standing seam metal roof system, related flashing and accessory components in accordance with the Drawings and applicable codes and as specified herein.

1.2 RELATED WORK SPECIFIED ELSEWHERE

There are other specification sections that relate to this section that are not necessarily cited herein.

1.3 REFERENCES

The publications listed below form a part of this specification to the extent referenced. The publications are referred to within the text by the basic designation only.

ASTM INTERNATIONAL (ASTM)

ASTM A653/A653M	(2015; E 2016) Standard Specification for Steel Sheet, Zinc-Coated (Galvanized) or Zinc-Iron Alloy-Coated (Galvannealed) by the Hot-Dip Process
ASTM D522/D522M	(2014) Mandrel Bend Test of Attached Organic Coatings
ASTM D2247	(2015) Testing Water Resistance of Coatings in 100% Relative Humidity

UNDERWRITERS LABORATORIES (UL)

UL 790	(2004; Reprint Jul 2014) Standard Test Methods for Fire Tests of Roof Coverings

2017 FLORIDA BUILDING CODE - TEST PROTOCOLS FOR HIGH VELOCITY HURRICANE ZONE, 6TH EDITION (RAS)

RAS 133	Standard Procedure for Installation of Metal Roof Systems

1.4 SUBMITTALS

Submit the following in accordance with Section 01 33 00 SUBMITTAL PROCEDURES:

SD-02 Shop Drawings

Roof System

SD-03 Product Data

Roof panels

SD-07 Certificates

Certificate of Compliance

SD-08 Manufacturer's Instructions

Installation instructions

1.5 QUALITY CONTROL

1.5.1 Certificates of Compliance

Submit a certificate of compliance indicating a Florida Product Approval or Miami-Dade Notice of Acceptance (NOA) documentation for use in a High Velocity Hurricane Zone, with a system maximum design pressure that exceeds the uplift design pressure.

Contractor shall provide installer experienced in performing work of this section who has specialized in installation of work similar to that required for this project.

The manufacturer shall be capable of providing field service representation during construction and approving erection method.

Submit a shop drawing of the roof system indicating the dimensions, panel layout, construction details, method of anchorage, and installation.

Submit product data for the roof panels.

Submit installation instructions for the roof panels.

1.6 DESIGN REQUIREMENTS

Loads: Provide exterior panel systems capable of resisting wind pressures acting both inward and outward as indicated on the Drawings.

Fasteners holding together various elements of the roof panels shall be designed to withstand design load requirements set forth in these Specifications.

System shall accommodate movement of components without buckling, failure of joint seals, undue stress on fasteners, or other detrimental effects, when subject to seasonal temperature ranges.

1.7 DELIVERY, STORAGE, AND HANDLING

Deliver materials to site in an undamaged condition. Store materials off the ground to provide protection against oxidation caused by ground contact.

Store materials protected from exposure to harmful weather conditions and at temperature conditions recommended by manufacturer. Stack prefinished material to prevent twisting, bending, abrasion, scratching and denting.

Provide factory installed strippable vinyl film protective coating to panels.

Deliver materials in manufacturer's original packaging with identification labels intact.

1.8 WARRANTY

The warranty shall meet the requirements specified in SECTION 01 61 03 EQUIPMENT AND MATERIALS.

PART 2 PRODUCTS

2.1 ACCEPTABLE MANUFACTURERS

Petersen Aluminum Corporation, or District approved equal.

Products referenced in this Section are manufactured by Petersen Aluminum Corporation, unless specified otherwise.

2.2 ROOF AND SOFFIT PANELS

Roof panel: Pac-Clad Snap-Clad Galvanized Panel, uninsulated, standing-seam profile metal panel. This product has been reviewed by the Miami-Dade Product Control Division and accepted by the Board of Rules and Appeals to be used in Miami-Dade County and other areas according to Notice of Acceptance No (NOA). 07.0301.01.

1. Design: 24 gage steel, G90 galvanized steel. Steel sheets shall be hot dipped galvanized Grade A structural quality in compliance with ASTM A653/A653M.

2. Panel dimensions: 16 inches wide x 1-3/4 inches high manufactured in continuous lengths.

3. Fasteners: Manufacturer's standard high performance concealed fastener clip system for UL 790 assemblies. Panels shall be installed along the rib with SNAP CLAD Clips secured with two for individual and eight for continuous clips #10 x 1-1/2 inch fasteners per clip as specified in the NOA; the screws shall be of sufficient length to penetrate through the sheathing a minimum of 3/16 inches. The female rib of panel is snapped over the male rib of panel. Panel clips shall be spaced a maximum of 24 inches O.C. within the field. For perimeter and corner zones, per NOA continuous clips shall be used.

4. Finish: Pac-Clad Kynar 500 fluorocarbon coating applied over epoxy-type prime coat. Coatings shall meet the requirements of ASTM D522/D522M. Provide 20-year warranty against rusting, fading, peeling, and chalking. There shall be no changes in the finish coating hardness when tested for 1,000 hours in accordance with ASTM D2247.

5. Color: Selected by District from Manufacturer's standard colors after award of Contract.

Fascia, trim, closure panels, and flashings; inside and outside: Same material and finish as respective inside and outside elements of panels.

Fasteners: Manufacturer's standard for applicable use. Exposed fasteners shall be gasketed-type with finish to match panel.

PART 3 EXECUTION

3.1 INSPECTION

Examine surfaces to receive metal panels and notify District in writing of any defects.

Starting of Work by Contractor shall constitute acceptance of Work of others as satisfactory.

3.2 JOB CONDITIONS

Protection: Installed Work shall be carefully protected against disfiguration, contamination, or damage by mechanical abuse or contact with other harmful materials. Wherever exposure to damage is critical, provide protective cover or barriers.

3.3 INSTALLATION

Installation of metal panel system shall be performed under experienced supervision and in strict accordance with Shop Drawings. Install the Snap-Clad 24 Gage Steel Metal Panel panels including flashing penetrations, valleys, end laps and accessories in compliance with Petersen Aluminum Corporation current, published installation instructions and in compliance with the minimum requirements detailed in Roofing Application Standard RAS 133.

Roof panels shall be set plumb and true to line as indicated on Drawings with Work properly centered and well secured to adjoining construction, in such manner as to be rigid and watertight. Attachment to structure shall be by approved fastening method.

1. Erect panels to a tolerance not exceeding 1/4 inch per 20 feet.

2. Fittings shall have laps of sufficient width to make Work watertight.

3. Limit use of exposed fasteners to extent indicated in Manufacturer's data and instructions with fasteners driven and tightened full depth to head.

4. Anchor component parts securely in place, providing for necessary thermal and structural movement without undue distortion or overstressing of any component.

5. Roof panels shall transition into side walls as indicated on Drawings. Transition to form a continuous seam line with concealed flashings.

Install soffit panels in accordance with Manufacturer's recommendations.

Install metal trim members, flashings, and similar accessory items straight and plumb, level and true, securely fastened, and sealed in place as recommended by panel Manufacturer. Trim member lengths as long as practical, with joints concealed or located in unobjectionable places. Fittings shall have laps of sufficient width to make Work watertight.

Apply 1 coat of bituminous paint, concealed, on 1 or both surfaces wherever dissimilar metals would otherwise be in contact to eliminate possibility of corrosive or electrolytic action between metals.

Install sealants at joints and where sheets adjoin other work, as shown or required to achieve wind and watertight condition with Work in accordance with Manufacturer's recommendations.

1. Calking shall include head, joint, and sill members where panel meets structure. Perimeter calking shall also include such items as door frames, windows, and other penetrations occurring within system.

2. Make lap joints in flashing watertight with 2 beads of sealant.

3.4 CLEAN UP

After installation has been completed, Contractor shall thoroughly clean metal components, interior and exterior, exposed surfaces in a manner acceptable to the District. Cleaning procedures shall be in accordance with metal panel Manufacturer's recommendations.

Work that is damaged or defective shall be replaced at no additional cost to the District.

-- End of Section --

SECTION 07 92 00

JOINT SEALANTS

PART 1 GENERAL

1.1 REFERENCES

The publications listed below form a part of this specification to the extent referenced. The publications are referred to within the text by the basic designation only.

ASTM INTERNATIONAL (ASTM)

ASTM C1193	(2013) Standard Guide for Use of Joint Sealants
ASTM C1330	(2002; R 2013) Standard Specification for Cylindrical Sealant Backing for Use with Cold Liquid-Applied Sealants
ASTM C1521	(2013) Standard Practice for Evaluating Adhesion of Installed Weatherproofing Sealant Joints
ASTM C734	(2015) Low-Temperature Flexibility of Latex Sealants After Artificial Weathering
ASTM C834	(2014) Latex Sealants
ASTM C919	(2012) Use of Sealants in Acoustical Applications
ASTM C920	(2014a) Standard Specification for Elastomeric Joint Sealants
ASTM D217	(2010) Cone Penetration of Lubricating Grease
ASTM D2452	(2015) Standard Test Method for Extrudability of Oil- and Resin-Base Caulking Compounds
ASTM D2453	(2015) Standard Test Method for Shrinkage and Tenacity of Oil- and Resin-Base Caulking Compounds
ASTM D412	(2016) Standard Test Methods for Vulcanized Rubber and Thermoplastic Elastomers - Tension
ASTM D624	(2000; R 2012) Tear Strength of Conventional Vulcanized Rubber and Thermoplastic Elastomers
ASTM E84	(2016) Standard Test Method for Surface Burning Characteristics of Building Materials

~~ASTM D1056~~	~~(2014) Standard Specification for Flexible Cellular Materials - Sponge or Expanded Rubber~~
~~ASTM D1667~~	~~(2005; R 2011) Flexible Cellular Materials - Poly (Vinyl Chloride) Foam (Closed-Cell)~~
ASTM C509	(2006; R 2015) Elastomeric Cellular Preformed Gasket and Sealing Material
ASTM C1311	(2014) Standard Specification for Solvent Release Agents

CALIFORNIA DEPARTMENT OF PUBLIC HEALTH (CDPH)

CDPH SECTION 01350	(2004; Add 2004-01) Standard Practice for the Testing of Volatile Organic Emissions from Various Sources Using Small-Scale Environmental Chambers

SCIENTIFIC CERTIFICATION SYSTEMS (SCS)

SCS	SCS Global Services (SCS) Indoor Advantage

UNDERWRITERS LABORATORIES (UL)

UL 2818	(2013) GREENGUARD Certification Program For Chemical Emissions For Building Materials, Finishes And Furnishings

1.2 SUBMITTALS

Submit the following in accordance with Section 01 33 00 SUBMITTAL PROCEDURES:

SD-03 Product Data

Sealants

Primers

Bond Breakers

Backstops

SD-06 Test Reports

Field Adhesion

SD-07 Certificates

Indoor Air Quality

SD-11 Closeout Submittals

Indoor Air Quality For Interior Sealants

Indoor Air Quality For Interior Floor Joint Sealants

Indoor Air Quality For Interior Acoustical Sealants

Indoor Air Quality For Interior Caulking

1.3 PRODUCT DATA

Include storage requirements, shelf life, curing time, instructions for mixing and application, and accessories. Provide manufacturer's Material Safety Data Sheet (MSDS) for each solvent, primer and sealant material proposed.

1.4 CERTIFICATIONS

1.4.1 Indoor Air Quality Certifications

Submit required indoor air quality certifications in one submittal package.

1.4.1.1 Adhesives and Sealants

Provide products certified to meet indoor air quality requirements by UL 2818 (Greenguard) Gold, SCS Global Services Indoor Advantage Gold or provide validation by other third-party program that products meet the requirements of this paragraph. Sealants and non-aerosol adhesive products used on the interior of the building (defined as inside of the weatherproofing system) must meet either emissions requirements of CDPH SECTION 01350 (limit requirements for either office or classroom spaces regardless of space type). Provide current product certification documentation from certification body.

1.5 ENVIRONMENTAL CONDITIONS

Apply sealant when the ambient temperature is between 40 and 90 degrees F.

1.6 DELIVERY AND STORAGE

Deliver materials to the jobsite in unopened manufacturers' sealed shipping containers, with brand name, date of manufacture, color, and material designation clearly marked thereon. Label elastomeric sealant containers to identify type, class, grade, and use. Handle and store materials in accordance with manufacturer's printed instructions. Prevent exposure to foreign materials or subjection to sustained temperatures exceeding 90 degrees F or lower than 0 degrees F. Keep materials and containers closed and separated from absorptive materials such as wood and insulation.

1.7 QUALITY REQUIREMENTS

1.7.1 Compatibility with Substrate

Verify that each sealant is compatible for use with each joint substrate in accordance with sealant manufacturer's printed recommendations for each application.

1.7.2 Joint Tolerance

Provide joint tolerances in accordance with manufacturer's printed instructions.

1.7.3 Mock-Up

Provide a mock-up of each type of sealant using materials, colors, and techniques approved for use on the project. Approved mock-ups may be incorporated into the Work.

1.7.4 Adhesion

Provide in accordance with ASTM C1193 or ASTM C1521.

PART 2 PRODUCTS

2.1 ACCEPTABLE MANUFACTURERS

Manufacturer listed under each type of material is to establish minimum quality and specific type. Equivalent products of manufacturers listed below will be acceptable subject to suitability for intended condition.

1. Sealants and Caulking:

    a. Bostik Construction Products Div.

    b. Pecora Corporation

    c. Sonneborn Building Products

    d. Tremco Manufacturing Company

    e. W. R. Meadows, Inc.

2.2 PRODUCT SUSTAINABILITY CRITERIA

For products in this section, where applicable and to extent allowed by performance criteria, provide and document the following:

2.2.1 Reduce Volatile Organic Compounds (VOC) (Low-Emitting Materials) for Products

Reduced VOC content is identified for some products in this section.

2.3 SEALANTS

Provide sealant products that have been tested, found suitable, and documented as such by the manufacturer for the particular substrates to which they will be applied.

2.3.1 Interior Sealants

Provide ASTM C834 ASTM C920, Type S or M, Grade NS, Class 12.5, Use NT. Provide certification of indoor air quality for interior sealants. Location(s) and color(s) of sealant for the following. Note, color "as selected" refers to manufacturer's full range of color options

LOCATION	COLOR
a. Small voids between walls or partitions and adjacent lockers, casework, shelving, door frames, built-in or surface mounted equipment and fixtures, and similar items.	As selected by Owner
b. Perimeter of frames at doors, windows, and access panels which adjoin exposed interior concrete and masonry surfaces.	As selected by Owner
c. Joints of interior masonry walls and partitions which adjoin columns, pilasters, concrete walls, and exterior walls unless otherwise detailed.	As selected by Owner
d. Joints between edge members for acoustical tile and adjoining vertical surfaces.	As selected by Owner
e. Interior locations, not otherwise indicated or specified, where small voids exist between materials specified to be painted.	As selected by Owner
f. Joints between bathtubs and ceramic tile; joints between shower receptors and ceramic tile; joints formed where non-planar tile surfaces meet.	As selected by Owner
g. Joints formed between tile floors and tile base cove; joints between tile and dissimilar materials; joints occurring where substrates change.	As selected by Owner
h. Behind escutcheon plates at valve pipe penetrations and showerheads in showers.	As selected by Owner

2.3.2 Exterior Sealants

1. In accordance with ASTM C920 Type M, Grade P (pourable), Class 25 and Type M, Grade NS (non-sag), Class 25; one component polyurethane; able to cure at room temperature to firm, highly resilient polymer; able to perform satisfactory when continuously submerged in water and exposed to direct sunlight in dry condition; with the following properties determined at 75 degrees Fahrenheit and 50 percent relative humidity:

   a. Manufacturer: Pecora Dynatrol I-XL or Tremco Dymonic FC

   b. Base: Polyurethane rubber.

   c. Application time: Minimum 2 hours.

   d. Cure time: Maximum 3 days.

   e. Tack free time: Maximum 24 hours.

   f. Ultimate hardness: Non-sag 25, Pourable/SL 40, within 5 Shore A.

   g. Tensile strength: Non-sag 95 pounds per square inch minimum and self-leveling minimum 170 pounds per square inch when tested in accordance with ASTM D412.

   h. Ultimate elongation: Minimum 340 percent when tested in accordance with ASTM D412.

i. Tear resistance: Non-sag 45 pounds per inch minimum and self-leveling minimum 85 pounds per inch when tested in accordance with ASTM D624, Die C.

j. Service temperature range: Minus 25 degrees to 158 degrees Fahrenheit.

LOCATION	COLOR
a. Joints and recesses formed where frames and subsills of windows, doors, louvers, and vents adjoin masonry, concrete, or metal frames. Use sealant at both exterior and interior surfaces of exterior wall penetrations.	As selected by Owner
b. Joints between new and existing exterior masonry walls.	As selected by Owner
c. Masonry joints where shelf angles occur.	As selected by Owner
d. Joints in wash surfaces of stonework.	As selected by Owner
e. Expansion and control joints.	As selected by Owner
f. Interior face of expansion joints in exterior concrete or masonry walls where metal expansion joint covers are not required.	As selected by Owner
g. Voids where items pass through exterior walls.	As selected by Owner
h. Metal reglets, where flashing is inserted into masonry joints, and where flashing is penetrated by coping dowels.	As selected by Owner
i. Metal-to-metal joints where sealant is indicated or specified.	As selected by Owner
j. Joints between ends of gravel stops, fasciae, copings, and adjacent walls.	As selected by Owner

2.3.3 Floor Joint Sealants

ASTM C920, Type S or M, Grade P, Class 25, Use T. Provide certification of indoor air quality for interior floor joint sealants. Provide location(s) and color(s) of sealant as follows. Note, color "as selected" refers to manufacturer's full range of color options:

LOCATION	COLOR
a. Seats of metal thresholds for exterior doors.	As selected by Owner
b. Control and expansion joints in floors, slabs, ceramic tile, and walkways.	As selected by Owner

2.3.4 Acoustical Sealants

Rubber or polymer based acoustical sealant in accordance with ASTM C919 to have a flame spread of 25 or less and a smoke developed rating of 50 or less when tested in accordance with ASTM E84. Provide non-staining acoustical sealant with a consistency of 250 to 310 when tested in accordance with ASTM D217. Acoustical sealant must remain flexible and adhesive after 500 hours of accelerated weathering as specified in ASTM C734. Provide certification of indoor air quality for interior acoustical sealants.

2.3.5 Preformed Sealants

Provide preformed sealants of polybutylene or isoprene-butylene based pressure sensitive weather resistant tape or bead sealants capable of sealing out moisture, air and dust when installed as recommended by the manufacturer. At temperatures from minus 30 to plus 160 degrees F, sealants must be non-bleeding and have no loss of adhesion.

2.3.5.1 Tape

Tape sealant: Provide cross section dimensions as indicated.

2.3.5.2 Bead

Bead sealant: Provide cross section dimensions as indicated.

2.3.5.3 Foam Strip

Provide foam strip of polyurethane foam with cross section dimensions as indicated. Provide foam strip capable of sealing out moisture, air, and dust when installed and compressed in accordance with manufacturer's printed instructions. Service temperature must be minus 40 to plus 275 degrees F. Furnish untreated strips with adhesive to hold them in place. Do not allow adhesive to stain or bleed onto adjacent finishes. Saturate treated strips with butylene waterproofing or impregnate with asphalt.

2.4 PRIMERS

Non-staining, quick drying type and consistency as recommended by the sealant manufacturer for the particular application. Provide primers for interior applications that meet the indoor air quality requirements of the paragraph SEALANTS above.

2.5 BOND BREAKERS

Type and consistency as recommended by the sealant manufacturer to prevent adhesion of the sealant to the backing or to the bottom of the joint. Provide bond breakers for interior applications that meet the indoor air quality requirements of the paragraph SEALANTS above.

2.6 BACKSTOPS

Provide glass fiber roving, neoprene, butyl, polyurethane, or polyethylene foams free from oil or other staining elements as recommended by sealant manufacturer. Provide 25 to 33 percent oversized backing for closed cell and 40 to 50 percent oversized backing for open cell material, unless otherwise indicated. Provide backstop material that is compatible with sealant. Do not use oakum or other types of absorptive materials as backstops.

2.6.1 Rubber

Closed-cell expanded sponge rubber manufactured from synthetic polymer neoprene base, or resilient polyethylene foam backer rod. In accordance with ASTM C509, ASTM C1330, Type O.

2.7 CAULKING

For interior use and only where there is little or no anticipated joint movement. Provide in accordance with ASTM D2452 and ASTM D2453. Provide certification of indoor air quality for interior caulking.

2.8 CLEANING SOLVENTS

Provide type(s) recommended by the sealant manufacturer, ASTM C1311 and in accordance with environmental requirements herein. Protect adjacent aluminum and bronze surfaces from solvents. Provide solvents for interior applications that meet the indoor air quality requirements of the paragraph SEALANTS above.

2.9 FORM/SILICONE FIRE STOP SYSTEM

A. Fire Stop Foam:

1. Medium density, 2-part silicone elastomer with fire resistant properties to meet fire rating of wall, ceiling or floor as indicated.

2. Have ability to form in place and fill complex geometrics to provide a tight, compressive fit.

3. Have ability to be poked through and resealed easily when penetration is modified.

B. Fire Stop Sealant:

1. One part silicone elastomeric sealant with fire resistant properties to meet fire rating of wall, ceiling or floor as indicated, and stop the passage of fire, smoke, fumes and water through the fire-rated penetration.

2. Little or no damming shall be required for small, simple penetrations.

C. Damming and Priming Materials:

1. Include particleboard plywood or other suitable forming materials to contain foam and/or sealant.

2. Provide prime coat for sealant if recommended by manufacturers.

D. Use in the following locations where indicted:

1. All penetrations in partition wall between Generator and Equipment Rooms. Seal from both sides.

E. Manufacturer:

1. Dow Corning RTV Fire Stop Foam and Fire Stop Sealant.

2. General Electric TRV 7403 and Pensil 851.

PART 3 EXECUTION

3.1 FIELD QUALITY CONTROL

Perform a field adhesion test in accordance with manufacturer's instructions and ASTM C1193, Method A or ASTM C1521, Method A, Tail Procedure. Remove sealants that fail adhesion testing; clean substrates, reapply sealants, and re-test. Test sealants adjacent to failed sealants. Submit field adhesion test report indicating tests, locations, dates, results, and remedial actions taken.

3.2 SURFACE PREPARATION

Prepare surfaces according to manufacturer's printed installation instructions. Clean surfaces from dirt, frost, moisture, grease, oil, wax, lacquer, paint, or other foreign matter that would destroy or impair adhesion. Remove oil and grease with solvent; thoroughly remove solvents prior to sealant installation. Wipe surfaces dry with clean cloths. When resealing an existing joint, remove existing caulk or sealant prior to applying new sealant. For surface types not listed below, provide in accordance with sealant manufacturer's printed instructions for each specific surface.

3.2.1 Steel Surfaces

Remove loose mill scale by sandblasting or, if sandblasting is impractical or would damage finished work, scraping and wire brushing. Remove protective coatings by sandblasting or using a residue free solvent. Remove resulting debris and solvent residue prior to sealant installation.

3.2.2 Aluminum or Bronze Surfaces

Remove temporary protective coatings from surfaces that will be in contact with sealant. When masking tape is used as a protective coating, remove tape and any residual adhesive prior to sealant application. For removing protective coatings and final cleaning, use non-staining solvents recommended by the manufacturer of the item(s) containing aluminum or bronze surfaces.

3.2.3 Concrete and Masonry Surfaces

Where surfaces have been treated with curing compounds, oil, or other such materials, remove materials by sandblasting or wire brushing. Remove laitance, efflorescence and loose mortar from the joint cavity. Remove resulting debris prior to sealant installation.

3.2.4 Wood Surfaces

Ensure wood surfaces that will be in contact with sealants are free of splinters, sawdust and other loose particles.

3.3 SEALANT PREPARATION

Do not add liquids, solvents, or powders to sealants. Mix multicomponent elastomeric sealants in accordance with manufacturer's printed instructions.

3.4 APPLICATION

3.4.1 Joint Width-To-Depth Ratios

Acceptable Ratios:

JOINT WIDTH	JOINT DEPTH	
	Minimum	**Maximum**
For metal, glass, or other nonporous surfaces:		
1/4 inch (minimum)	1/4 inch	1/4 inch
over 1/4 inch	1/2 of width	Equal to width
For wood, concrete, including precast panels, masonry, or stone:		
1/4 inch (minimum)	1/4 inch	1/4 inch
over 1/4 inch to 1/2 inch	1/4 inch	Equal to width
over 1/2 inch to 1 inch	1/2 inch	5/8 inch
Over 1 inch	prohibited	

Unacceptable Ratios: Where joints of acceptable width-to-depth ratios have not been provided, clean out joints to acceptable depths and grind or cut to acceptable widths without damage to the adjoining work. Grinding is prohibited at metal surfaces.

3.4.2 Unacceptable Sealant Use

Do not install sealants in lieu of other required building enclosure weatherproofing components such as flashing, drainage components, and joint closure accessories, or to close gaps between walls, floors, roofs, windows, and doors, that exceed acceptable installation tolerances. Remove sealants that have been used in an unacceptable manner and correct building enclosure deficiencies to comply with contract documents requirements.

3.4.3 Masking Tape

Place masking tape on the finished surface on one or both sides of joint cavities to protect adjacent finished surfaces from primer or sealant smears. Remove masking tape within 10 minutes of joint filling and tooling.

3.4.4 Backstops

Provide backstops dry and free of tears or holes. Tightly pack the back or bottom of joint cavities with backstop material to provide joints in specified depths. Provide backstops where indicated and where backstops are not indicated but joint cavities exceed the acceptable maximum depths specified in JOINT WIDTH-TO-DEPTH RATIOS Table.

3.4.5 Primer

Clean out loose particles from joints immediately prior to application of. Apply primer to joints in concrete masonry units, wood, and other porous surfaces in accordance with sealant manufacturer's printed instructions. Do not apply primer to exposed finished surfaces.

3.4.6 Bond Breaker

Provide bond breakers to surfaces not intended to bond in accordance with, sealant manufacturer's printed instructions for each type of surface and sealant combination specified.

3.4.7 Sealants

Provide sealants compatible with the material(s) to which they are applied. Do not use a sealant that has exceeded its shelf life or has jelled and cannot be discharged in a continuous flow from the sealant gun. Apply sealants in accordance with the manufacturer's printed instructions with a gun having a nozzle that fits the joint width. Work sealant into joints so as to fill the joints solidly without air pockets. Tool sealant after application to ensure adhesion. Apply sealant uniformly smooth and free of wrinkles. Upon completion of sealant application, roughen partially filled or unfilled joints, apply additional sealant, and tool smooth as specified. Apply sealer over sealants in accordance with the sealant manufacturer's printed instructions.

3.5 TESTING

Water Test

For applications where the sealant provides a weather barrier, such as the joints between the tilt up panels, test entire joint using a water hose. Position a spray nozzle a maximum of five feet away and spray the joint directly, simulating a driving rain. No leakage into the building shall be observed. If so, repair or reapply joint sealants.

3.6 PROTECTION AND CLEANING

3.6.1 Protection

Protect areas adjacent to joints from sealant smears. Masking tape may be used for this purpose if removed 5 to 10 minutes after the joint is filled and no residual tape marks remain.

3.6.2 Final Cleaning

Upon completion of sealant application, remove remaining smears and stains and leave the work in a clean and neat condition.

a. Masonry and Other Porous Surfaces: Immediately remove fresh sealant that has been smeared on adjacent masonry, rub clean with a solvent, and remove solvent residue, in accordance with sealant manufacturer's printed instructions. Allow excess sealant to cure for 24 hour then remove by wire brushing or sanding. Remove resulting debris.

b. Metal and Other Non-Porous Surfaces: Remove excess sealant with a solvent moistened cloth. Remove solvent residue in accordance with solvent manufacturer's printed instructions.

-- End of Section --