HERBERT HOOVER DIKE REHABILITATION
STRUCTURE REPLACEMENT

$AFETY PAY$
In Many Ways!

PLANS
FOR CONSTRUCTION OF

S-291 (IP-3) RECONSTRUCTION

GLADES COUNTY, FLORIDA

DEPARTMENT OF THE ARMY
JACKSONVILLE DISTRICT, CORPS OF ENGINEERS
JACKSONVILLE, FLORIDA

2016

TO ACCOMPANY INVITATION
NO. W912EP-16-R-0010

VE "INCREASE PROFIT -- SUBMIT VECP'S"

114527-HHDRCRIP3-GI000.DGN

SAFETY ON THIS JOB DEPENDS ON YOU

HERBERT HOOVER DIKE REHABILITATION STRUCTURE REPLACEMENT

S-291 (IP-3) RECONSTRUCTION

INDEX TO DRAWINGS

DWG NO	TITLE
GENERAL	
G-01	INDEX OF DRAWINGS
G-02	ABBREVIATIONS AND REFERENCE SYMBOLOGY
G-03	SITE ACCESS, CONTROL MARKERS, VICINITY, AND LOCATION MAP
G-04	WORK LIMITS AND BORING LOCATIONS
SURVEY	
V-01	EXISTING CONDITIONS PLAN
CIVIL	
C-01	PHASE I - COFFERDAM PLAN
C-02	PHASE I - COFFERDAM CONTOUR PLAN
C-03	PHASE I - COFFERDAM CROSS SECTIONS
C-04	PHASE I - COFFERDAM ARMORING PLAN AND SECTIONS
C-05	PHASE II - EXCAVATION PLAN
C-06	PHASE II - EXCAVATION CONTOUR PLAN
C-07	PHASE II - EXCAVATION CROSS SECTIONS
C-08	PHASE II - EXCAVATION SEEPAGE PROTECTION PLAN
C-09	PHASE III - STRUCTURE INSTALLATION PLAN
C-10	PHASE III - STRUCTURE INSTALLATION CROSS SECTIONS
C-11	PHASE III - STRUCTURE INSTALLATION DETAILS - DRAINAGE
C-12	PHASE IV PT I - EMBANKMENT & CHANNEL RECONSTRUCTION GRADING PLAN
C-13	PHASE IV PT I - EMBANKMENT & CHANNEL RECONSTRUCTION GRADING PLAN
C-14	PHASE IV PT I - EMBANKMENT & CHANNEL RECONSTRUCTION CONTOUR PLAN
C-15	PHASE IV PT II - EMBANKMENT & CHANNEL RECONSTRUCTION GRADING PLAN
C-16	PHASE IV PT II - EMBANKMENT & CHANNEL RECONSTRUCTION CONTOUR PLAN
C-17	PHASE IV PT III - STEEL SHEET PILE COFFERDAM AND CULVERT ABANDONMENT PLAN
C-18	PHASE IV PT IV - EXISTING CHANNEL BACKFILL SITE PLAN
C-19	PHASE IV PT IV - EXISTING CHANNEL BACKFILL CONTOUR PLAN
C-20	PHASE IV PT V - EMBANKMENT RECONSTRUCTION SITE PLAN
C-21	PHASE IV PT V - EMBANKMENT RECONSTRUCTION CONTOUR PLAN
C-22	PHASE IV - EMBANKMENT AND CHANNEL CROSS SECTIONS AND DETAILS
C-23	PHASE IV EMBANKMENT AND CHANNEL RECONSTRUCTION SURFACING PLAN
C-24	PHASE IV EMBANKMENT RECONSTRUCTION SECTIONS AND DETAILS
C-25	UTILITY SITE PLAN
C-26	DETAILS - BARBED WIRE FENCE
STRUCTURAL	
S-01	GENERAL NOTES
S-02	GENERAL PLAN AND PROFILE
S-03	HEADWALL ELEVATIONS
S-04	FOUNDATION PLAN AND SECTIONS
S-05	FOUNDATION SECTIONS AND DETAILS
S-06	PLAN EL 8.0 AND EL 17.5
S-07	PLAN EL 30.6
S-08	SECTIONS
S-09	SECTIONS
S-10	SECTIONS
S-11	FOUNDATION PLAN AND SECTIONS
S-12	FOUNDATION SECTIONS AND DETAILS
S-13	PLAN EL 8.0 AND EL 17.5
S-14	PLAN EL 30.5
S-15	SECTIONS
S-16	SECTIONS
S-17	SECTIONS
S-18	CONCRETE ENCASEMENT

DWG NO	TITLE
NEXT SECTION	
S-19	CONCRETE ENCASEMENT CONSTRUCTION SEQUENCE
S-20	REINFORCEMENT
S-21	REINFORCEMENT
S-22	REINFORCEMENT
S-23	REINFORCEMENT
S-24	REINFORCEMENT
S-25	REINFORCEMENT
S-26	REINFORCEMENT
S-27	REINFORCEMENT
S-28	REINFORCEMENT
S-29	REINFORCEMENT
S-30	CULVERT REINFORCEMENT
S-31	LANDSIDE HEADWALL SCOUR CUTOFF WALLS
S-31A	LAKESIDE HEADWALL SCOUR CUTOFF WALLS
S-32	LAKESIDE WINGWALL
S-33	LANDSIDE WINGWALL
S-34	REINFORCEMENT
S-35	REINFORCEMENT
S-36	BULKHEAD SLOT DETAILS AND METAL FABRICATIONS
S-37	BULKHEAD SILL AND OPERATING PLATFORM ARMOUR DETAILS
S-38	LAKESIDE HEADWALL FIXTURES
S-39	LANDSIDE HEADWALL FIXTURES
S-40	HEADWALL ACCESSORIES
S-41	RAILING PLAN AND ELEVATION
S-42	LAKESIDE HEADWALL RAILING PLAN AND ELEVATION
S-43	LANDSIDE HEADWALL RAILING PLAN AND ELEVATION
S-44	TYPICAL DETAILS MANATEE SCREEN PLAN AND SECTIONS
S-45	84"x84" COMBINATION GATE. GATE ASSEMBLY ELEVATION AND SECTIONS
S-45A	DUAL LEAF GATE. GATE ASSEMBLY ELEVATION AND SECTIONS
S-46	84"x84" COMBINATION GATE. GATE ASSEMBLY ELEVATION AND SECTIONS
S-47	84"x84" COMBINATION GATE. FRAME ASSEMBLY ELEVATION AND WALL THIMBLE
S-48	84"x84" COMBINATION GATE. FRAME ASSEMBLY ELEVATION AND SECTIONS
S-49	84"x84" SLIDE GATE ASSEMBLY, ELEVATION AND SECTIONS
S-50	84"x84" COMBINATION GATE. SLIDE GATE ASSEMBLY, ELEVATION AND SECTIONS
S-51	84"x84" COMBINATION GATE. FLAP GATE ASSEMBLY
S-52	84"x84" COMBINATION GATE. FLAP GATE PIVOT ARM ASSEMBLY
S-53	TYPICAL CONTROL BUILDING
S-54	MISCELLANEOUS CONCRETE DETAILS
S-55	TYPICAL HANDRAIL DETAILS
S-56	TYPICAL HANDRAIL DETAILS
S-57	RUNG LADDER AND FALL PROTECTION ANCHOR DETAILS
S-58	VERTICAL LADDERS AND SHIP LADDER DETAILS
S-59	REMOVEABLE FALL PRROTECTION COVERS
S-60	SIGN DETAILS
S-61	PHASE I STEEL COFFERDAM PLAN AND DETAILS
S-62	LANDSIDE PHASE IV STEEL COFFERDAM PLAN AND DETAILS
S-63	LAKESIDE PHASE IV STEEL COFFERDAM ELEVATIONS
S-64	STILLING WELL INSTRUMENTATION PLATFORM PLAN AND ELEVATION
S-65	STILLING WELL PLATFORM SECTIONS AND DETAILS
MECHANICAL	
M-01	LAKESIDE HEADWALL STILLING WELL PLAN AND ELEVATION
M-02	LAKESIDE STIILING WELL SECTIONS AND DETAILS
M-03	LAKESIDE STILLING WELL SECTIONS AND SCHEMATIC

DWG NO	TITLE
ELECTRICAL	
E-01	SYMBOL LEGEND
E-02	ABBREVIATIONS AND GENERAL NOTES
E-03	SITE PLAN
E-04	STRUCTURE ELECTRICAL PLAN SHEET 1
E-05	STRUCTURE ELECTRIC PLAN SHEET 2
E-06	OPERATING PLATFORM DETAILS
E-07	CONTROL SCHEMATIC
E-08	CONDUIT AND CIRCUIT SCHEDULES
E-09	ELECTRICAL DETAILS SHEET 1
E-10	ELECTRICAL DETAILS SHEET 2
E-11	ELECTRICAL DETAILS SHEET 3
E-12	LANDSIDE CULVERT GATE ELECTRICAL PLAN
E-13	LANDSIDE OPERATING PLATFORM DETAILS
E-14	LANDSIDE CONTROL SCHEMATIC SHEET 1
E-15	LANDSIDE CONTROL SCHEMATIC SHEET 2
TELECOMMUNICATIONS	
T-01	SCADA LEGEND AND SYMBOLS
T-02	SUTRON SYSTEM MONITORING DIAGRAM
T-03	SSUTRON SYSTEM COMPONETS
T-04	SUTRON PANEL WIRING DIAGRAM SHEET 1
T-05	SUTRON PANEL WIRING DIAGRAM SHEET 2
T-06	ANTENNA POLE DETAILS
T-07	CAMERA POLE DETAILS
T-08	INCLINOMETER INSTALLATION DETAILS
T-09	INCLINOMETER DETAILS
T-10	RTU BRACKET
RESOURCE	
R-01	HP_CULVERT_SHEET_1_DO_463-25,182-1
R-02	HP_CULVERT_SHEET_2_DO_463-25,182-1
R-03	HP_CULVERT_SHEET_3_DO_463-25,182-1

US Army Corps of Engineers
Jacksonville District

No.	SYM	ZONE	DESCRIPTION

DEPARTMENT OF THE ARMY
CORPS OF ENGINEERS
JACKSONVILLE DISTRICT
JACKSONVILLE, FLORIDA

DESIGNED BY: M.J.B. | DATE: JANUARY 2015
DWN BY: M.J.B. | CKD BY: E.G.M. | SOLICITATION NO.: W912EP-16-R-0010
SUBMITTED BY: N/A | CONTRACT NO.: N/A
PLOT SCALE: AS SHOWN | PLOT DATE: Apr 25, 2016 | FILE NUMBER: N/A
FILE NAME: 114527-HHDRCRIP1-GI001.DGN

HERBERT HOOVER DIKE REHABILITATION PROJECT
STRUCTURE REPLACEMENTS
S-291 (IP-3) RECONSTRUCTION
GENERAL
INDEX OF DRAWINGS

DRAWING NO.
G-01

GI001.DGN

pw:\\COE-SAJPWP02\JAX.saj.ds.usace.army.mil:SAJPW\Documents\C&SF\Herbert Hoover Dike Rehabilitation\03-Culvert Rehabilitation\S-292(IP-1), S-290(IP-2), S-291(IP-3) Culvert Reconstruction\070 - Plans\IP-3\01 General\G-01

SAFETY ON THIS JOB DEPENDS ON YOU

DRAWING SET TABLE OF CONTENTS

G - GENERAL
V - SURVEY/MAPPING
B - GEOTECHNICAL
C - CIVIL
S - STRUCTURAL
A - ARCHITECTURAL
Q - EQUIPMENT
F - FIRE PROTECTION
M - MECHANICAL
E - ELECTRICAL
T - TELECOMMUNICATIONS

INDENTITY SYMBOL KEY

14 OR 14 — KEYNOTE INDICATOR
A — DRAWING REVISION INDICATOR
℄ — OBJECT CENTERLINE IDENTIFIER
@ — AT
X^ — DEGREE(S)
X" — INCHES
X'-X" — FEET-INCHES
= — EQUAL TO
— NUMBER
% — PERCENT
EL 45.0 — ELEVATION DATUM INDICATOR

TERMS AND ABBREVIATIONS

A/E	ARCHITECT/ENGINEER
ABAN	ABANDON
ABNL	ABNORMAL
ACI	AMERICAN CONCRETE INSTITUTE
ACR	ACROSS
ADDL	ADDITIONAL
ADDM	ADDENDUM
AI	ASPHALT INSTITUTE
AISC	AMERICAN INSTITUTE OF STEEL CONSTRUCTION
ALLOW	ALLOWANCE
ALNMT	ALIGNMENT
ALT	ALTERNATE
ANSI	AMERICAN NATIONAL STANDARDS INSTITUTE
APPD	APPROVED
APPROX	APPROXIMATE
APPX	APPENDIX
AR	AS REQUIRED
ASCE	AMERICAN SOCIETY OF CIVIL ENGINEERS
ASME	AMERICAN SOCIETY OF MECHANICAL ENGINEERS
ASSY	ASSEMBLY
ASTM	AMERICAN SOCIETY FOR TESTING AND MATERIALS
ASYM	ASYMMETRICAL
AVG	AVERAGE
AWG	AMERICAN WIRE GAUGE
AWWA	AMERICAN WATER WORKS ASSOCIATION
BLDG	BUILDING
BLKHD	BULKHEAD
BLW	BELOW
BOT	BOTTOM
BTWN	BETWEEN
CL	CENTERLINE
CLR	CLEAR
CONC	CONCRETE
COR	CONTRACTING OFFICER
CRSI	CONCRETE REINFORCING STEEL INSTITUTE
CSI	CONSTRUCTION SPECIFICATIONS INSTITUTE
CTR	CENTER
CTRL	CONTROL
CU FT	CUBIC FEET
CU YD	CUBIC YARD
DEG	DEGREE
DEMO	DEMOLITION
DET	DETAIL
DIA	DIAMETER
DIAG	DIAGONAL
DWG	DRAWING
EA	EACH
EL	ELEVATION
Elev.	ELEVATION
EQ	EQUAL
EQUIP	EQUIPMENT
EST	ESTIMATE
FDOT	FLORIDA DEPARTMENT OF TRANSPORTATION
FIG	FIGURE
FS	FEDERAL SPECIFICATION
FT	FEET/FOOT
GOVT	FEDERAL GOVERNMENT
HCP	HANDICAPPED
HDPE	HIGH DENSITY POLYETHYLENE
HMMA	HOLLOW METAL DOOR MANUFACTURERS ASSOCIATION
HORIZ	HORIZONTAL
HT	HEIGHT
ID	INSIDE DIAMETER
IN-LB	INCH POUND
INV	INVERT
INV EL	INVERT ELEVATION
IP	IRON PIPE
IPS	IRON PIPE SIZE
IR	INSIDE RADIUS
L	ANGLE
LBF	POUND FORCE
LBS	POUNDS
LF	LINEAR FOOT
LRG	LARGE
MATL	MATERIAL
MAX	MAXIMUM
MIN	MINIMUM
MSL	MEAN SEA LEVEL
NEC	NATIONAL ELECTRIC CODE
NFPA	NATIONAL FIRE PROTECTION ASSOCIATION
NIBS	NATIONAL INSTITUTE OF BUILDING SCIENCES
NIC	NOT IN CONTRACT
NO.	NUMBER
NOM	NOMINAL
NORM	NORMAL
N.T.S.	NOT TO SCALE
OA	OVERALL
OCON	CENTER
OD	OUTSIDE DIAMETER
OPP	OPPOSITE
PN	PART NUMBER
PR	PAIR
PROJ	PROJECT
PROP	PROPERTY
QTY	QUANTITY
R	RADIUS
RECP	ROLLED EROSION CONTROL PRODUCT
REF	REFERENCE
REQD	REQUIRED
REV	REVISION
RFI	REQUEST FOR INFORMATION
SP EL	SPOT ELEVATION
SPEC	SPECIFICATION
SQ	SQUARE
SQ FT	SQUARE FEET
SST	STAINLESS STEEL
SYM	SYMBOL
SYMM	SYMMETRICAL
SYS	SYSTEM
TYP	TYPICAL
UGD	UNDERGROUND
W/	WITH
W/O	WITHOUT
WP	WORKING POINT

LINE SYMBOL KEY

Ex

- SS — WASTE LINE, SANITARY
- POTABLE COLD WATER
- A — COMPRESSED AIR
- C — COMMUNICATION, OVERHEAD
- COMMUNICATION, UNDERGROUND
- CONSTRUCTION LIMITS
- CP — CULVERT
- DEMOLITION/REMOVAL
- DITCH
- E — ELECTRICAL PRIMARY, OVERHEAD
- E — ELECTRICAL PRIMARY, UGD
- ES — ELECTRICAL SECONDARY, OVERHEAD
- ES — ELECTRICAL SECONDARY, UGD
- X — FENCE
- FO — FIBER OPTIC, UNDERGROUND
- FOR — FUEL OIL RETURN
- FOS — FUEL OIL SUPPLY
- GUARDRAIL
- POTABLE HOT WATER
- LPG — LPG SUPPLY
- W — WATER MAIN
- NPW — NONPOTABLE WATER SUPPLY
- R/W — RIGHT-OF-WAY
- PL — PROPERTY LINE
- OBJECT CENTERLINE

(TSAEC.RSC ~ LINE STYLES ARE RELATIVE)

MATERIAL SYMBOL KEY

- CAST-IN-PLACE CONCRETE (CONCST)
- BEDDING MATERIAL (GRVSCL)
- ROLLER COMPACTED CONCRETE (CCBSS, 90^)
- PRECAST CONCRETE (CONCLW)
- SOIL BENTONITE FILL
- GRAVEL (GRAVEL)
- COMPACTED FILL (EARTH)
- RIPRAP (RIPRAP)
- COBBLES (POROUS)
- EXISTING SOIL (EARTH, 45^)
- ROCK (ROCK)
- SELECT FILL
- DRAINAGE BLANKET /FDM (GRVCRE)
- FILTER SAND (TERRZO)

REFERENCE SYMBOL KEY

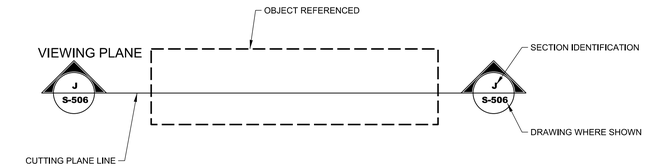

FULL SECTION
REDUCED TO FIT

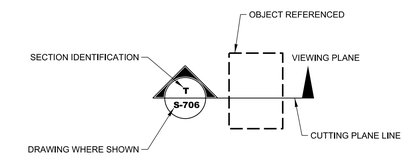

PARTIAL SECTION
REDUCED TO FIT

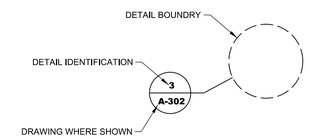

DETAIL INDICATOR
REDUCED TO FIT

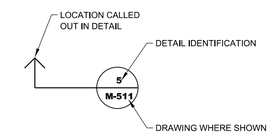

SMALL CONDITIONS DETAIL INDICATOR
REDUCED TO FIT

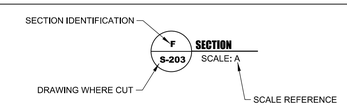

SECTION TITLE
REDUCED TO FIT

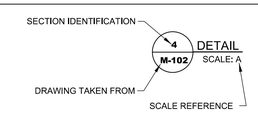

DETAIL TITLE
REDUCED TO FIT

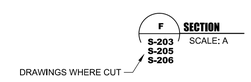

SECTION TITLE W/ MULTIPLE CALLOUTS
REDUCED TO FIT

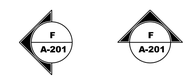

EXTERIOR ELEVATION
REDUCED TO FIT

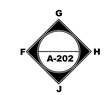

INTERIOR ELEVATIONS WITH MULTIPLE VIEWS
REDUCED TO FIT

INTERIOR ELEVATION
REDUCED TO FIT

PLAN
SCALE: A
SCALE REFERENCE

DRAWING TITLE (TYP)
REDUCED TO FIT

EMBANKMENT TYPICAL SECTION

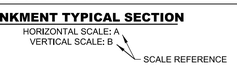

DRAWING TITLE WITH ASYMETRICAL SCALES
REDUCED TO FIT

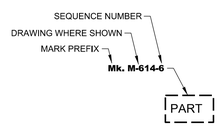

MARK No. CALLOUT
REDUCED TO FIT

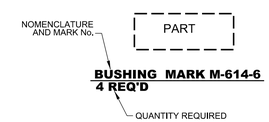

MARK TITLE
REDUCED TO FIT

US Army Corps of Engineers
Jacksonville District

No.	SYM	ZONE	DESCRIPTION

DEPARTMENT OF THE ARMY
CORPS OF ENGINEERS
JACKSONVILLE DISTRICT
JACKSONVILLE, FLORIDA

DESIGNED BY: M.J.B. | DATE: JANUARY 2015
DWN BY: M.J.B. | CKD BY: E.G.M. | SOLICITATION NO.: W912EP-16-R-0010
SUBMITTED BY: N/A | CONTRACT NO.: N/A
PLOT SCALE: AS SHOWN | PLOT DATE: Apr 25, 2014 | FILE NUMBER: N/A
FILE NAME: 114527-HHDRCRIP3-GI002.DGN

HERBERT HOOVER DIKE REHABILITATION PROJECT
STRUCTURE REPLACEMENTS
S-291 (IP-3) RECONSTRUCTION
GENERAL
ABBREVIATIONS AND REFERENCE SYMBOLOGY

DRAWING NO.
G-02

pw:\\COE-SAJ\PW\P02\JAX.saj.ds.usace.army.mil:SAJPW\Documents\C&SF\Herbert Hoover Dike Rehabilitation\03-Culvert Rehabilitation\S-292(IP-1), S-290(IP-2), S-291(IP-3) Culvert Reconstruction\070 - Plans\IP-3\01 General\G-02

SAFETY ON THIS JOB DEPENDS ON YOU

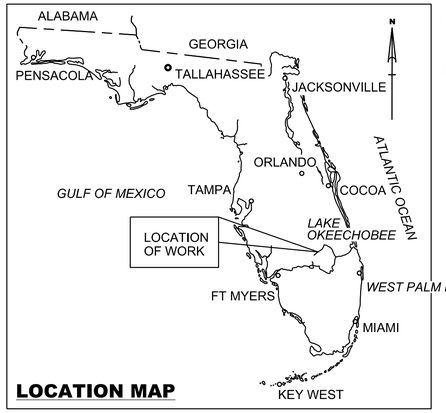

LOCATION MAP

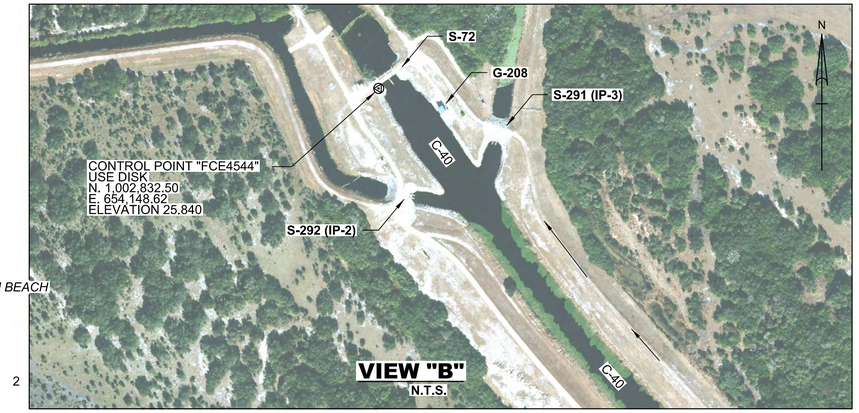

VIEW "B"
N.T.S.

VIEW "A"
N.T.S.

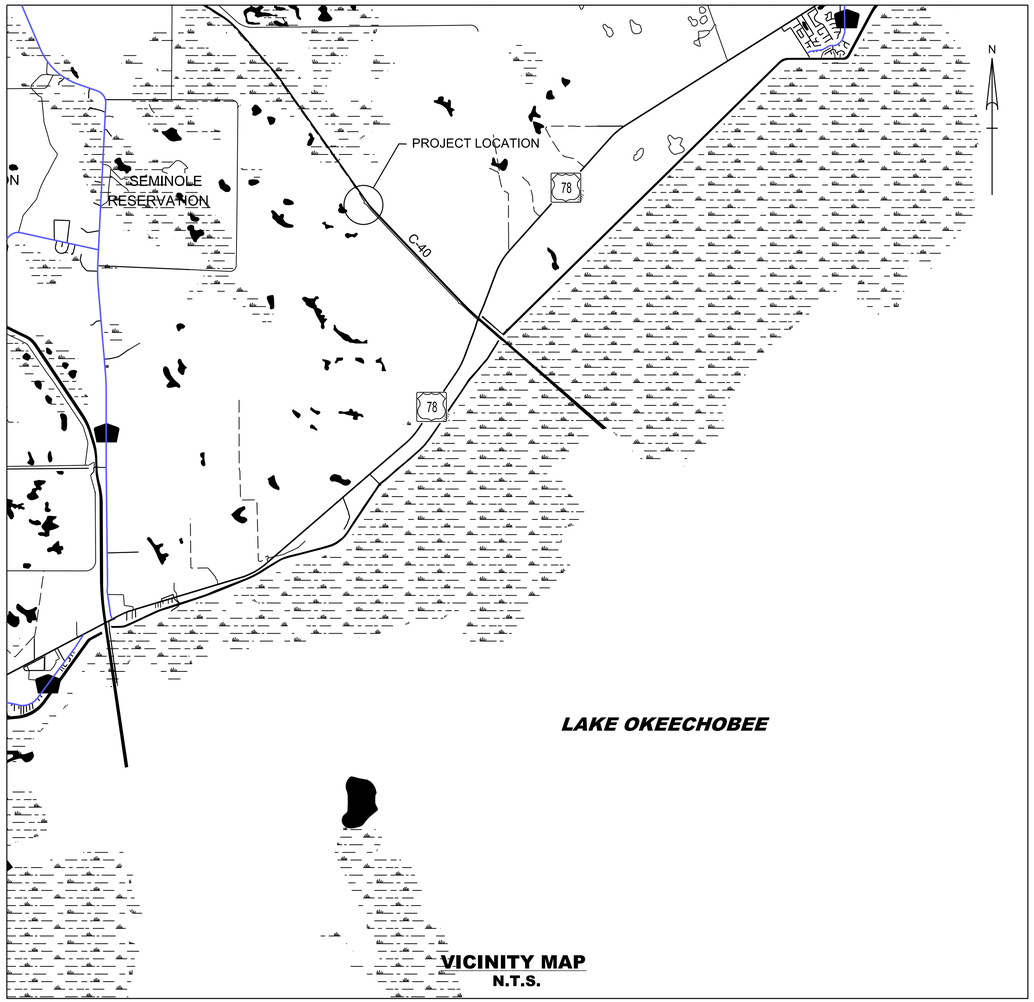

VICINITY MAP
N.T.S.

NOTE:
CONTRACTOR TO PROVIDE TRAFFIC CONTROL FOR VEHICULAR ACCESS AT THE INTERSECTION OF STATE ROAD 78 AND PROJECT ENTRANCE IN ACCORDANCE WITH EM-385-1-1. ANY ACCELERATION AND DECELERATION LANES ON SR-78 SHALL COMPLY WITH STATE AND LOCAL REQUIREMENTS

US Army Corps of Engineers
Jacksonville District

No.	SYM	ZONE	DESCRIPTION

DESIGNED BY: M.J.B.
DWN BY: M.J.B.
CKD BY: E.G.M.
SUBMITTED BY: N/A
DATE: JANUARY 2015
SOLICITATION NO.: W912EP-16-R-0010
CONTRACT NO.: N/A
PLOT SCALE: N/A
PLOT DATE: Apr 25, 2016
FILE NUMBER: N/A
FILE NAME: 114527-HHDRCRIP3-GI003.DGN

DEPARTMENT OF THE ARMY
CORPS OF ENGINEERS
JACKSONVILLE DISTRICT
JACKSONVILLE, FLORIDA

HERBERT HOOVER DIKE REHABILITATION PROJECT
STRUCTURE REPLACEMENTS

S-291 (IP-3) RECONSTRUCTION

GENERAL

SITE ACCESS, CONTROL POINTS, VICINITY, AND LOCATION MAP

DRAWING NO.
G-03

pw:\\COE-SAJPWP02\IAX.saj.ds.usace.army.mil:SAJPW\Documents\C&SF\Herbert Hoover Dike Rehabilitation\03-Culvert Reconstruction\S-292(IP-1), S-290(IP-2), S-291(IP-3) Culvert Reconstruction\070 - Plans\IP-3\01 General\G-03

SAFETY ON THIS JOB DEPENDS ON YOU

NOTES:

1. ALL WORK SHALL BE PERFORMED WITHIN THE CONSTRUCTION WORK LIMITS.
2. ANY EXCESS QUANTITIES OF RIPRAP SHALL BE STOCK-PILED . STORAGE / STAGING AREA IS APPROXIMATE ONLY. CONTRACTOR SHALL STORE RIPRAPWITHIN THE WORK LIMITS.
3. SEE SHEETS R-01 THROUGH R-03 FOR CULVERT IP-3 AS-BUILT DRAWINGS.
4. TEMPORARY CONSTRUCTION ACCESS RAMPS SHALL HAVE 2' WIDE GRAVEL SHOULDERS AND HAVE MINIMUM TIE IN SLOPES OF 1V : 3H.
5. CONTRACTOR SHALL REMOVE ANY EXISTING CATTLE FENCE THAT'S WITHIN THE WORKING LIMITS, CONTRACTOR SHALL THEN PLACE NEW CATTLE FENCE ALONG THE RIGHT-OF-WAY AND TIE INTO EXISTING FENCE. SEE DRAWING C-26 FOR BARBED WIRE FENCE. THE BARBED WIRE FENCE SHALL REMAIN THROUGHOUT THE CONTRACT.

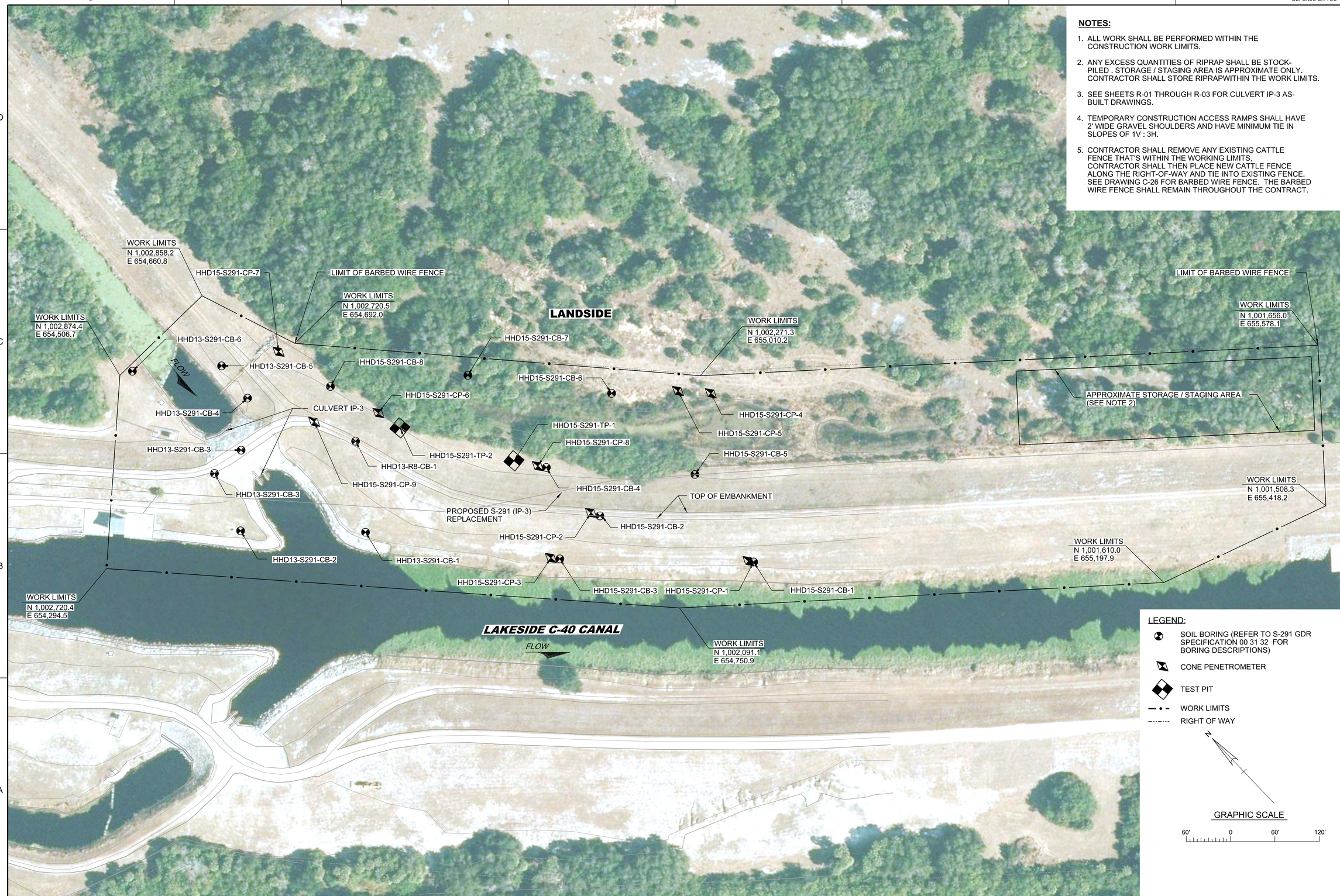

LEGEND:

- SOIL BORING (REFER TO S-291 GDR SPECIFICATION 00 31 32 FOR BORING DESCRIPTIONS)
- CONE PENETROMETER
- TEST PIT
- WORK LIMITS
- RIGHT OF WAY

N

GRAPHIC SCALE

60' 0 60' 120'

US Army Corps of Engineers, Jacksonville District

No.	STM	ZONE	DESCRIPTION
N	A-N	ABCD...	

DEPARTMENT OF THE ARMY
CORPS OF ENGINEERS
JACKSONVILLE DISTRICT
JACKSONVILLE, FLORIDA

DESIGNED BY: M.J.B.	DATE: SEPTEMBER 2015
DWN BY: M.J.B.	CKD BY: E.G.M.
SOLICITATION NO.: W912EP-16-R-0010	
SUBMITTED BY: N/A	CONTRACT NO.: N/A
PLOT SCALE: N/A	PLOT DATE: Apr 25, 2016
FILE NUMBER: N/A	
FILE NAME: 114527-HHDRCRIP3-GI004.DGN	

HERBERT HOOVER DIKE REHABILITATION PROJECT
STRUCTURE REPLACEMENTS

S-291 (IP-3) RECONSTRUCTION

GENERAL

WORK LIMITS AND BORING LOCATIONS

DRAWING NO.

G-04

pw:\\COE-SAJPWP02JAX.saj.ds.usace.army.mil:SAJPW\Documents\C&SF\Herbert Hoover Dike Rehabilitation\03-Culvert Reconstruction\070 - Plans\IP-3\01 General\G-04

SAFETY ON THIS JOB DEPENDS ON YOU

SURVEY NOTES:

1. HORIZONTAL COORDINATES ARE REFERENCED TO THE NORTH AMERICAN DATUM OF 1983 (2011), FLORIDA STATE PLANE COORDINATE SYSTEM, FLORIDA EAST ZONE, US SURVEY FEET. NGS COORDINATES WERE USED TO CONTROL THE SURVEY. THE COORDINATES WERE ESTABLISHED FROM STATIC GPS OBSERVATIONS AND PROCESSING THROUGH THE NATIONAL GEODETIC SURVEYS OPUS WEBSITE.
2. ELEVATIONS ARE REFERENCED TO THE NORTH AMERICAN VERTICAL DATUM OF 1988 (NAVD88) US SURVEY FEET.
3. PROJECT CONTROL:

PIDName	Northing	Easting	Elevation (NAVD88)
AE6412A	438991436.90	665038.58	31.15
AE6418F	4381019800.SC	638980.SC	28.02
AE6414FCE	45441002830.SC	654150.SC	25.84
AJ6177M	5231000461.45	674201.04	32.16
AE6398P	437996190.SC	619520.SC	25.43
AJ6181R	523981831.98	657814.60	32.70
AF6695W	3571057658.84	668843.24	30.42

NOTE: COORDINATES DENOTED WITH ".SC" ARE SCALED VALUES AND ARE NOT TO BE USED FOR HORIZONTAL CONTROL VALUES.

4. A HYDROGRAPHIC SURVEY UTILIZING SINGLE-BEAM SONAR OF INDIAN PRAIRIE / C-40 CANAL WITHIN THE PROJECT LIMITS WAS CONDUCTED. RTK WAS UTILIZED FOR HORIZONTAL AND VERTICAL POSITIONING OF ALL HYDROGRAPHIC DATA ACQUISITION.
5. SINGLE BEAM HYDROGRAPHIC DATA WAS COLLECTED UTILIZING HIGH FREQUENCY (200 KHZ).
6. TO EXPLORE FOR THE PRESENCE OF SOFT AND/OR UNSUITABLE SOILS, MUCK PROBES WERE PERFORMED. THE MUCK PROBES WERE CONDUCTED BY HAND PUSHING A 1"DIAMETER RANGE POLE INTO THE GROUND UNTIL PENETRATION WAS REFUSED ALONG EACH HYDROGRAPHIC CROSS SECTION WITHIN PRE DEFINED AREAS ADJACENT TO THE STRUCTURE.
7. FIELD DATA COLLECTED BETWEEN 22 JUNE 2013 AND 28 JULY 2013.
8. REFER TO SURVEY 13-078.

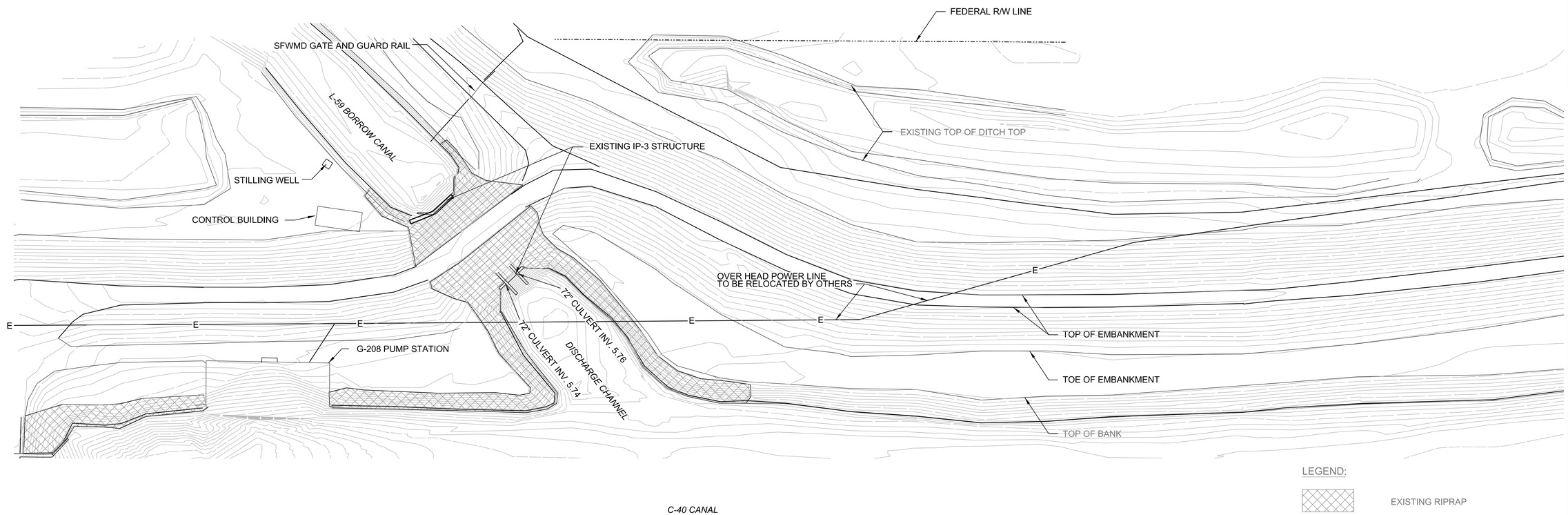

LEGEND:

EXISTING RIPRAP

N

GRAPHIC SCALE

40' 0 40' 80'

US Army Corps of Engineers
Jacksonville District

No.	SYM	ZONE	DESCRIPTION

DEPARTMENT OF THE ARMY
CORPS OF ENGINEERS
JACKSONVILLE DISTRICT
JACKSONVILLE, FLORIDA

DESIGNED BY: M.J.B.
DATE: JANUARY 2015
DWN BY: M.J.B.
CKD BY: E.G.M.
SOLICITATION NO.: W912EP-16-R-0010
SUBMITTED BY: N/A
CONTRACT NO.: N/A
PLOT SCALE: N/A
PLOT DATE: Apr 25, 2014
FILE NUMBER: N/A
FILE NAME: 114527-HHDRCRIP3-VF101.DGN

HERBERT HOOVER DIKE REHABILITATION PROJECT
STRUCTURE REPLACEMENTS

S-291 (IP-3) RECONSTRUCTION

SURVEY

EXISTING CONDITIONS PLAN

DRAWING NO.

V-01

pw:\\COE-SAJPWP02JAX.saj.ds.usace.army.mil:SAJPW\Documents\C&SF\Herbert Hoover Dike Rehabilitation\03-Culvert Rehabilitation\S-292(IP-1), S-290(IP-2), S-291(IP-3) Culvert Reconstruction\070 - Plans\IP-3\03 Survey Mapping\V-01

SAFETY ON THIS JOB DEPENDS ON YOU

NOTES:

1. ELEVATIONS ARE IN FEET AND TENTHS AND REFER TO NORTH AMERICAN VERTICAL DATUM 1988 (NAVD).
2. EXISTING RIPRAP REMOVED TO ACCOMMODATE CONSTRUCTION TO BE STOCKPILED ON SITE. SEE SHEET G-04 FOR STORAGE / STAGING AREA.
3. NO PORTION OF THE EXISTING EMBANKMENT SHALL BE DEGRADED OR EXCAVATED UNTIL THE COFFERDAM SYSTEMS ARE IN PLACE, COMPLETE AND APPROVED BY THE COR. THE EMBANKMENT SHALL NOT BE DEGRADED OUTSIDE THE LIMITS OF THE EARTHEN COFFERDAM.
4. REMOVE AND STORE EXISTING GUARDRAIL, FENCE, AND GATE IMPACTED BY S-291 CONSTRUCTION.
5. CONTRACTOR SHALL PROVIDE A TURBIDITY CONTROL AND MONITORING PLAN, INCLUDING TURBIDITY BARRIERS PER THE SPECIFICATIONS.
6. REFER TO STRUCTURAL DRAWINGS FOR ELEVATIONS OF LAKE SIDE STEEL SHEET PILE COFFERDAM.
7. CONTRACTOR SHALL SALVAGE GATE AND REMOVE GUARD RAIL.

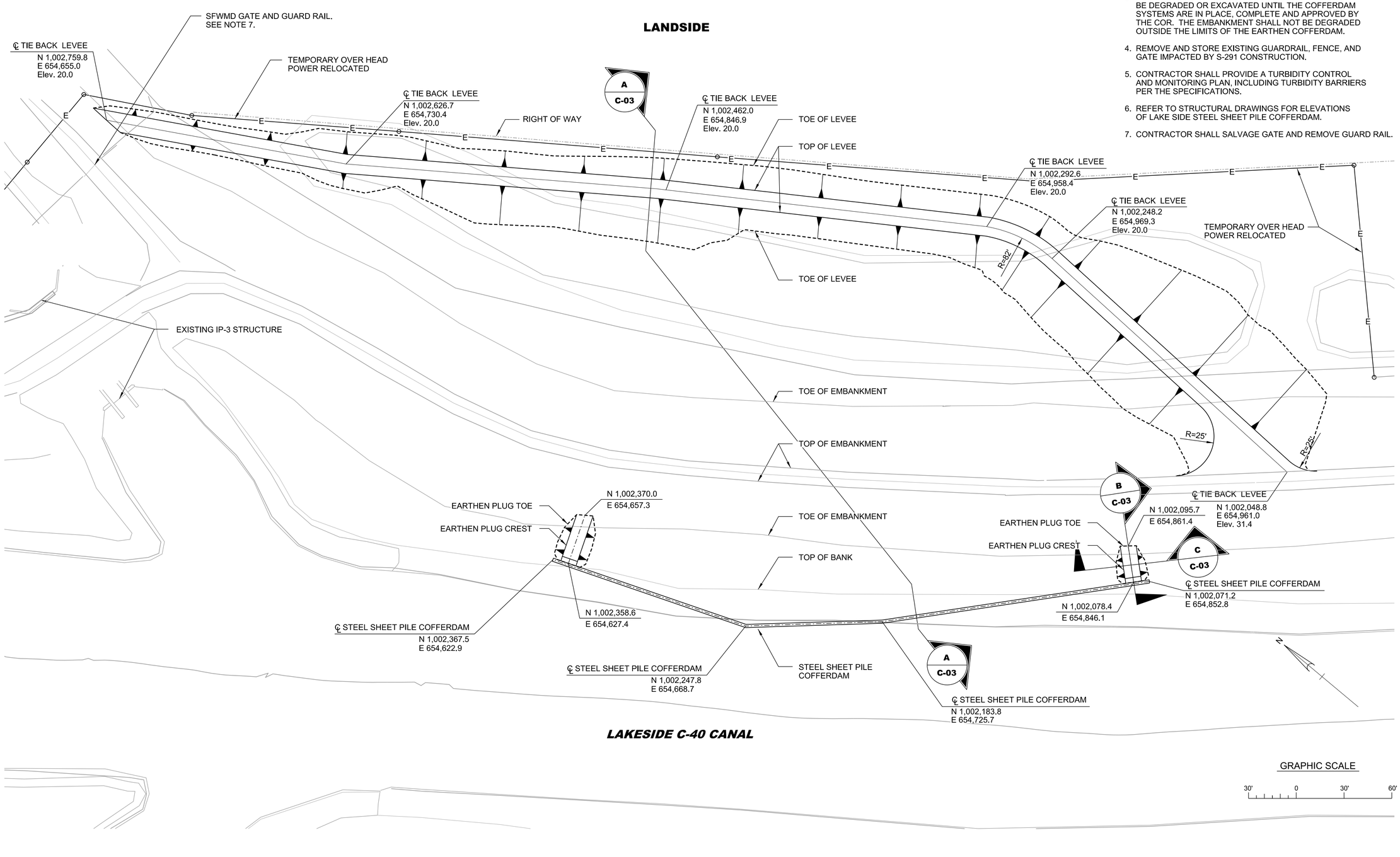

US Army Corps of Engineers
Jacksonville District

No.	SYM	ZONE	DESCRIPTION
N	A-N	ABCD...	

DEPARTMENT OF THE ARMY
CORPS OF ENGINEERS
JACKSONVILLE DISTRICT
JACKSONVILLE, FLORIDA

DESIGNED BY: M.J.B.
DWN BY: M.J.B.
CKD BY: E.G.M.
SUBMITTED BY: N/A
PLOT SCALE: AS SHOWN
PLOT DATE: Apr 25, 2014
DATE: DWG BEGUN DATE N/A
SOLICITATION NO.: W912EP-16-R-0010
CONTRACT NO.: N/A
FILE NUMBER: N/A
FILE NAME: 114527-HHDRCRIP3-CF101

HERBERT HOOVER DIKE REHABILITATION PROJECT
STRUCTURE REPLACEMENTS

S-291 (IP-3) RECONSTRUCTION

CIVIL

PHASE I COFFERDAM PLAN

DRAWING NO.

C-01

pw:\\COE-SAJ\PW\P02\JAX.saj.ds.usace.army.mil:SAJ\PW\Documents\C&SF\Herbert Hoover Dike Rehabilitation\03-Culvert Rehabilitation\S-292(IP-1), S-290(IP-2), S-291(IP-3) Culvert Reconstruction\070 - Plans\IP-3\05 Civil\C-01

SAFETY ON THIS JOB DEPENDS ON YOU

NOTES:

1. ELEVATIONS ARE IN FEET AND TENTHS AND REFER TO NORTH AMERICAN VERTICAL DATUM 1988 (NAVD).
2. PROPOSED CONTOURS ARE SHOWN IN BOLD, EXISTING CONTOURS ARE SHOWN IN DASHED.
3. NO PORTION OF THE EXISTING EMBANKMENT, EXCEPT SURFACE TREATMENTS SHALL BE DEGRADED OR EXCAVATED UNTIL THE COFFERDAM SYSTEMS ARE IN PLACE, COMPLETE, AND APPROVED BY THE COR. THE EMBANKMENT SHALL NOT BE DEGRADED OUTSIDE THE LIMITS OF THE COFFERDAM.
4. CONTRACTOR SHALL PROVIDE A TURBIDITY CONTROL AND MONITORING PLAN, INCLUDING TURBIDITY BARRIERS PER THE SPECIFICATIONS.

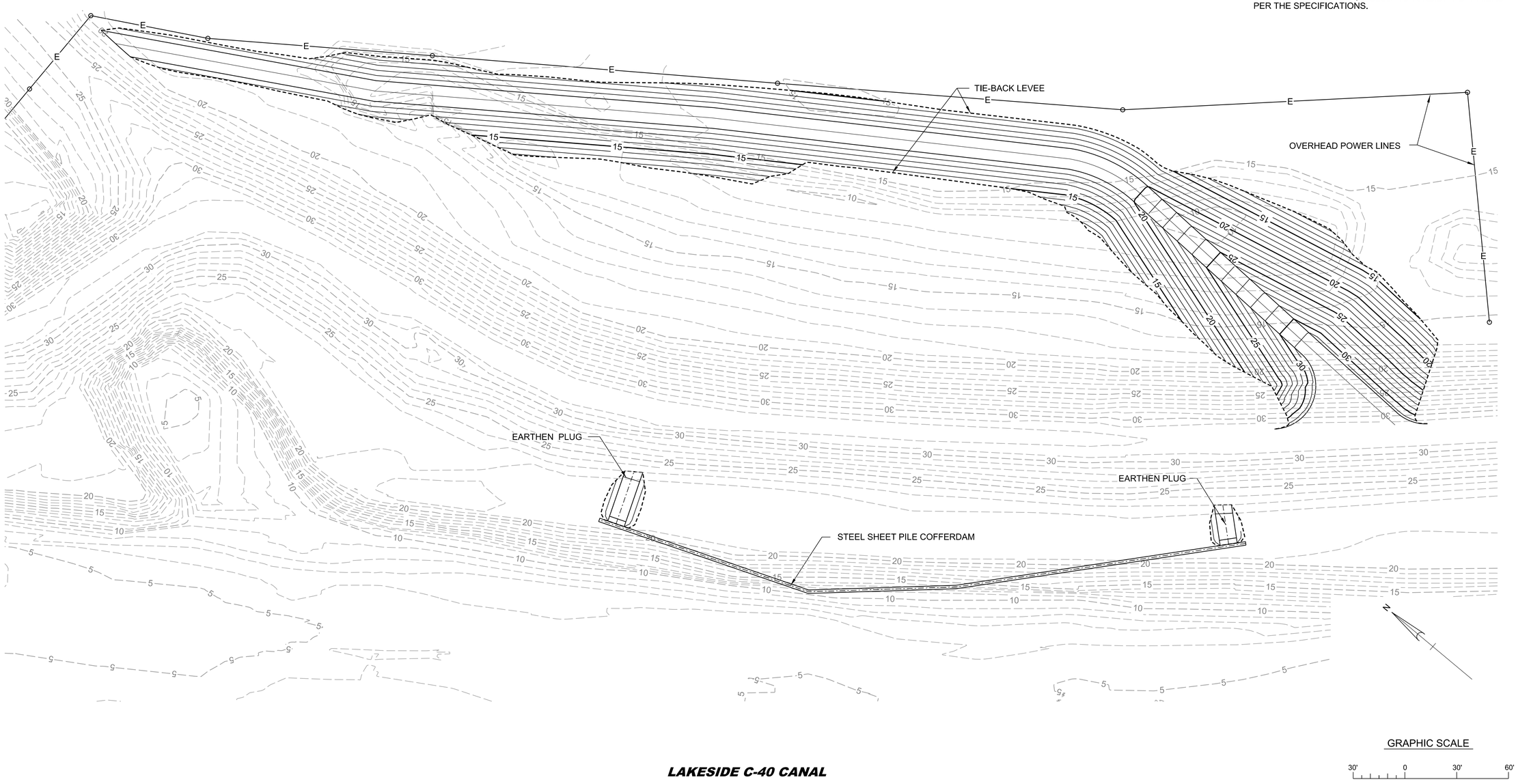

US Army Corps of Engineers
Jacksonville District

No.	SYM	ZONE	DESCRIPTION
N	A-N	ABCD...	

DESIGNED BY: M.J.B.
DWN BY: M.J.B.
CKD BY: E.G.M.
SUBMITTED BY: N/A
PLOT SCALE: N/A
PLOT DATE: Apr 25, 2014
FILE NUMBER: N/A
FILE NAME: 114527-HHDRCRIP3-CF102.DGN
DATE: SEPTEMBER 2015
SOLICITATION NO.: W912EP-16-R-0010
CONTRACT NO.: N/A

DEPARTMENT OF THE ARMY
CORPS OF ENGINEERS
JACKSONVILLE DISTRICT
JACKSONVILLE, FLORIDA

HERBERT HOOVER DIKE REHABILITATION PROJECT
STRUCTURE REPLACEMENTS

S-291 (IP-3) RECONSTRUCTION

CIVIL

PHASE I COFFERDAM CONTOUR PLAN

DRAWING NO.

C-02

pw:\\COE-SAJ\PWP02JAX.saj.ds.usace.army.mil:SAJ\PW\Documents\C&SF\Herbert Hoover Dike Rehabilitation\03-Culvert Reconstruction\S-292(IP-1), S-290(IP-2), S-291(IP-3) Culvert Reconstruction\070 - Plans\IP-3\05 Civil\C-02

SAFETY ON THIS JOB DEPENDS ON YOU

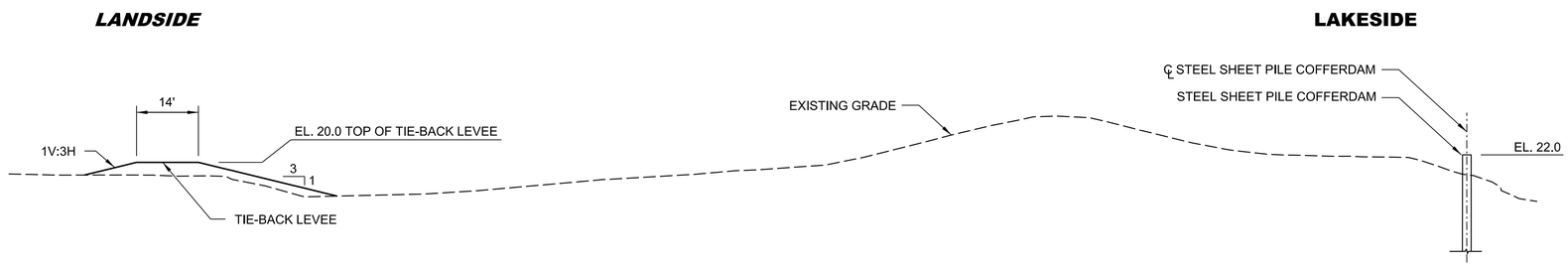

A / C-01 **SECTION**
SCALE: A

NOTES:

1. ELEVATIONS ARE IN FEET AND TENTHS AND REFER TO NORTH AMERICAN VERTICAL DATUM 1988 (NAVD).
2. CONTRACTOR SHALL PROVIDE A TURBIDITY CONTROL AND MONITORING PLAN, INCLUDING TURBIDITY BARRIERS PER THE SPECIFICATIONS.
3. REFER TO SPECIFICATIONS FOR OPERATIONAL AND HISTORICAL RANGE OF WATER LEVELS IN LAKE OKEECHOBEE / C-40.
4. REFER TO SPECIFICATION 00 33 50 FOR OPERATIONAL WATER LEVELS LANDSIDE OF STRUCTURE.
5. REFER TO STRUCTURAL DRAWINGS FOR ELEVATIONS OF LAKESIDE STEEL SHEET PILE COFFERDAM.
6. REFER TO SPECIFICATIONS FOR PLACEMENT OF FILL IN WET AREAS. SELECT FILL TO 2 FEET ABOVE WATER, THEN TRANSITION TO EMBANKMENT FILL.

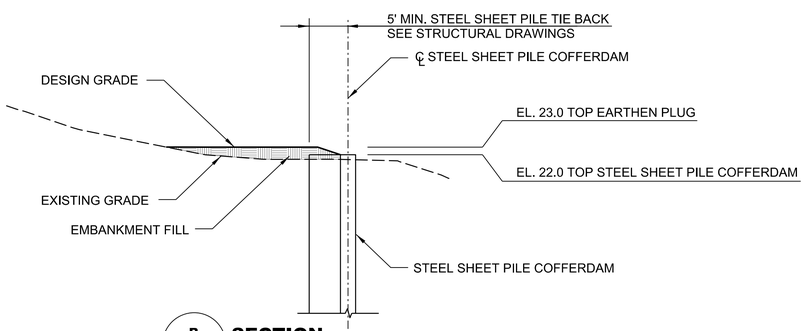

B / C-01 **SECTION**
SCALE: B

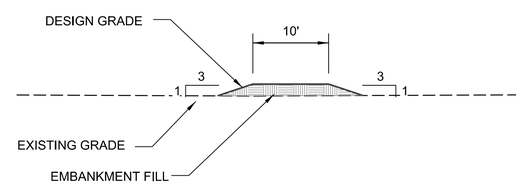

C / C-01 **SECTION**
SCALE: B

A 20' 0 20' 40'

B 10' 0 10' 20'

US Army Corps of Engineers
Jacksonville District

No.	SYM	ZONE	DESCRIPTION
N	A	A-N	ABCD...

DEPARTMENT OF THE ARMY
CORPS OF ENGINEERS
JACKSONVILLE DISTRICT
JACKSONVILLE, FLORIDA

DESIGNED BY: M.J.B.	DATE: SEPTEMBER 2015
DWN BY: M.J.B.	CKD BY: E.G.M.
SOLICITATION NO.: W912EP-16-R-0010	
SUBMITTED BY: N/A	CONTRACT NO.: N/A
PLOT SCALE: As shown	PLOT DATE: Apr 25, 2016
FILE NUMBER: N/A	
FILE NAME: 114527-HHDRCRIP3-CF303.DGN	

HERBERT HOOVER DIKE REHABILITATION PROJECT
STRUCTURE REPLACEMENTS

S-291 (IP-3) RECONSTRUCTION

CIVIL

PHASE I - COFFERDAM CROSS SECTIONS

DRAWING NO.
C-03

pw:\\COE-SAJPWP02JAX.saj.ds.usace.army.mil:SAJPW\Documents\C&SF\Herbert Hoover Dike Rehabilitation\03-Culvert Rehabilitation\S-292(IP-1), S-290(IP-2), S-291(IP-3) Culvert Reconstruction\070 - Plans\IP-3\05 Civil\C-03

SAFETY ON THIS JOB DEPENDS ON YOU

NOTES:

1. ELEVATIONS ARE IN FEET AND TENTHS AND REFER TO NORTH AMERICAN VERTICAL DATUM 1988 (NAVD)

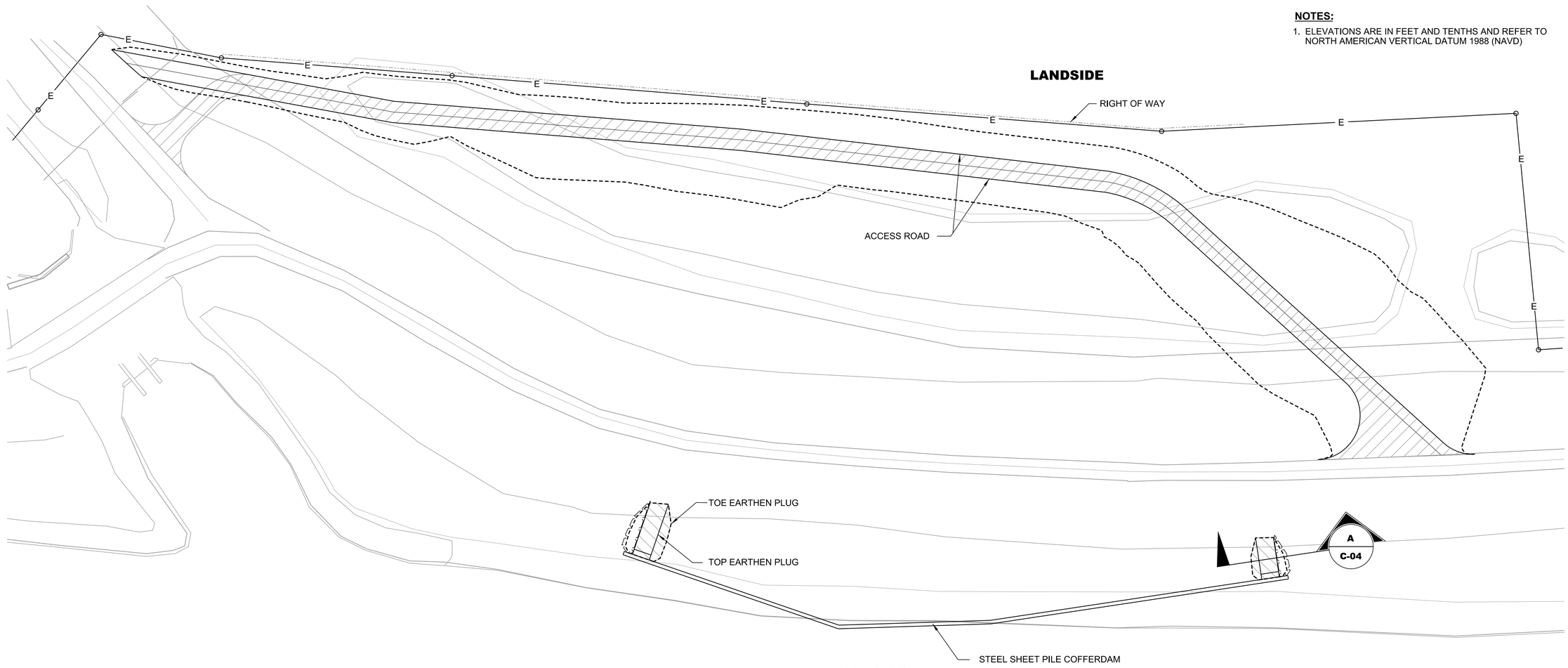

LEGEND

- IMPORT RIPRAP
- 6" BEDDING STONE OVER GEOTEXTILE
- 6" LIME ROCK

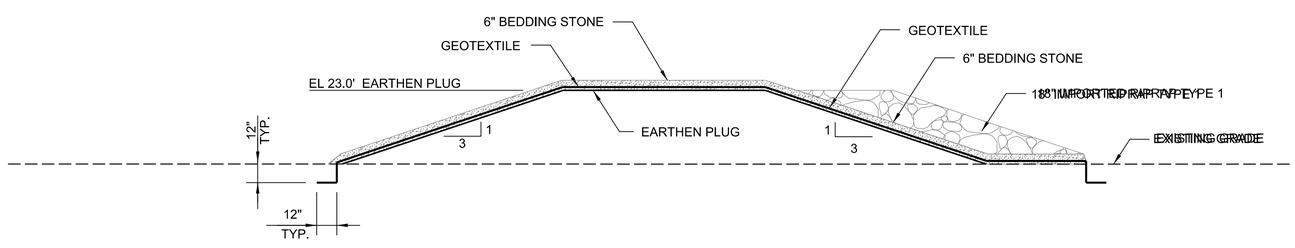

A / C-04 **LAKESIDE EARTHEN PLUG CROSS SECTION**

N.T.S.

GRAPHIC SCALE

30' 0 30' 60'

US Army Corps of Engineers, Jacksonville District

No.	SYM	ZONE	DESCRIPTION
N	A-N	ABCD...	

DEPARTMENT OF THE ARMY
CORPS OF ENGINEERS
JACKSONVILLE DISTRICT
JACKSONVILLE, FLORIDA

DESIGNED BY: M.J.B.
DWN BY: M.J.B.
CKD BY: E.G.M.
SUBMITTED BY: N/A
PLOT SCALE: AS SHOWN
PLOT DATE: Apr 25, 2014
DATE: SEPTEMBER 2015
SOLICITATION NO.: W912EP-16-R-0010
CONTRACT NO.: N/A
FILE NUMBER: N/A
FILE NAME: 114527-HHDRCRIP3-CF304.DGN

HERBERT HOOVER DIKE REHABILITATION PROJECT
STRUCTURE REPLACEMENTS

S-291 (IP-3) RECONSTRUCTION

CIVIL

PHASE I - COFFERDAM ARMORING PLAN AND SECTIONS

DRAWING NO.

C-04

pw:\\COE-SAJ\PWP02\JAX.saj.ds.usace.army.mil:SAJ\PW\Documents\C&SF\Herbert Hoover Dike Rehabilitation\03-Culvert Rehabilitation\S-292(IP-1), S-290(IP-2), S-291(IP-3) Culvert Reconstruction\070 - Plans\IP-3\05 Civil\C-04

SAFETY ON THIS JOB DEPENDS ON YOU

NOTES:

1. ELEVATIONS ARE IN FEET AND TENTHS AND REFER TO NORTH AMERICAN VERTICAL DATUM 1988 (NAVD).
2. SEE AS-BUILT DRAWINGS R-01 THROUGH R-03 FOR LOCATION DETAILS AND DEMOLITION OF EXISTING STRUCTURES.
3. THE CONTRACTOR SHALL BE RESPONSIBLE FOR THE REQUIRED DEWATERING OF THE CONSTRUCTION SITE. THE REQUIRED DEWATERING PERMITTING IS THE CONTRACTOR'S RESPONSIBILITY.
4. SEE STRUCTURAL DRAWINGS FOR STEEL SHEET PILE COFFERDAM DETAILS.
5. SEE C-06 FOR CONTOUR PLAN.
6. INITIAL EXCAVATION SLOPES FOR LAKESIDE COFFERDAM BERM SHALL HAVE A 1V : 4H SLOPE. SLOPE SHALL BE INCREASED TO 1V : 2H AFTER DEWATERING OF THE EXCAVATION PIT AND COR APPROVAL.

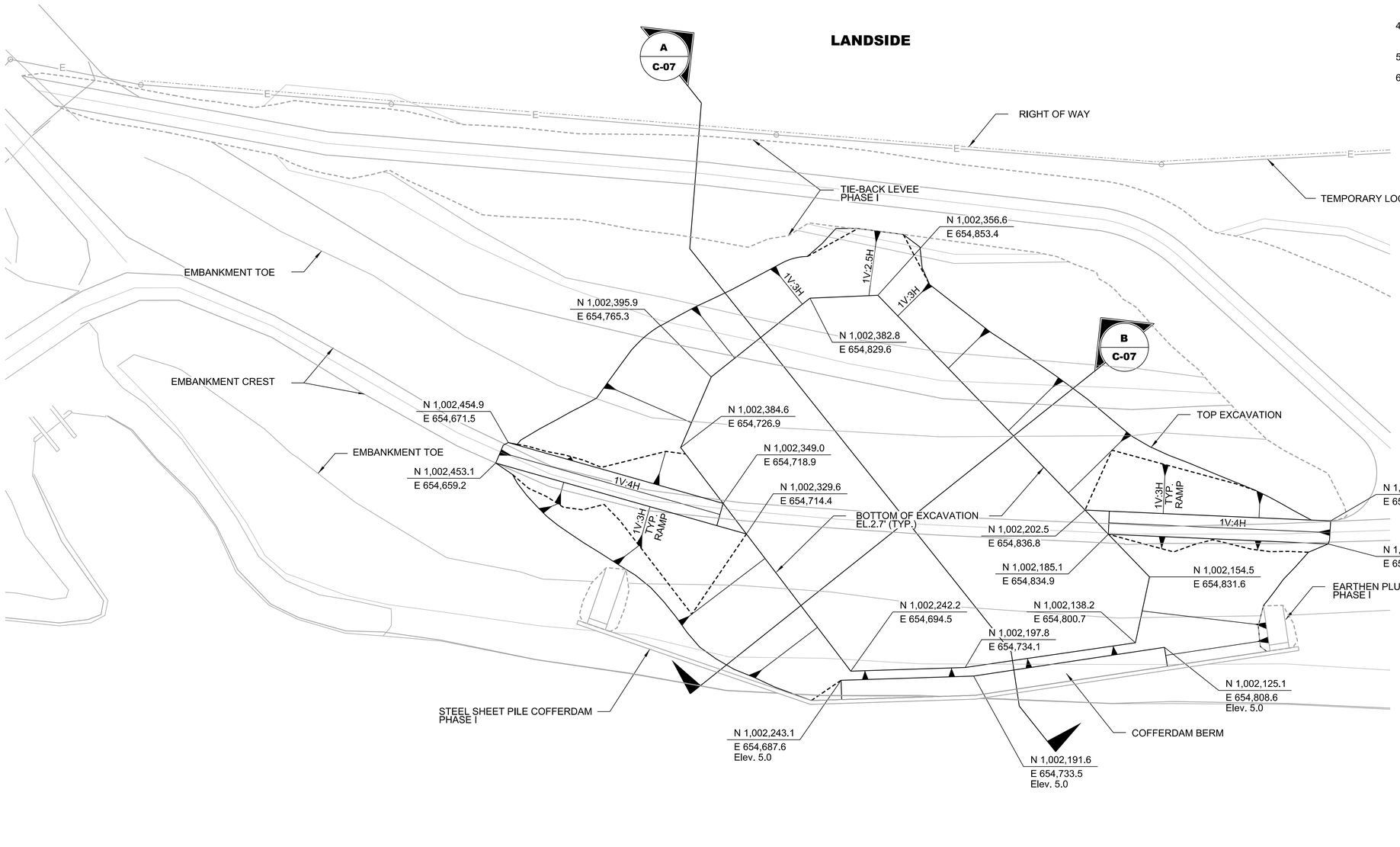

GRAPHIC SCALE

30' 0 30' 60'

US Army Corps of Engineers
Jacksonville District

No.	SYM	ZONE	DESCRIPTION

DEPARTMENT OF THE ARMY
CORPS OF ENGINEERS
JACKSONVILLE DISTRICT
JACKSONVILLE, FLORIDA

DESIGNED BY: M.J.B.	DATE: SEPTEMBER 2015
DWN BY: M.J.B.	CKD BY: E.G.M.
SOLICITATION NO.: W912EP-16-R-0010	
SUBMITTED BY: N/A	CONTRACT NO.: N/A
PLOT SCALE: 1:40	PLOT DATE: Apr 25, 2016
FILE NUMBER: N/A	
FILE NAME: 114527-HHDRCRIP3-CF105	

HERBERT HOOVER DIKE REHABILITATION PROJECT
STRUCTURE REPLACEMENTS

S-291 (IP-3) RECONSTRUCTION

CIVIL

PHASE II EXCAVATION PLAN

DRAWING NO.

C-05

pw:\\COE-SAJ\PWP02\JAX.saj.ds.usace.army.mil:SAJ\PW\Documents\C&SF\Herbert Hoover Dike Rehabilitation\03-Culvert Rehabilitation\S-292(IP-1), S-290(IP-2), S-291(IP-3) Culvert Reconstruction\070 - Plans\IP-3\05 Civil\C-05

SAFETY ON THIS JOB DEPENDS ON YOU

NOTES:

1. ELEVATIONS ARE IN FEET AND TENTHS AND REFER TO NORTH AMERICAN VERTICAL DATUM 1988 (NAVD).
2. PROPOSED EXCAVATION CONTOURS ARE SHOWN IN BOLD AFTER DEWATERING, EXISTING CONTOURS AFTER COFFERDAM CONSTRUCTION ARE SHOWN IN DASHED.
3. NO PORTION OF THE EXISTING EMBANKMENT, EXCEPT SURFACE TREATMENTS THE COFFERDAM SYSTEMS ARE IN PLACE, COMPLETE, AND APPROVED BY THE COR. THE EMBANKMENT SHALL NOT BE DEGRADED OUTSIDE THE LIMITS OF THE COFFERDAM.
4. CONTRACTOR SHALL PROVIDE A TURBIDITY CONTROL AND MONITORING PLAN, INCLUDING TURBIDITY BARRIERS PER THE SPECIFICATIONS.

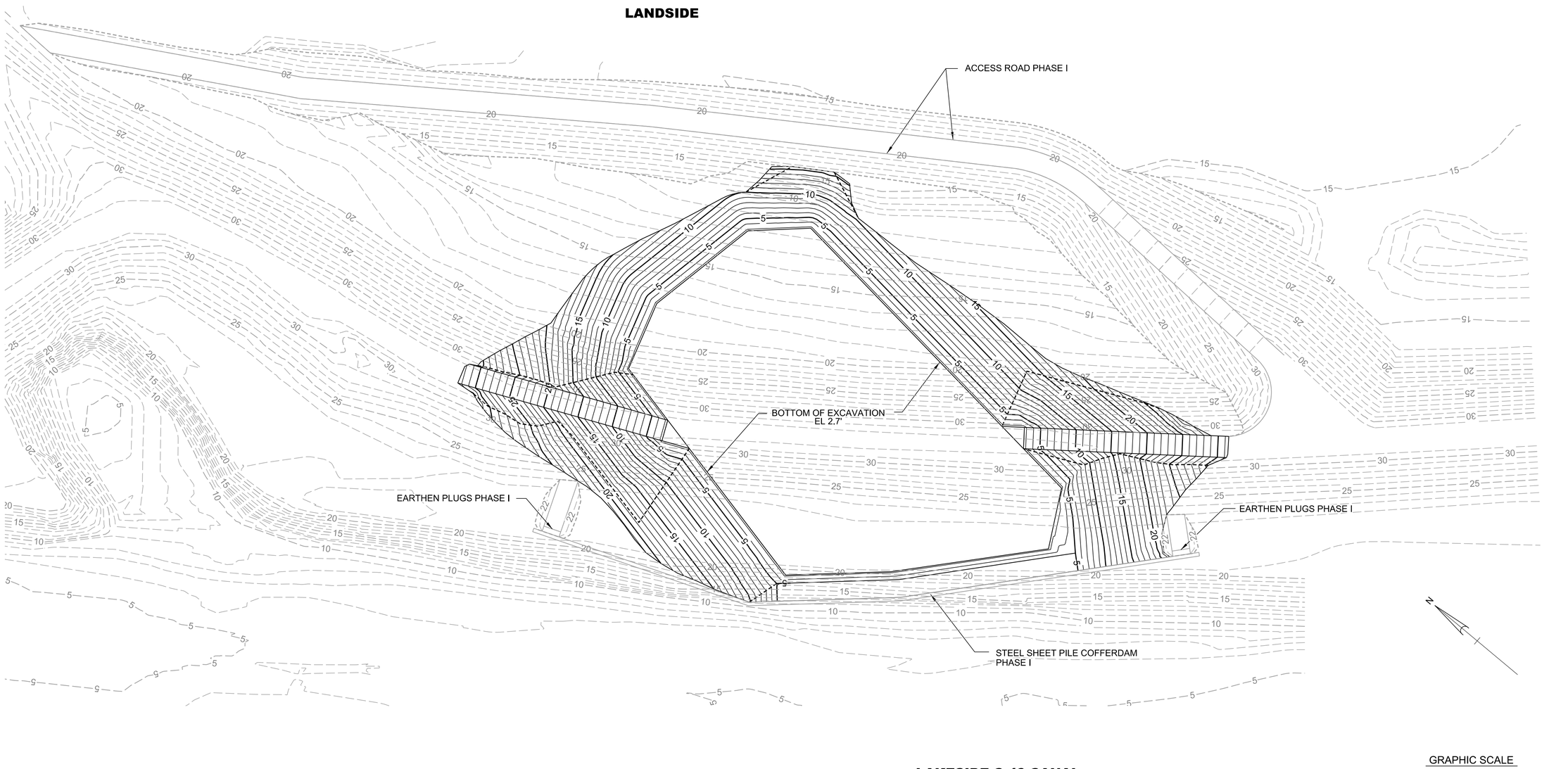

US Army Corps of Engineers
Jacksonville District

No.	SYM	ZONE	DESCRIPTION

DEPARTMENT OF THE ARMY
CORPS OF ENGINEERS
JACKSONVILLE DISTRICT
JACKSONVILLE, FLORIDA

DESIGNED BY: M.J.B.	DATE: SEPTEMBER 2015
DWN BY: M.J.B.	CKD BY: E.G.M.
SOLICITATION NO.: W912EP-16-R-0010	
SUBMITTED BY: N/A	CONTRACT NO.: N/A
PLOT SCALE: 1:1	PLOT DATE: Apr 25, 2016
FILE NUMBER: N/A	
FILE NAME: 114527-HHDRCRIP3-CF106	

HERBERT HOOVER DIKE REHABILITATION PROJECT
STRUCTURE REPLACEMENTS

S-291 (IP-3) RECONSTRUCTION

CIVIL

PHASE II EXCAVATION CONTOUR PLAN

DRAWING NO.

C-06

pw:\\COE-SAJPW02JAX.saj.ds.usace.army.mil:SAJPW\Documents\C&SF\Herbert Hoover Dike Rehabilitation\03-Culvert Rehabilitation\S-292(IP-1), S-290(IP-2), S-291(IP-3) Culvert Reconstruction\070 - Plans\IP-3\05 Civil\C-06

SAFETY ON THIS JOB DEPENDS ON YOU

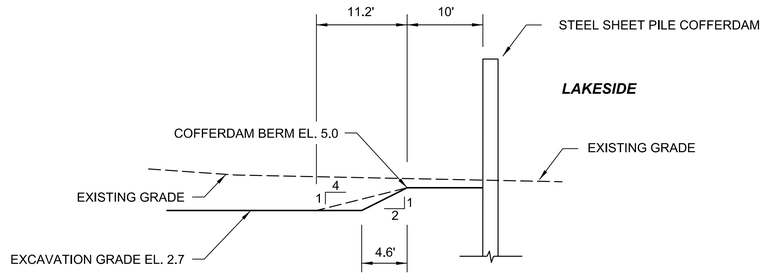

1 / C-07 **DETAIL**
SCALE: B

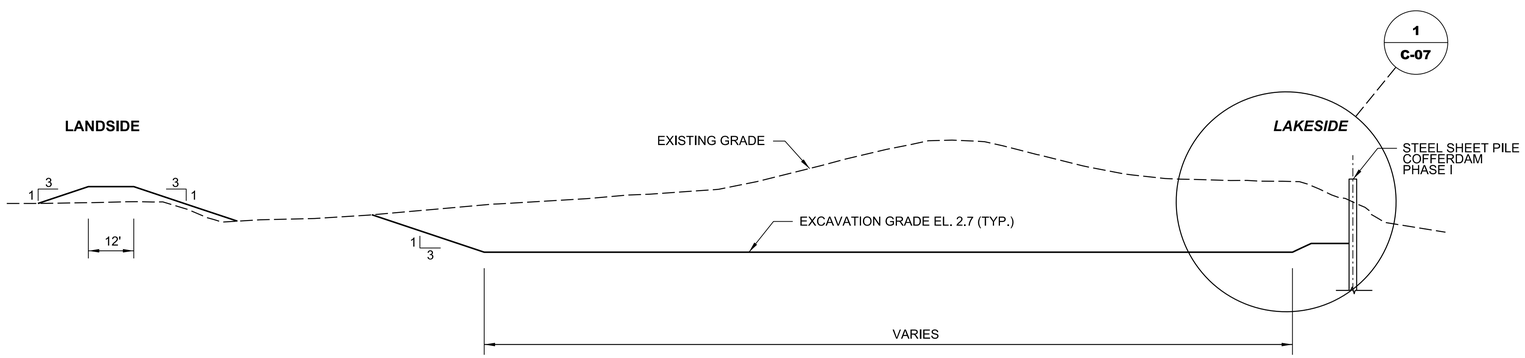

A / C-05 **SECTION**
SCALE: A

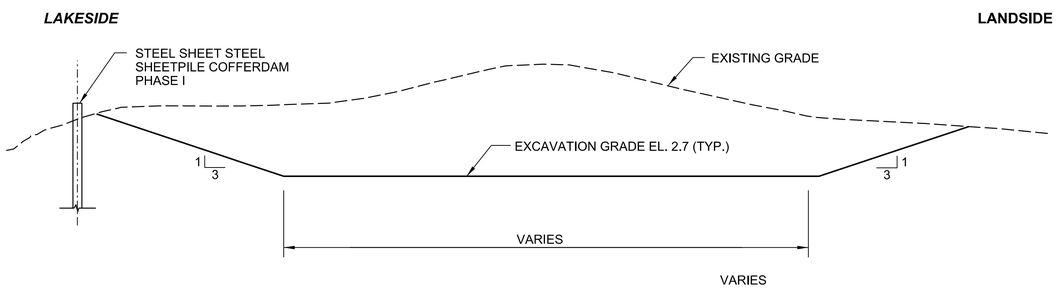

B / C-05 **SECTION**
SCALE: A

NOTES:

1. ELEVATIONS ARE IN FEET AND TENTHS AND REFER TO NORTH AMERICAN VERTICAL DATUM 1988 (NAVD)
2. SEE R-01 THROUGH R-03 FOR EXISTING STRUCTURE INFORMATION.
3. REFER TO STRUCTURAL DRAWINGS FOR ELEVATIONS OF DRIVEN PILE COFFERDAM.
4. INITIAL EXCAVATION SLOPES FOR LAKESIDE COFFERDAM BERM SHALL HAVE A 1V : 4H SLOPE. SLOPE SHALL BE INCREASED TO 1V : 2H AFTER DEWATERING OF THE EXCAVATION PIT AND COR APPROVAL.
5. NO EXCAVATION SHALL EXTEND BELOW EXCAVATION GRADE LINES SHOWN WITHOUT COR APPROVAL.
6. UNSATISFACTORY MATERIAL WITHIN THE COFFERDAM BERM SHALL BE REMOVED AND REPLACED WITH EMBANKMENT FILL. SEE SPECIFICATION 35 41 00

GRAPHIC SCALES

A 20' 0 20' 40'

B 10' 0 10' 20'

US Army Corps of Engineers
Jacksonville District

No.	SYM	ZONE	DESCRIPTION
N	A	A-N	ABCD...

DEPARTMENT OF THE ARMY
CORPS OF ENGINEERS
JACKSONVILLE DISTRICT
JACKSONVILLE, FLORIDA

DESIGNED BY: M.J.B.	DATE: SEPTEMBER 2015
DWN BY: M.J.B.	CKD BY: E.G.M.
SOLICITATION NO.: W912EP-16-R-0010	
SUBMITTED BY: N/A	CONTRACT NO.: N/A
PLOT SCALE: AS SHOWN	PLOT DATE: Apr 25, 2016
FILE NUMBER: N/A	
FILE NAME: 114527-HHDRCRIP3-CF307	

HERBERT HOOVER DIKE REHABILITATION PROJECT
STRUCTURE REPLACEMENTS

S-291 (IP-3) RECONSTRUCTION

CIVIL

PHASE II - EXCAVATION CROSS SECTION

DRAWING NO.
C-07

pw:\\COE-SAJPW\P02JAX.saj.ds.usace.army.mil:SAJPW\Documents\C&SF\Herbert Hoover Dike Rehabilitation\03-Culvert Rehabilitation\S-292(IP-1), S-290(IP-2), S-291(IP-3) Culvert Reconstruction\070 - Plans\IP-3\05 Civil\C-07

SAFETY ON THIS JOB DEPENDS ON YOU

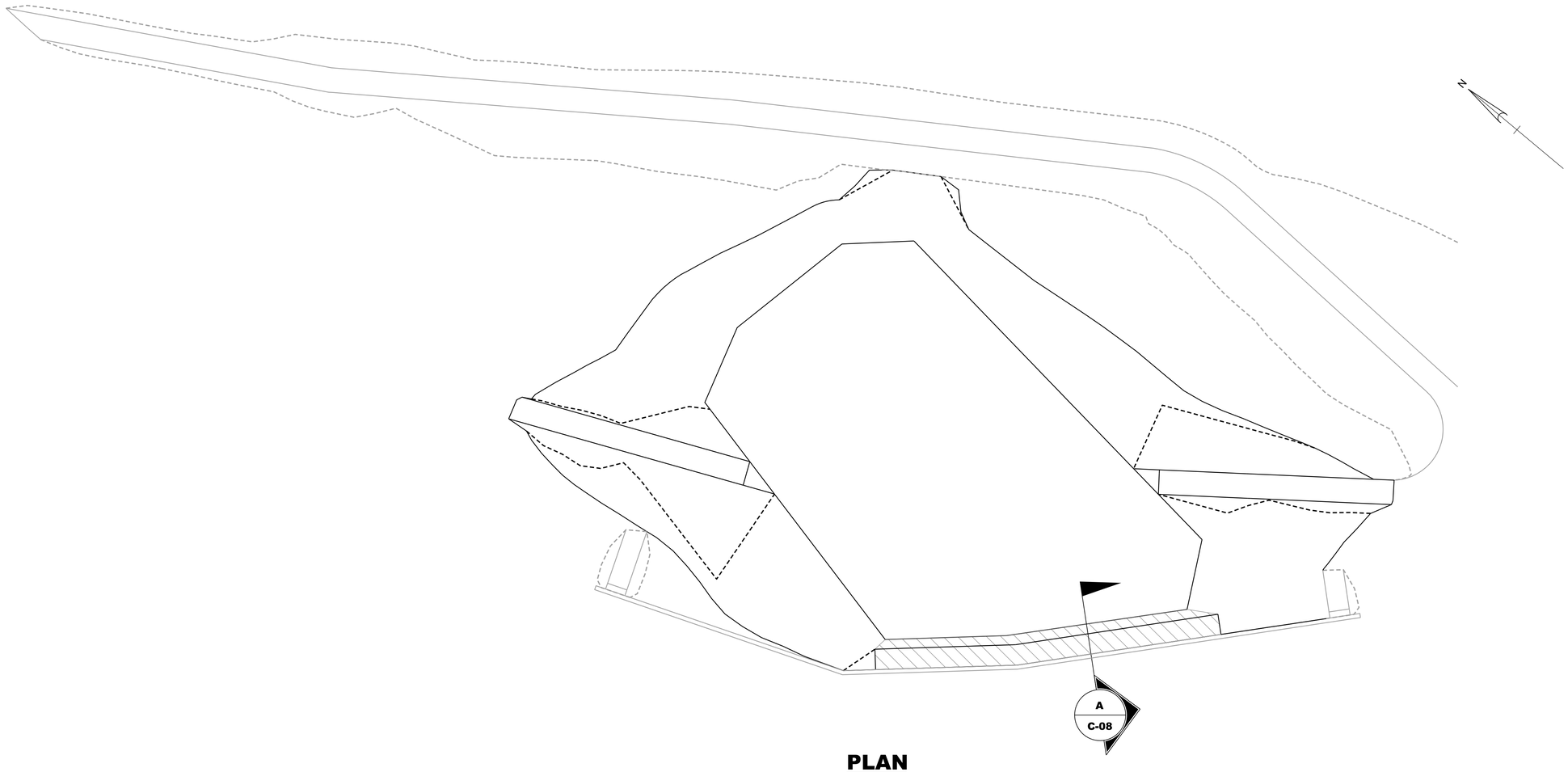

PLAN
SCALE: A

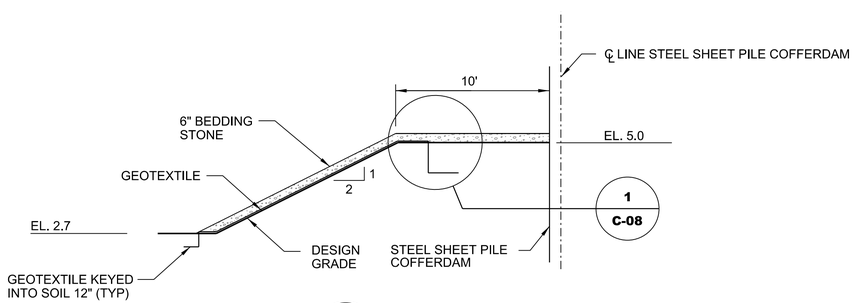

A C-08 **SECTION**
N.T.S.

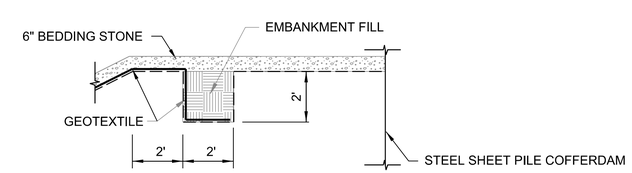

1 C-08 **DETAIL**
N.T.S.

LEGEND:

6" BEDDING STONE (PLAN VIEW)

GRAPHIC SCALE

30' 0 30' 60'

US Army Corps of Engineers
Jacksonville District

No.	SYM	ZONE	DESCRIPTION

DEPARTMENT OF THE ARMY
CORPS OF ENGINEERS
JACKSONVILLE DISTRICT
JACKSONVILLE, FLORIDA

DESIGNED BY: M.J.B.	DATE: AUG. 2015
DWN BY: M.J.B.	CKD BY: J.R.W.
SOLICITATION NO.: W912EP-16-R-0010	
SUBMITTED BY: N/A	CONTRACT NO.: N/A
PLOT SCALE: AS SHOWN	PLOT DATE: Apr 25, 2016
FILE NUMBER: N/A	
FILE NAME: 114527-HHDRCRCBIP3-CF208.DGN	

HERBERT HOOVER DIKE REHABILITATION PROJECT
STRUCTURE REPLACEMENTS

S-291 (IP-3) RECONSTRUCTION

CIVIL

PHASE II - EXCAVATION SEEPAGE PROTECTION PLAN

DRAWING NO.

C-08

pw:\\COE-SAJPWP02JAX.saj.ds.usace.army.mil:SAJPW\Documents\C&SF\Herbert Hoover Dike Rehabilitation\03-Culvert Rehabilitation\S-292(IP-1), S-290(IP-2), S-291(IP-3) Culvert Reconstruction\070 - Plans\IP-3\05 Civil\C-08

SAFETY ON THIS JOB DEPENDS ON YOU

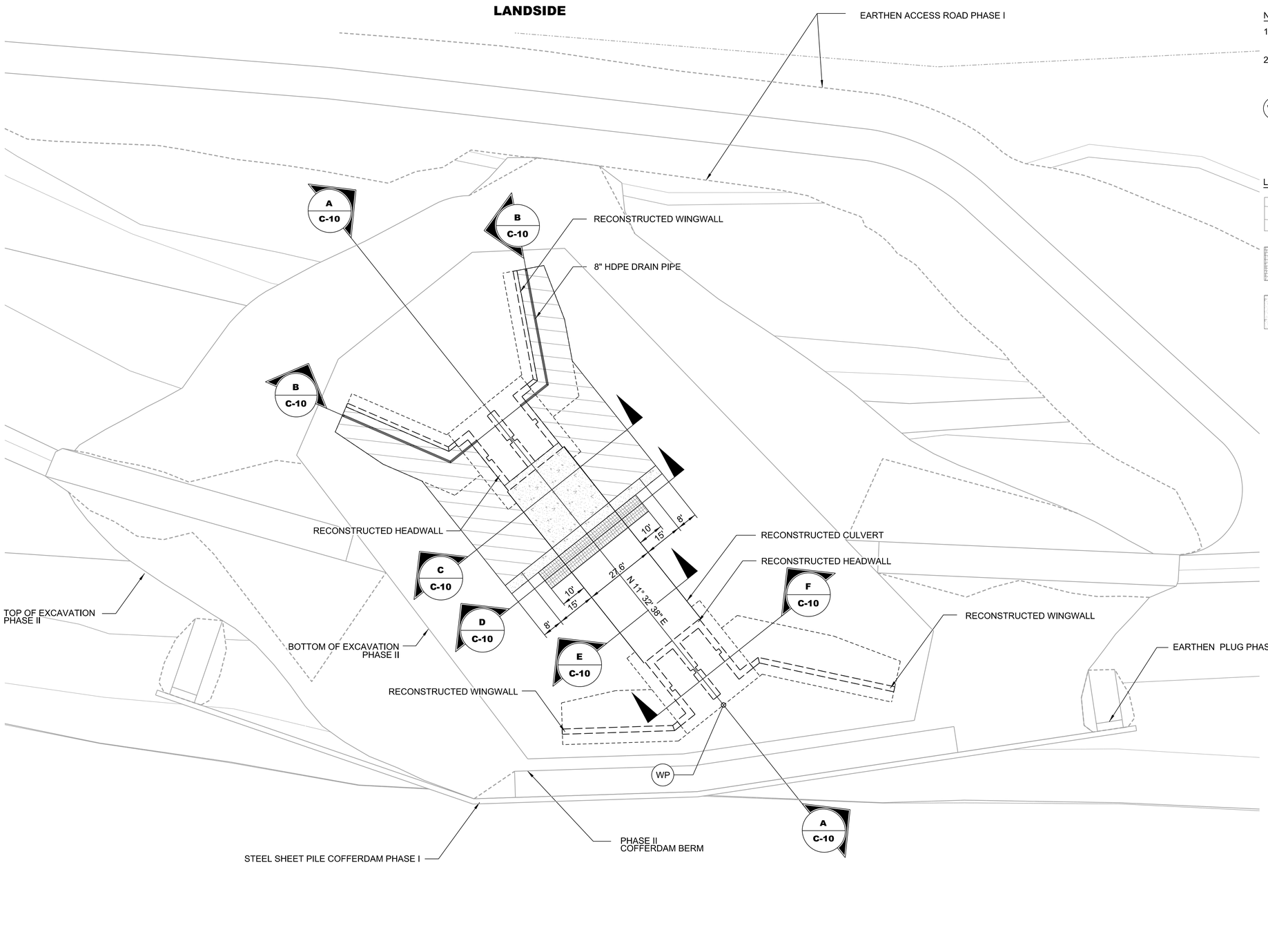

NOTES:

1. ELEVATIONS ARE IN FEET AND TENTHS AND REFER TO NORTH AMERICAN VERTICAL DATUM 1988 (NAVD)
2. REFER TO STRUCTURAL DRAWINGS FOR CONSTRUCTION DETAILS OF S-291 STRUCTURE.

(WP) WORK POINT AT CENTERLINE OF STRUCTURE AT LAKESIDE FACE OF END SILL.
N: 1,002,198.0
E: 654,758.4
CENTERLINE BEARING: N 11° 32' 38" E

LEGEND:

- DRAINAGE BLANKET (FILTER SOIL AND FILTER GRAVEL)
- SOIL-BENTONITE FILL
- FILTER MATERIAL

US Army Corps of Engineers
Jacksonville District

No.	STM	ZONE	DESCRIPTION
N	A	A-N	ABCD...

DEPARTMENT OF THE ARMY
CORPS OF ENGINEERS
JACKSONVILLE DISTRICT
JACKSONVILLE, FLORIDA

DESIGNED BY: M.J.B.	DATE: SEPTEMBER 2015
DWN BY: M.J.B.	CKD BY: E.G.M.
SOLICITATION NO.: W912EP-16-R-0010	
SUBMITTED BY: N/A	CONTRACT NO.: N/A
PLOT SCALE: N/A	PLOT DATE: Apr 25, 2016
FILE NUMBER: N/A	
FILE NAME: 114527-HHDRCRIP3-CF109	

HERBERT HOOVER DIKE REHABILITATION PROJECT
STRUCTURE REPLACEMENTS

S-291 (IP-3) RECONSTRUCTION

CIVIL

PHASE III STRUCTURE INSTALLATION PLAN

DRAWING NO.

C-09

pw:\\COE-SAJPWP02JAX.saj.ds.usace.army.mil:SAJPW\Documents\C&SF\Herbert Hoover Dike Rehabilitation\03-Culvert Rehabilitation\S-292(IP-1), S-290(IP-2), S-291(IP-3) Culvert Reconstruction\070 - Plans\IP-3\05 Civil\C-09

SAFETY ON THIS JOB DEPENDS ON YOU

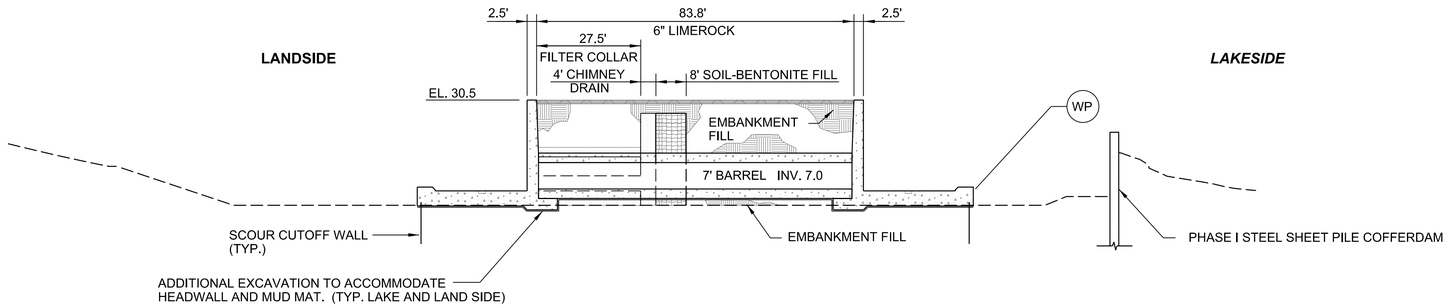

A / C-09 **SECTION**
SCALE: A

NOTES:

1. ELEVATIONS ARE IN FEET AND TENTHS AND REFER TO NORTH AMERICAN VERTICAL DATUM 1988 (NAVD)
2. REFER TO STRUCTURAL DRAWINGS FOR CONSTRUCTION DETAILS OF STRUCTURE & SCOUR CUTOFF WALLS.
3. DIMENSIONS OF FILTER MATERIAL ARE MINIMUM VALUES. FINAL DIMENSIONS SHALL BE THAT REQUIRED FOR CONSTRUCTABILITY

WP SEE SHEET C-09 FOR WORK POINT LOCATION

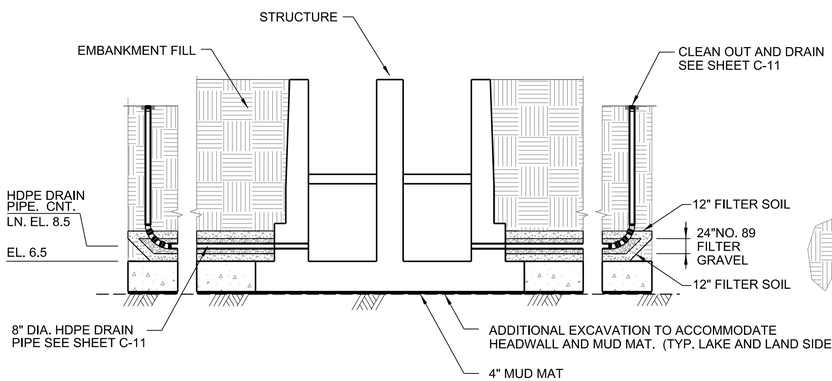

B / C-09 **SECTION**
SCALE: B

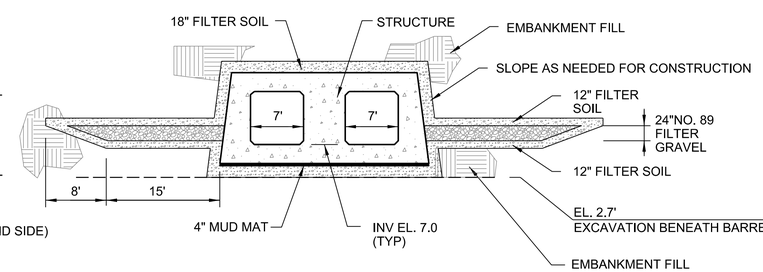

C / C-09 **SECTION**
SCALE: B

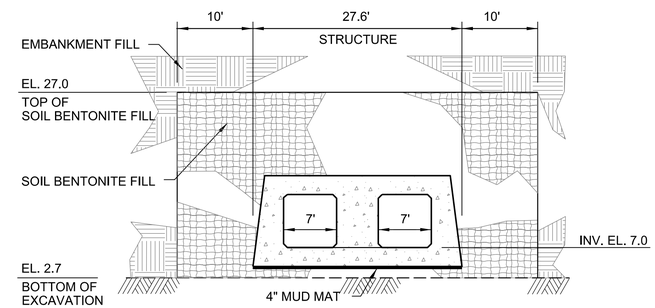

D / C-09 **SECTION**
SCALE: B

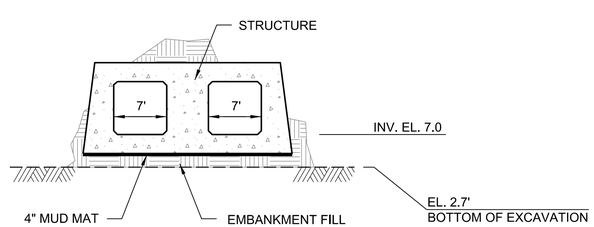

E / C-09 **SECTION**
SCALE: B

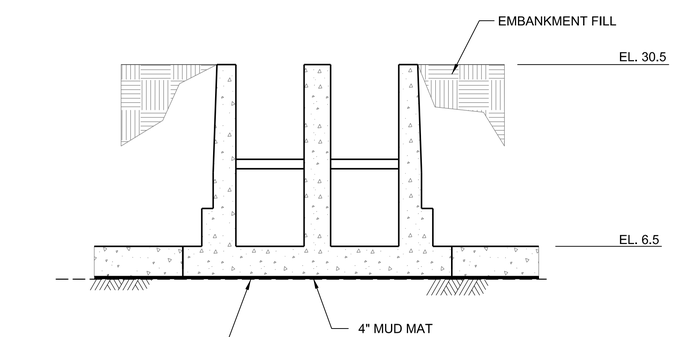

F / C-09 **SECTION**
SCALE: B

GRAPHIC SCALES

"A" 20' 0 20' 40'

"B" 10' 0 10' 20'

US Army Corps of Engineers, Jacksonville District

No.	SYM	ZONE	DESCRIPTION

DESIGNED BY: M.J.B. | DATE: SEPTEMBER 2015
DWN BY: M.J.B | CKD BY: E.G.M. | SOLICITATION NO.: W912EP-16-R-0010
SUBMITTED BY: N/A | CONTRACT NO.: N/A
PLOT SCALE: N/A | PLOT DATE: Apr 25, 2016 | FILE NUMBER: N/A
FILE NAME: 114527-HHDRCRIP3-CF310.DGN

DEPARTMENT OF THE ARMY
CORPS OF ENGINEERS
JACKSONVILLE DISTRICT
JACKSONVILLE, FLORIDA

HERBERT HOOVER DIKE REHABILITATION PROJECT
STRUCTURE REPLACEMENTS

S-291 (IP-3) RECONSTRUCTION

CIVIL

PHASE III - STRUCTURE INSTALLATION CROSS SECTIONS

DRAWING NO.
C-10

pw:\\COE-SAJPWP02JAX.saj.ds.usace.army.mil:SAJPW\Documents\C&SF\Herbert Hoover Dike Rehabilitation\03-Culvert Rehabilitation\S-292(IP-1), S-290(IP-2), S-291(IP-3) Culvert Reconstruction\070 - Plans\IP-3\05 Civil\C-10

SAFETY ON THIS JOB DEPENDS ON YOU

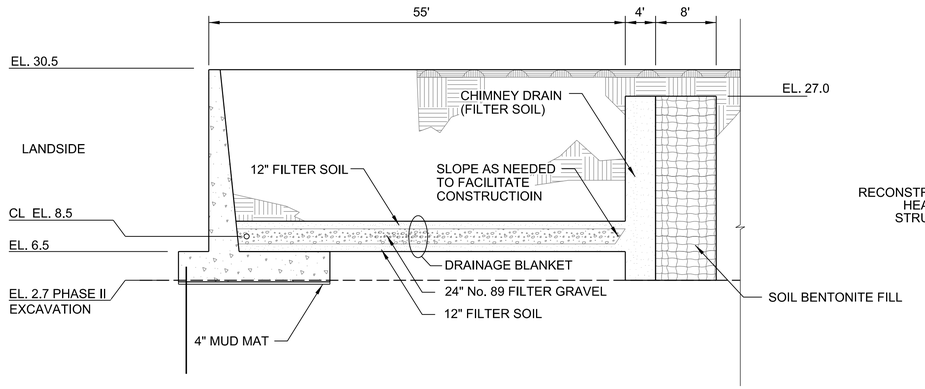

B C-11 **SECTION**
SCALE: A

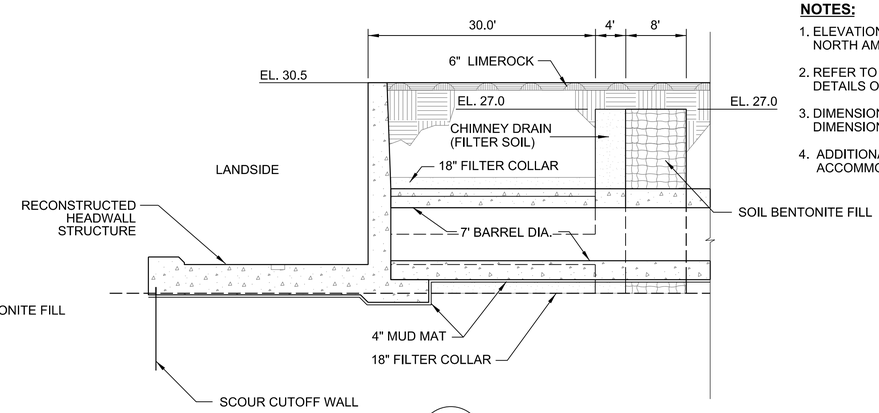

A C-11 **SECTION**
SCALE: A

NOTES:

1. ELEVATIONS ARE IN FEET AND TENTHS AND REFER TO NORTH AMERICAN VERTICAL DATUM 1988 (NAVD)
2. REFER TO STRUCTURAL DRAWINGS FOR CONSTRUCTION DETAILS OF STRUCTURE.
3. DIMENSIONS OF FILTER MATERIAL ARE MINIMUM VALUES. FINAL DIMENSIONS SHALL BE THAT REQUIRED FOR CONSTRUCTABILITY.
4. ADDITIONAL EXCAVATION SHALL BE REQUIRED TO ACCOMMODATE HEADWALL, WINGWALL, AND MUD MAT.

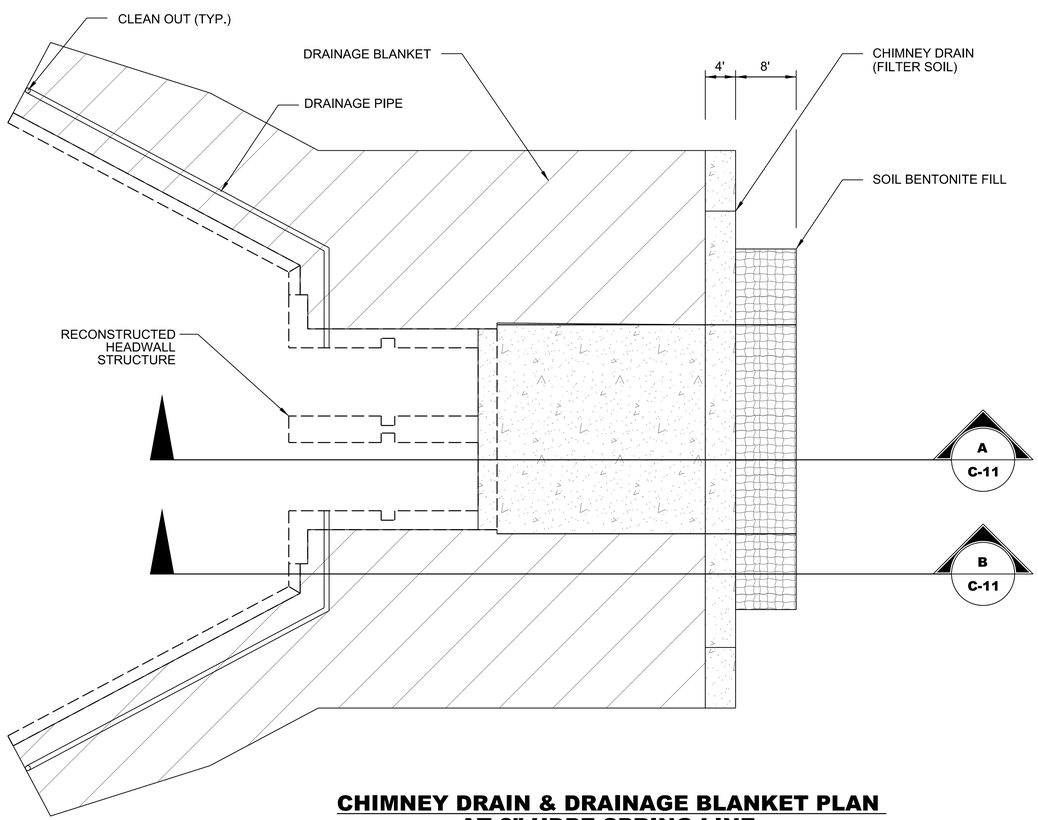

CHIMNEY DRAIN & DRAINAGE BLANKET PLAN AT 8" HDPE SPRING LINE
SCALE: A

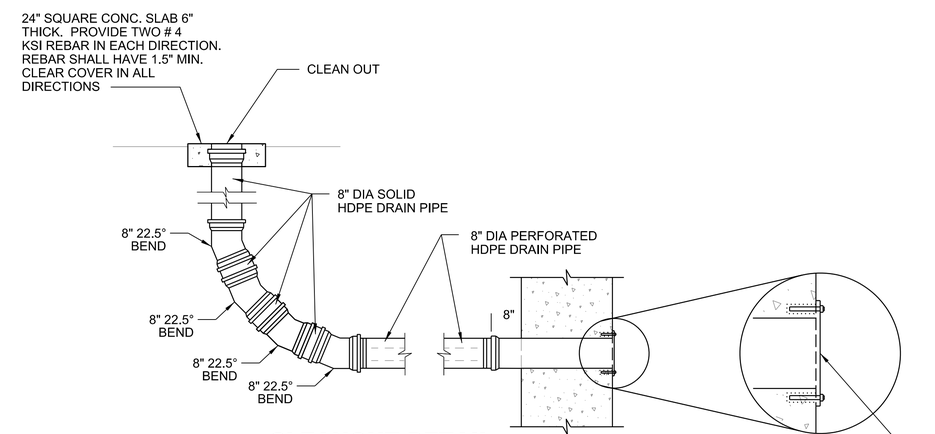

CLEANOUT DETAIL
N.T.S.

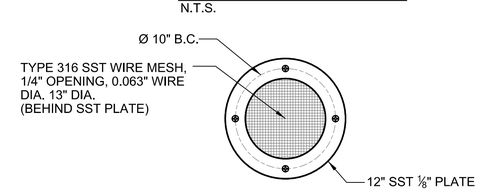

STAINLESS STEEL WIRE CAP DETAIL
N.T.S.

GRAPHIC SCALE
A 10' 0 10' 20'

US Army Corps of Engineers
Jacksonville District

No.	SYM	ZONE	DESCRIPTION

DEPARTMENT OF THE ARMY
CORPS OF ENGINEERS
JACKSONVILLE DISTRICT
JACKSONVILLE, FLORIDA

DESIGNED BY: M.J.B.	DATE: SEPTEMBER 2015
DWN BY: M.J.B.	CKD BY: E.G.M.
SOLICITATION NO.: W912EP-16-R-0010	
SUBMITTED BY: N/A	CONTRACT NO.: N/A
PLOT SCALE: AS SHOWN	PLOT DATE: Apr 25, 2016
FILE NUMBER: N/A	
FILE NAME: 114527-HHDRCRIP3-CF511.DGN	

HERBERT HOOVER DIKE REHABILITATION PROJECT
STRUCTURE REPLACEMENTS
S-291 (IP-3) RECONSTRUCTION
CIVIL
PHASE III - STRUCTURE
INSTALLATION DETAILS - DRAINAGE

DRAWING NO.
C-11

pw:\\COE-SAJPWP02JAX.saj.ds.usace.army.mil:SAJPW\Documents\C&SF\Herbert Hoover Dike Rehabilitation\03-Culvert Rehabilitation\S-292(IP-1), S-290(IP-2), S-291(IP-3) Culvert Reconstruction\070 - Plans\IP-3\05 Civil\C-11

SAFETY ON THIS JOB DEPENDS ON YOU

NOTES:

1. ELEVATIONS ARE IN FEET AND TENTHS AND REFER TO NORTH AMERICAN VERTICAL DATUM 1988 (NAVD)
2. ELEVATIONS SHOWN DEPICT FINISHED GRADE INCLUSIVE OF ALL SURFACE TREATMENTS WITH THE EXCEPTION OF IMPORT RIPRAP OUTSIDE OF INTAKE AND DISCHARGE CHANNEL. SEE SHEET C-23 FOR SURFACING PLAN.
3. NO PORTION OF THE PHASE I TIE-BACK LEVEE OR LAKESIDE COFFERDAM SYSTEM SHALL BE DEGRADED OR REMOVED UNTIL THE COMPLETE STRUCTURE INCLUDING GATE AND EMBANKMENT WITH SURFACING ARE IN PLACE AND APPROVED BY THE COR.
4. SEE ELECTRICAL DRAWINGS FOR INSTALLATION DETAILS.
5. SEE STRUCTURE DRAWINGS FOR BUILDING, BUILDING SUPPORT CONCRETE SLAB DETAILS, DETAILS OF S-291 STRUCTURE, AND ELEVATIONS OF STEEL SHEET PILE COFFERDAM
6. STILLING WELL AND STILLING WELL CONCRETE PAD DETAILS ARE LOCATED ON MECHANICAL DRAWINGS.
7. BOLLARD DETAIL FOUND ON SHEET C-24.

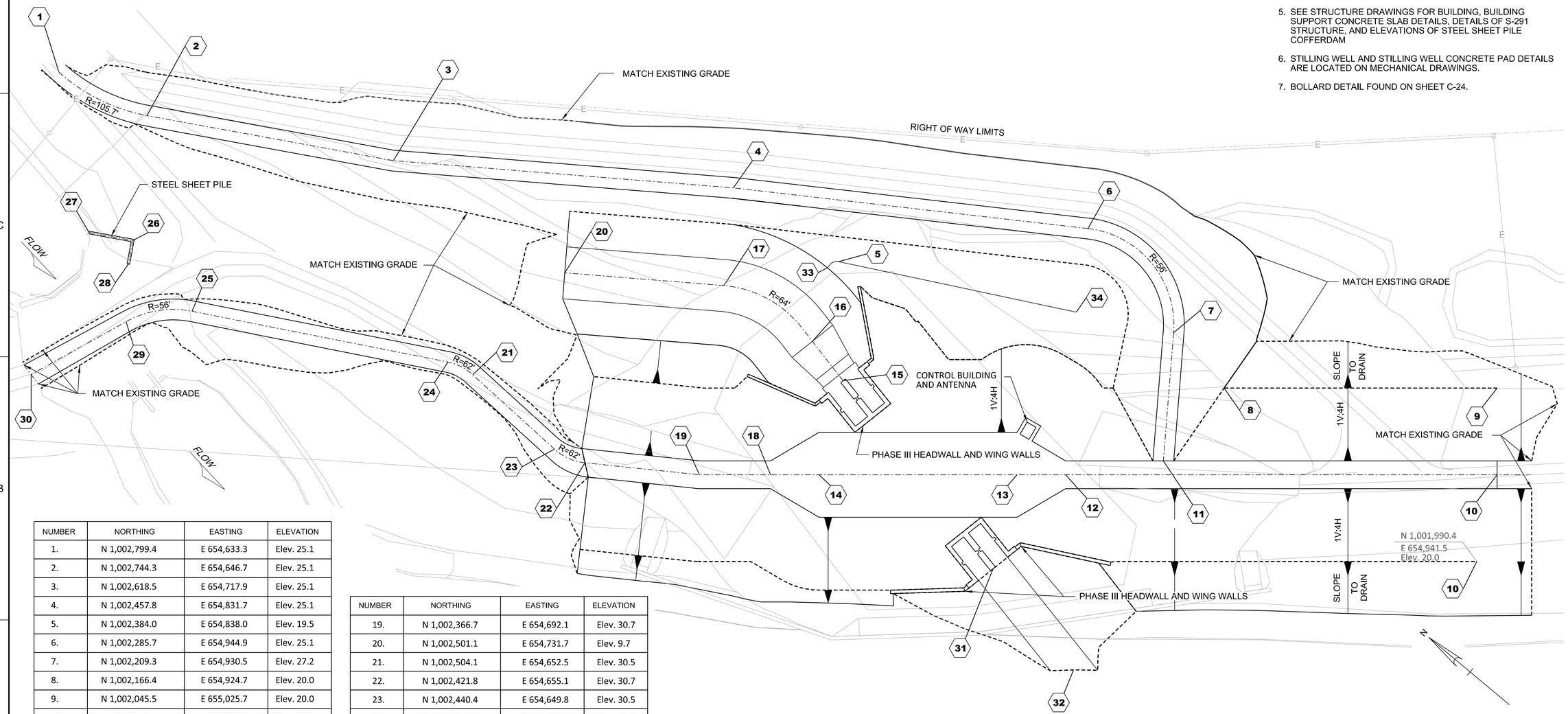

NUMBER	NORTHING	EASTING	ELEVATION
1.	N 1,002,799.4	E 654,633.3	Elev. 25.1
2.	N 1,002,744.3	E 654,646.7	Elev. 25.1
3.	N 1,002,618.5	E 654,717.9	Elev. 25.1
4.	N 1,002,457.8	E 654,831.7	Elev. 25.1
5.	N 1,002,384.0	E 654,838.0	Elev. 19.5
6.	N 1,002,285.7	E 654,944.9	Elev. 25.1
7.	N 1,002,209.3	E 654,930.5	Elev. 27.2
8.	N 1,002,166.4	E 654,924.7	Elev. 20.0
9.	N 1,002,045.5	E 655,025.7	Elev. 20.0
10.	N 1,002,013.4	E 654,987.4	Elev. 30.7
11.	N 1,002,166.4	E 654,870.0	Elev. 30.5
12.	N 1,002,204.6	E 654,827.7	Elev. 30.7
13.	N 1,002,226.1	E 654,809.7	Elev. 31.0
14.	N 1,002,313.8	E 654,736.4	Elev. 31.0
15.	N 1,002,337.9	E 654,786.9	Elev. 7.0
16.	N 1,002,366.1	E 654,793.0	Elev. 9.7
17.	N 1,002,425.9	E 654,785.0	Elev. 9.7
18.	N 1,002,335.3	E 654,718.5	Elev. 30.7

NUMBER	NORTHING	EASTING	ELEVATION
19.	N 1,002,366.7	E 654,692.1	Elev. 30.7
20.	N 1,002,501.1	E 654,731.7	Elev. 9.7
21.	N 1,002,504.1	E 654,652.5	Elev. 30.5
22.	N 1,002,421.8	E 654,655.1	Elev. 30.7
23.	N 1,002,440.4	E 654,649.8	Elev. 30.5
24.	N 1,002,519.8	E 654,649.0	Elev. 30.5
25.	N 1,002,652.0	E 654,576.7	Elev. 30.5
26.	N 1,002,704.4	E 654,586.1	
27.	N 1,002,726.7	E 654,573.5	
28.	N 1,002,697.61	E 654,574.06	
29.	N 1,002,677.3	E 654,547.7	Elev. 30.5
30.	N 1,002,699.8	E 654,489.2	Elev. 30.5
31	N 1,002,201.9	E 654,759.2	Elev. 7.0
32	N 1,002,128.9	E 654,744.3	Elev. 7.0

33.	N 1,002,386.7	E 654,831.1	Elev. 19.5
34.	N 1,002,260.0	E 654,903.6	Elev. 19.5
35.	N 1,001,990.4	E 654,941.5	Elev. 20.0

US Army Corps of Engineers
Jacksonville District

No.	SYM	ZONE	DESCRIPTION
N	A-N	ABCD...	

DEPARTMENT OF THE ARMY
CORPS OF ENGINEERS
JACKSONVILLE DISTRICT
JACKSONVILLE, FLORIDA

DESIGNED BY: M.J.B.
DATE: DWG BEGUN DATE
DWN BY: M.J.B.
CKD BY: E.D.M.
SOLICITATION NO.: W912EP-16-R-0010
SUBMITTED BY: N/A
CONTRACT NO.: N/A
PLOT SCALE: AS SHOWN
PLOT DATE: Apr 25, 2014
FILE NUMBER: N/A
FILE NAME: 114527-HHDRCRIP3-CF112.DGN

HERBERT HOOVER DIKE REHABILITATION PROJECT
STRUCTURE REPLACEMENTS

S-291 (IP-3) RECONSTRUCTION

CIVIL
PHASE IV PT I - EMBANKMENTS & CHANNEL CENTER LINE RECONSTRUCTION GRADING PLAN

DRAWING NO.
C-12

pw:\\COE-SAJ\WP02\JAX.saj.ds.usace.army.mil:SAJPW\Documents\C&SF\Herbert Hoover Dike Rehabilitation\03-Culvert Rehabilitation\S-292(IP-1), S-290(IP-2), S-291(IP-3) Culvert Reconstruction\070 - Plans\IP-3\05 Civil\C-12

SAFETY ON THIS JOB DEPENDS ON YOU

NUMBER	NORTHING	EASTING	ELEVATION
1.	N 1,002,799.1	E 654,638.9	Elev. 25.0
2.	N 1,002,807.8	E 654,628.0	Elev. 25.0
3.	N 1,002,747.2	E 654,651.9	Elev. 25.0
4.	N 1,002,741.4	E 654,641.4	Elev. 25.0
5.	N 1,002,693.1	E 654,487.6	Elev. 30.5
6.	N 1,002,706.5	E 654,490.8	Elev. 30.5
7.	N 1,002,672.0	E 654,544.9	Elev. 30.5
8.	N 1,002,682.6	E 654,550.6	Elev. 30.5
9.	N 1,002,649.1	E 654,571.5	Elev. 30.5
10.	N 1,002,654.8	E 654,582.0	Elev. 30.5
11.	N 1,002,622.0	E 654,722.8	Elev. 25.0
12.	N 1,002,615.5	E 654,712.7	Elev. 25.0
13.	N 1,002,522.8	E 654,654.2	Elev. 30.5
14.	N 1,002,517.0	E 654,643.7	Elev. 30.5

NUMBER	NORTHING	EASTING	ELEVATION
15.	N 1,002,504.4	E 654,646.5	Elev. 30.5
16.	N 1,002,503.9	E 654,658.5	Elev. 30.5
17.	N 1,002,437.3	E 654,643.7	Elev. 30.5
18.	N 1,002,384.4	E 654,603.3	Elev. 19.9
19.	N 1,002,392.0	E 654,614.9	Elev. 20.0
20.	N 1,002,415.1	E 654,650.0	Elev. 30.5
21.	N 1,002,428.6	E 654,660.2	Elev. 30.5
22.	N 1,002,443.6	E 654,656.0	Elev. 30.5
23.	N 1,002,449.9	E 654,696.5	Elev. 20.0
24.	N 1,002,472.9	E 654,709.2	Elev. 19.5
25.	N 1,002,492.4	E 654,719.5	Elev. 9.7
26.	N 1,002,509.8	E 654,743.9	Elev. 9.7
27.	N 1,002,521.7	E 654,760.7	Elev. 20.0

NUMBER	NORTHING	EASTING	ELEVATION
28.	N 1,002,461.2	E 654,836.7	Elev. 25.0
29.	N 1,002,454.4	E 654,826.8	Elev. 25.0
30.	N 1,002,434.3	E 654,797.4	Elev. 9.7
31.	N 1,002,417.5	E 654,772.6	Elev. 9.7
32.	N 1,002,406.4	E 654,756.4	Elev. 19.5
33.	N 1,002,396.5	E 654,732.3	Elev. 20.0
34.	N 1,002,371.5	E 654,698.6	Elev. 30.5
35.	N 1,002,361.9	E 654,685.7	Elev. 30.5
36.	N 1,002,337.0	E 654,652.0	Elev. 20.0
37.	N 1,002,336.7	E 654,634.7	Elev. 19.9
38.	N 1,002,292.5	E 654,658.6	Elev. 19.9
39.	N 1,002,312.0	E 654,672.7	Elev. 20.0
40.	N 1,002,330.1	E 654,712.3	Elev. 30.5
41.	N 1,002,340.4	E 654,724.6	Elev. 30.5
42.	N 1,002,383.1	E 654,743.6	Elev. 20.0

NUMBER	NORTHING	EASTING	ELEVATION
44.	N 1,002,369.2	E 654,778.4	Elev. 9.7
45.	N 1,002,344.1	E 654,776.8	Elev. 7.0
46.	N 1,002,363.0	E 654,807.8	Elev. 9.7
47.	N 1,002,345.3	E 654,800.7	Elev. 7.0
48.	N 1,002,339.6	E 654,798.8	Elev. 7.0
49.	N 1,002,299.0	E 654,835.4	Elev. 20.0
50.	N 1,002,329.5	E 654,755.2	Elev. 30.5
51.	N 1,002,298.1	E 654,717.6	Elev. 30.5
52.	N 1,002,232.3	E 654,705.9	Elev. 20.0
53.	N 1,002,239.4	E 654,711.8	Elev. 20.0
54.	N 1,002,204.1	E 654,748.6	Elev. 7.0
55.	N 1,002,138.8	E 654,735.3	Elev. 7.0
56.	N 1,002,118.0	E 654,753.0	Elev. 7.0
57.	N 1,002,122.8	E 654,793.3	Elev. 19.9
58.	N 1,002,199.8	E 654,769.7	Elev. 7.0
59.	N 1,002,157.2	E 654,800.8	Elev. 20.0
60.	N 1,002,152.2	E 654,805.7	Elev. 20.0
61.	N 1,002,210.3	E 654,790.9	Elev. 30.5

NUMBER	NORTHING	EASTING	ELEVATION
62.	N 1,002,210.3	E 654,790.9	Elev. 30.5
63.	N 1,002,231.9	E 654,830.1	Elev. 30.5
64.	N 1,002,241.8	E 654,828.5	Elev. 30.5
65.	N 1,002,284.3	E 654,847.7	Elev. 20.0
66.	N 1,002,243.4	E 654,838.4	Elev. 30.5
67.	N 1,002,233.5	E 654,840.0	Elev. 30.5
68.	N 1,002,209.7	E 654,833.8	Elev. 30.5
69.	N 1,002,171.0	E 654,866.1	Elev. 30.5
70.	N 1,002,161.8	E 654,873.8	Elev. 30.5
71.	N 1,002,204.4	E 654,934.0	Elev. 27.2
72.	N 1,002,214.1	E 654,927.0	Elev. 27.2
73.	N 1,002,280.9	E 654,940.9	Elev. 25.0
74.	N 1,002,287.5	E 654,951.0	Elev. 25.0
75.	N 1,002,045.5	E 655,025.7	Elev. 20.0
76.	N 1,002,018.6	E 654,993.5	Elev. 30.5
77.	N 1,002,003.2	E 655,006.3	Elev. 31.0
78.	N 1,001,993.0	E 654,994.0	Elev. 30.9
79.	N 1,002,008.3	E 654,981.2	Elev. 30.5
80.	N 1,001,966.0	E 654,961.8	Elev. 20.0

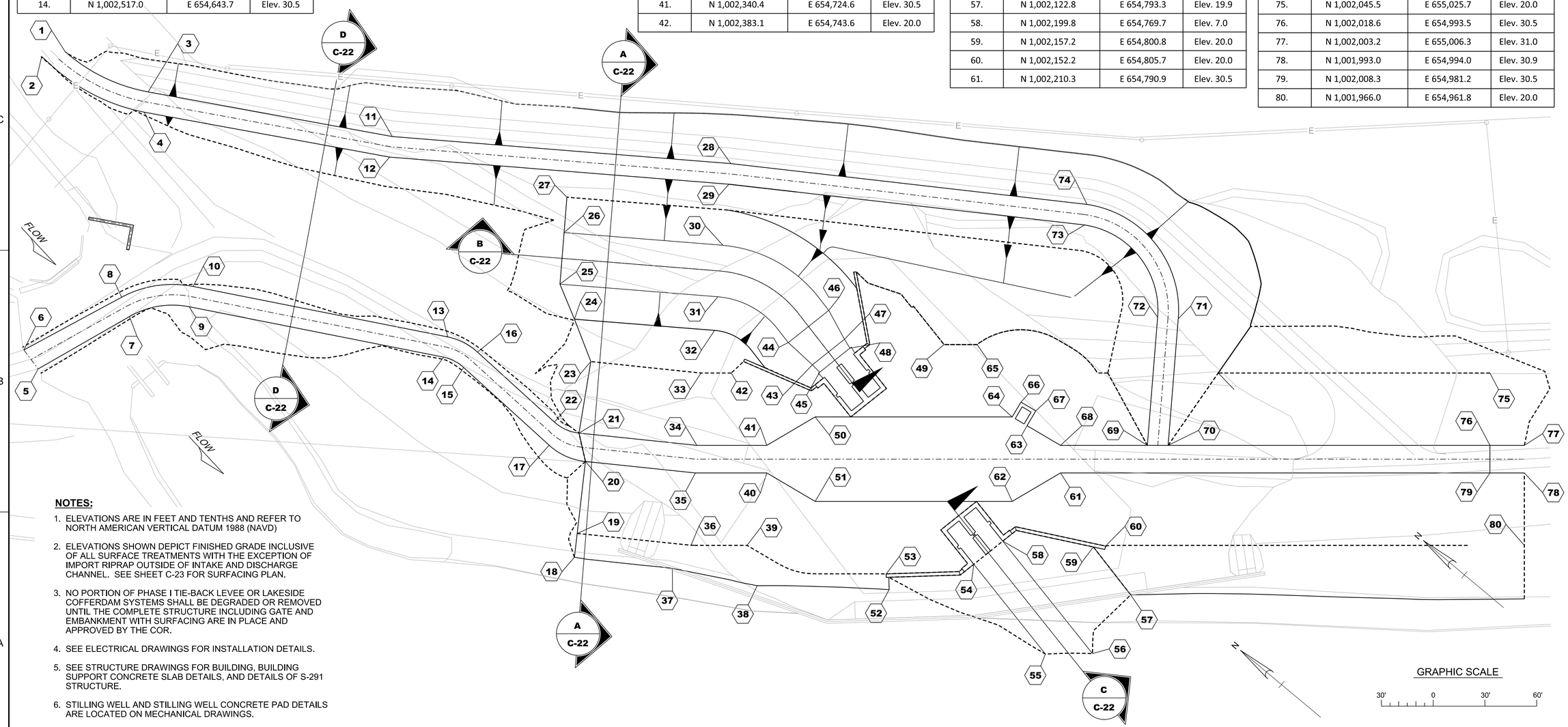

NOTES:

1. ELEVATIONS ARE IN FEET AND TENTHS AND REFER TO NORTH AMERICAN VERTICAL DATUM 1988 (NAVD)
2. ELEVATIONS SHOWN DEPICT FINISHED GRADE INCLUSIVE OF ALL SURFACE TREATMENTS WITH THE EXCEPTION OF IMPORT RIPRAP OUTSIDE OF INTAKE AND DISCHARGE CHANNEL. SEE SHEET C-23 FOR SURFACING PLAN.
3. NO PORTION OF PHASE I TIE-BACK LEVEE OR LAKESIDE COFFERDAM SYSTEMS SHALL BE DEGRADED OR REMOVED UNTIL THE COMPLETE STRUCTURE INCLUDING GATE AND EMBANKMENT WITH SURFACING ARE IN PLACE AND APPROVED BY THE COR.
4. SEE ELECTRICAL DRAWINGS FOR INSTALLATION DETAILS.
5. SEE STRUCTURE DRAWINGS FOR BUILDING, BUILDING SUPPORT CONCRETE SLAB DETAILS, AND DETAILS OF S-291 STRUCTURE.
6. STILLING WELL AND STILLING WELL CONCRETE PAD DETAILS ARE LOCATED ON MECHANICAL DRAWINGS.
7. BOLLARD DETAIL FOUND ON SHEET C-24.
8. REFER TO SHEET C-12 FOR SPOT ELEVATIONS OF CREST CENTERLINE.

US Army Corps of Engineers
Jacksonville District

No.	SYM	ZONE	DESCRIPTION
N	A	A-N	ABCD...

DEPARTMENT OF THE ARMY
CORPS OF ENGINEERS
JACKSONVILLE DISTRICT
JACKSONVILLE, FLORIDA

DESIGNED BY: M.J.B.
DWN BY: M.J.B.
CKD BY: E.G.M.
SUBMITTED BY: N/A
DATE: JAN 13 2016
SOLICITATION NO.: W912EP-16-R-0010
CONTRACT NO.: N/A
PLOT SCALE: As Shown
PLOT DATE: Apr 25, 2016
FILE NUMBER: N/A
FILE NAME: 114527-HHDRCRIP3-CF113.DGN

HERBERT HOOVER DIKE REHABILITATION PROJECT
STRUCTURE REPLACEMENTS

S-291 (IP-3) RECONSTRUCTION

CIVIL

PHASE IV PT I - EMBANKMENT & CHANNEL RECONSTRUCTION GRADING PLAN

DRAWING NO.

C-13

pw:\\COE-SAJPWP02JAX.saj.ds.usace.army.mil:SAJPW\Documents\C&SF\Herbert Hoover Dike Rehabilitation\03-Culvert Rehabilitation\S-292(IP-1), S-290(IP-2), S-291(IP-3) Culvert Reconstruction\070 - Plans\IP-3\05 Civil\C-13

SAFETY ON THIS JOB DEPENDS ON YOU

NOTES:

1. ELEVATIONS ARE IN FEET AND TENTHS AND REFER TO NORTH AMERICAN VERTICAL DATUM 1988 (NAVD).
2. PROPOSED CONTOURS ARE SHOWN IN BOLD, EXISTING CONTOURS ARE SHOWN IN DASHED.
3. NO PORTION OF THE EXISTING EMBANKMENT, EXCEPT SURFACE TREATMENTS SHALL BE DEGRADED OR EXCAVATED UNTIL THE COFFERDAM SYSTEMS ARE IN PLACE, COMPLETE, AND APPROVED BY THE COR. THE EMBANKMENT SHALL NOT BE DEGRADED OUTSIDE THE LIMITS OF THE COFFERDAM.
4. CONTRACTOR SHALL PROVIDE A TURBIDITY CONTROL AND MONITORING PLAN, INCLUDING TURBIDITY BARRIERS PER THE SPECIFICATIONS.

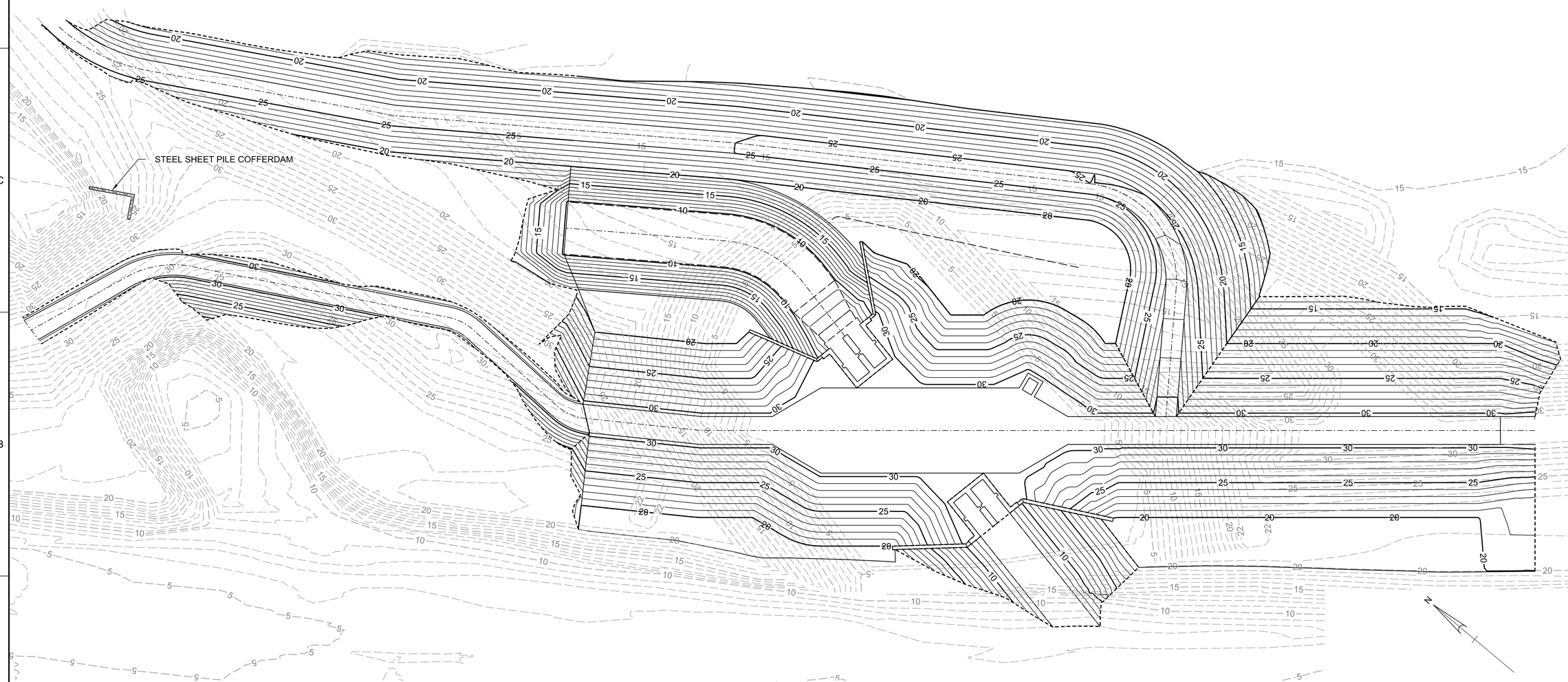

US Army Corps of Engineers, Jacksonville District

No.	SYM	ZONE	DESCRIPTION
N	A-N	ABCD...	

DESIGNED BY: M.J.B. | DATE: JAN 14 2016
DWN BY: M.J.B. | CKD BY: E.G.M. | SOLICITATION NO.: W912EP-16-R-0010
SUBMITTED BY: N/A | CONTRACT NO.: N/A
PLOT SCALE: 1:4 | PLOT DATE: Apr 25, 2016 | FILE NUMBER: N/A
FILE NAME: 114527-HHDRCRIP3-CF114.DGN

DEPARTMENT OF THE ARMY
CORPS OF ENGINEERS
JACKSONVILLE DISTRICT
JACKSONVILLE, FLORIDA

HERBERT HOOVER DIKE REHABILITATION PROJECT
STRUCTURE REPLACEMENTS

S-291 (IP-3) RECONSTRUCTION

CIVIL

PHASE IV PT I - EMBANKMENT & CHANNEL RECONSTRUCTION CONTOUR PLAN

DRAWING NO.

C-14

pw:\\COE-SAJ\PWP02\JAX.saj.ds.usace.army.mil:SAJ\PW\Documents\C&SF\Herbert Hoover Dike Rehabilitation\03-Culvert Reconstruction\070 - Plans\IP-3\05 Civil\C-14

SAFETY ON THIS JOB DEPENDS ON YOU

NUMBER	NORTHING	EASTING	ELEVATION
1.	N 1,002,824.3	E 654,578.4	Elev. 13.0
2.	N 1,002,829.3	E 654,563.7	Elev. 13.0
3.	N 1,002,834.3	E 654,549.2	Elev. 13.0
4.	N 1,002,729.8	E 654,500.0	Elev. 18.0
5.	N 1,002,706.5	E 654,490.8	Elev. 30.5
6.	N 1,002,682.6	E 654,550.6	Elev. 30.5
7.	N 1,002,744.1	E 654,564.5	Elev. 16.3
8.	N 1,002,757.1	E 654,564.7	Elev. 13.0
9.	N 1,002,764.9	E 654,577.5	Elev. 13.0
10.	N 1,002,772.7	E 654,590.4	Elev. 13.0
11.	N 1,002,654.8	E 654,582.0	Elev. 30.5
12.	N 1,002,606.9	E 654,700.4	Elev. 20.0
13.	N 1,002,567.4	E 654,711.2	Elev. 13.0
14.	N 1,002,558.8	E 654,698.9	Elev. 13.0
15.	N 1,002,591.9	E 654,675.5	Elev. 13.0

NUMBER	NORTHING	EASTING	ELEVATION
16.	N 1,002,583.9	E 654,662.8	Elev. 13.0
17.	N 1,002,550.1	E 654,686.7	Elev. 13.0
18.	N 1,002,538.5	E 654,670.4	Elev. 19.5
19.	N 1,002,522.8	E 654,654.2	Elev. 30.5
20.	N 1,002,503.9	E 654,658.5	Elev. 30.5
21.	N 1,002,443.6	E 654,656.0	Elev. 30.7
22.	N 1,002,428.6	E 654,660.2	Elev. 30.5
23.	N 1,002,468.7	E 654,686.0	Elev. 20.0
24.	N 1,002,449.9	E 654,696.5	Elev. 20.0
25.	N 1,002,472.9	E 654,709.2	Elev. 19.5
26.	N 1,002,492.4	E 654,719.4	Elev. 9.7
27.	N 1,002,501.1	E 654,731.7	Elev. 9.7
28.	N 1,002,509.8	E 654,743.9	Elev. 9.7
29.	N 1,002,521.7	E 654,760.7	Elev. 20.0

NOTES:

1. ELEVATIONS ARE IN FEET AND TENTHS AND REFER TO NORTH AMERICAN VERTICAL DATUM 1988 (NAVD).
2. ELEVATIONS SHOWN DEPICT FINISHED GRADE INCLUSIVE OF ALL SURFACE TREATMENTS WITH THE EXCEPTION OF IMPORT RIPRAP OUTSIDE OF INTAKE AND DISCHARGE CHANNEL. SEE SHEET C-23 FOR SURFACING PLAN.
3. PROPOSED CONTOURS ARE SHOWN IN BOLD, EXISTING CONTOURS ARE SHOWN IN DASHED.
4. NO PORTION OF THE EXISTING EMBANKMENT, EXCEPT SURFACE TREATMENTS SHALL BE DEGRADED OR EXCAVATED UNTIL THE COFFERDAM SYSTEMS ARE IN PLACE, COMPLETE, AND APPROVED BY THE COR. THE EMBANKMENT SHALL NOT BE DEGRADED OUTSIDE THE LIMITS OF THE COFFERDAM.
5. CONTRACTOR SHALL PROVIDE A TURBIDITY CONTROL AND MONITORING PLAN, INCLUDING TURBIDITY BARRIERS PER THE SPECIFICATIONS.
6. SEE ELECTRICAL DRAWINGS FOR INSTALLATION DETAILS.

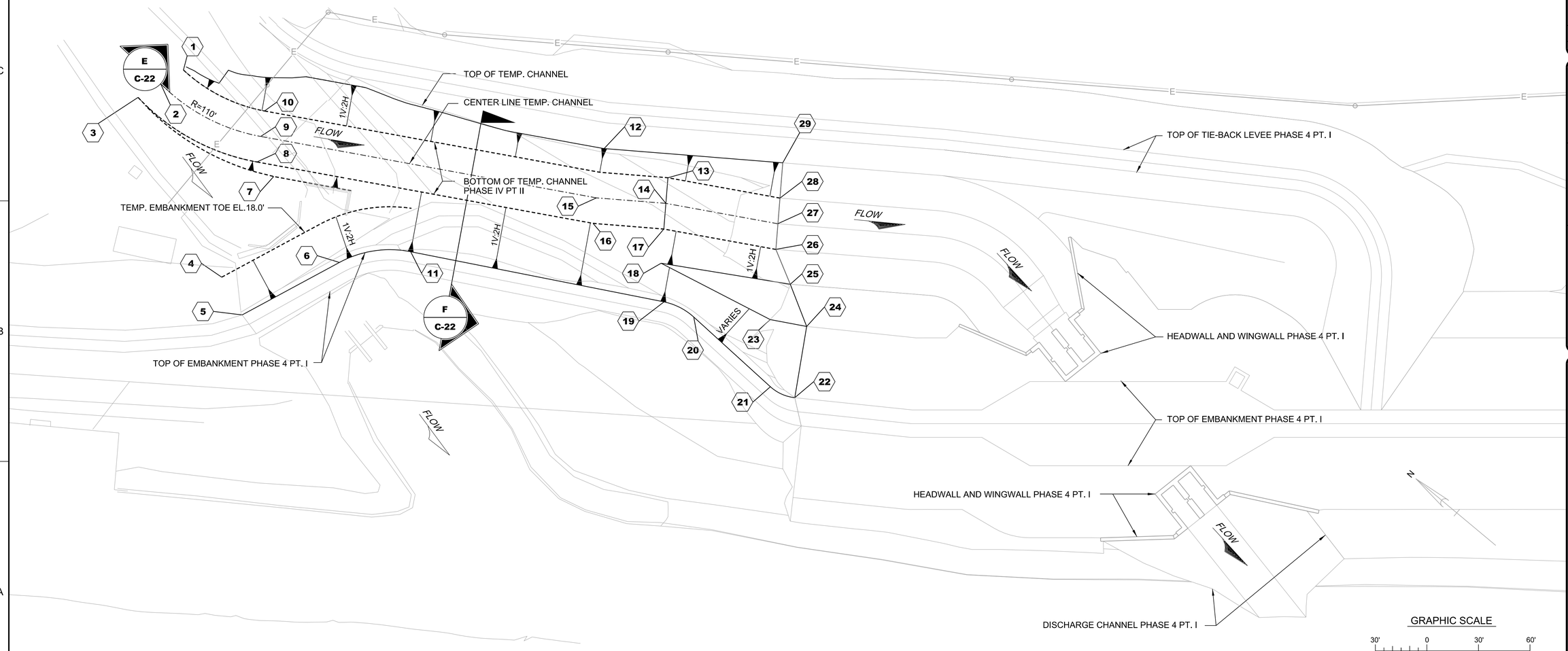

US Army Corps of Engineers
Jacksonville District

No.	STM	ZONE	DESCRIPTION
N	A-N	ABCD...	

DEPARTMENT OF THE ARMY
CORPS OF ENGINEERS
JACKSONVILLE DISTRICT
JACKSONVILLE, FLORIDA

DESIGNED BY: M.J.B. | DATE: DWG BEGUN DATE
DWN BY: M.J.B. | CKD BY: E.D.M. | SOLICITATION NO.: W912EP-16-R-0010
SUBMITTED BY: N/A | CONTRACT NO.: N/A
PLOT SCALE: N/A | PLOT DATE: Apr 25, 2014 | FILE NUMBER: N/A
FILE NAME: 114527-HHDRCRIP3-CF115.DGN

HERBERT HOOVER DIKE REHABILITATION PROJECT
STRUCTURE REPLACEMENTS

S-291 (IP-3) RECONSTRUCTION

CIVIL

PHASE IV PT II - EMBANKMENT & CHANNEL RECONSTRUCTION PLAN

DRAWING NO.

C-15

pw:\\COE-SAJPW\P02JAX.saj.ds.usace.army.mil:SAJPW\Documents\C&SF\Herbert Hoover Dike Rehabilitation\03-Culvert Rehabilitation\S-292(IP-1), S-290(IP-2), S-291(IP-3) Culvert Reconstruction\070 - Plans\IP-3\05 Civil\C-15

SAFETY ON THIS JOB DEPENDS ON YOU

NOTES:

1. ELEVATIONS ARE IN FEET AND TENTHS AND REFER TO NORTH AMERICAN VERTICAL DATUM 1988 (NAVD).
2. PROPOSED CONTOURS ARE SHOWN IN BOLD, EXISTING CONTOURS ARE SHOWN IN DASHED.
3. NO PORTION OF THE EXISTING EMBANKMENT, EXCEPT SURFACE TREATMENTS SHALL BE DEGRADED OR EXCAVATED UNTIL THE COFFERDAM SYSTEMS ARE IN PLACE, COMPLETE, AND APPROVED BY THE COR. THE EMBANKMENT SHALL NOT BE DEGRADED OUTSIDE THE LIMITS OF THE COFFERDAM.
4. CONTRACTOR SHALL PROVIDE A TURBIDITY CONTROL AND MONITORING PLAN, INCLUDING TURBIDITY BARRIERS PER THE SPECIFICATIONS.

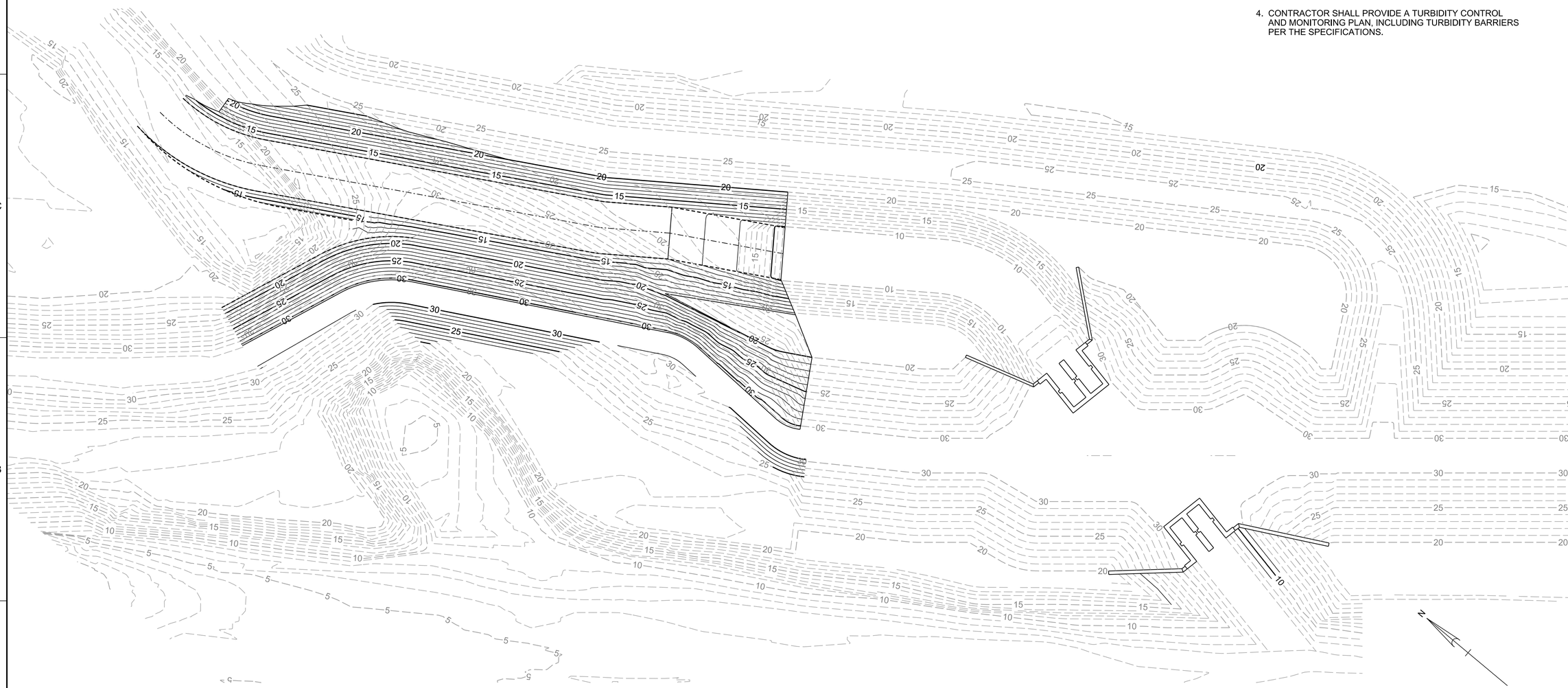

GRAPHIC SCALES

30' 0 30' 60'

US Army Corps of Engineers
Jacksonville District

No.	SYM	ZONE	DESCRIPTION
N	A-N	ABCD...	

DESIGNED BY: M.J.B.
DWN BY: M.J.B.
CKD BY: E.D.M.
SUBMITTED BY: N/A
DATE: DWG BEGUN DATE
SOLICITATION NO.: W912EP-16-R-0010
CONTRACT NO.: N/A
PLOT SCALE: N/A
PLOT DATE: Apr 25, 2016
FILE NUMBER: N/A
FILE NAME: 114527-HHDRCRIP3-CF116.DGN

DEPARTMENT OF THE ARMY
CORPS OF ENGINEERS
JACKSONVILLE DISTRICT
JACKSONVILLE, FLORIDA

HERBERT HOOVER DIKE REHABILITATION PROJECT
STRUCTURE REPLACEMENTS

S-291 (IP-3) RECONSTRUCTION

CIVIL

PHASE IV PT II - EMBANKMENT & CHANNEL RECONSTRUCTION CONTOUR PLAN

DRAWING NO.

C-16

pw:\\COE-SAJPWP02JAX.saj.ds.usace.army.mil:SAJPW\Documents\C&SF\Herbert Hoover Dike Rehabilitation\03-Culvert Rehabilitation\S-292(IP-1), S-290(IP-2), S-291(IP-3) Culvert Reconstruction\070 - Plans\IP-3\05 Civil\C-16

SAFETY ON THIS JOB DEPENDS ON YOU

DEMOLITION AND ABANDONMENT	
1	GROUT EXISTING 2-72 INCH BARRELS.
2	DEMO FLAP GATE AND COMPONENTS.
3	DEMO LAKE AND LAND SIDE WINGWALS.
4	DEMO LAKE AND LAND SIDE HEADWALL FROM TOP OF PIPE TO TOP OF WALL.

NOTES:

1. ELEVATIONS ARE IN FEET AND TENTHS AND REFER TO NORTH AMERICAN VERTICAL DATUM 1988 (NAVD).
2. EXISTING RIPRAP REMOVED TO ACCOMMODATE CONSTRUCTION TO BE STOCKPILED ON SITE FOR GOVERNMENT USE. SEE SHEET G-04 FOR STORAGE AREA.
3. NO PORTION OF THE EXISTING EMBANKMENT SHALL BE DEGRADED OR EXCAVATED UNTIL THE COFFERDAM SYSTEMS ARE IN PLACE, COMPLETE AND APPROVED BY THE COR. THE EMBANKMENT SHALL NOT BE DEGRADED OUTSIDE THE LIMITS OF THE EARTHEN COFFERDAM.
4. REMOVE AND STORE EXISTING GUARDRAIL, FENCE, AND GATE IMPACTED BY S-291 CONSTRUCTION.
5. CONTRACTOR SHALL PROVIDE A TURBIDITY CONTROL AND MONITORING PLAN, INCLUDING TURBIDITY BARRIERS PER THE SPECIFICATIONS.
6. REFER TO STRUCTURAL DRAWINGS FOR ELEVATIONS OF LAKE AND LAND SIDE STEEL SHEET PILE COFFERDAMS.
7. CONTRACTOR SHALL SALVAGE CONTROL BUILDING AND STILLING WELL.
8. SALVAGE LAND SIDE GATES AND ALL COMPONETS.
9. PRIOR TO INSTALLING DRIVEN PILE COFFERDAM, S-291 AND CHANNELS MUST BE COMPLETE AND ACCEPTED BY THE COR.
10. CONTRACTOR SHALL REMOVE MUCK PRIOR TO PLACEMENT OF FILL. SEE SPECIFICATION 00 31 32

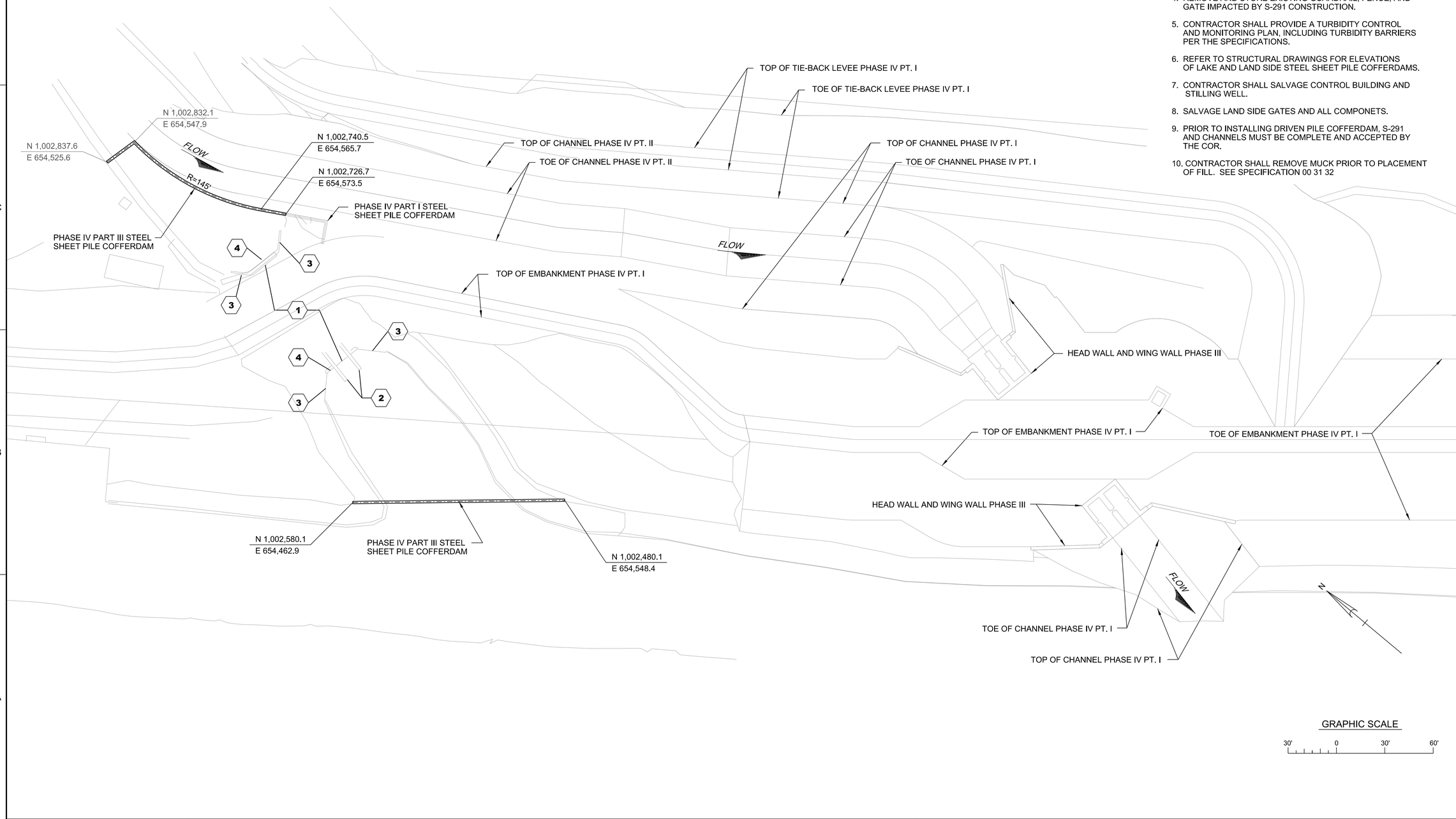

US Army Corps of Engineers
Jacksonville District

No.	SYM	ZONE	DESCRIPTION
N	A	A-N	ABCD...

DESIGNED BY: M.J.B. | DATE: JANUARY 2016
DWN BY: M.J.B. | CKD BY: E.D.M. | SOLICITATION NO.: W912EP-16-R-0010
SUBMITTED BY: N/A | CONTRACT NO.: N/A
PLOT SCALE: AS SHOWN | PLOT DATE: Apr 25, 2016 | FILE NUMBER: N/A
FILE NAME: 114527-HHDRCRIP3-CF117.DGN

DEPARTMENT OF THE ARMY
CORPS OF ENGINEERS
JACKSONVILLE DISTRICT
JACKSONVILLE, FLORIDA

HERBERT HOOVER DIKE REHABILITATION PROJECT
STRUCTURE REPLACEMENTS

S-291 (IP-3) RECONSTRUCTION

CIVIL

PHASE IV PT III - STEEL SHEET PILE COFFERDAM AND CULVERT ABANDONMENT PLAN

DRAWING NO.

C-17

pw:\\COE-SAJPW\P02JAX.saj.ds.usace.army.mil:SAJPW\Documents\C&SF\Herbert Hoover Dike Rehabilitation\03-Culvert Reconstruction\070 - Plans\IP-3\05 Civil\C-17

SAFETY ON THIS JOB DEPENDS ON YOU

NUMBER	NORTHING	EASTING	ELEVATION
1.	N 1,002,811.0	E 654,528.3	Elev. 19.5
2.	N 1,002,817.6	E 654,523.8	Elev. 19.5
3.	N 1,002,815.5	E 654,532.7	Elev. 19.5
4.	N 1,002,831.3	E 654,532.0	Elev. 19.5
5.	N 1,002,827.5	E 654,548.3	Elev. 13.0
6.	N 1,002,815.2	E 654,547.5	Elev. 12.6
7.	N 1,002,811.2	E 654,547.5	Elev. 12.5
8.	N 1,002,811.0	E 654,541.5	Elev. 12.9
9.	N 1,002,737.9	E 654,561.1	Elev. 10.3
10.	N 1,002,731.0	E 654,565.0	Elev. 10.1

NUMBER	NORTHING	EASTING	ELEVATION
11.	N 1,002,734.0	E 654,570.2	Elev. 10.1
12.	N 1,002,729.4	E 654,572.8	Elev. 9.9
13.	N 1,002,713.4	E 654,581.9	Elev. 9.7
14.	N 1,002,703.7	E 654,564.8	Elev. 18.0
15.	N 1,002,719.6	E 654,556.3	Elev. 19.5
16.	N 1,002,721.7	E 654,548.6	Elev. 19.5
17.	N 1,002,728.9	E 654,545.2	Elev. 19.5
18.	N 1,002,623.1	E 654,479.8	Elev. 20.0
19.	N 1,002,542.6	E 654,548.6	Elev. 20.0

NOTES:

1. ELEVATIONS ARE IN FEET AND TENTHS AND REFER TO NORTH AMERICAN VERTICAL DATUM 1988 (NAVD).
2. ELEVATIONS SHOWN DEPICT FINISHED GRADE INCLUSIVE OF ALL SURFACE TREATMENTS WITH THE EXCEPTION OF IMPORT RIPRAP, SEE SECTION "B" SHEET C-18.
3. EXISTING RIPRAP REMOVED TO ACCOMMODATE CONSTRUCTION TO BE STOCKPILED ON SITE FOR GOVERNMENT USE. SEE SHEET G-04 FOR STORAGE / STAGING AREA.
4. NO PORTION OF THE EXISTING EMBANKMENT SHALL BE DEGRADED OR EXCAVATED UNTIL THE COFFERDAM SYSTEMS ARE IN PLACE, COMPLETE AND APPROVED BY THE COR.
5. REMOVE AND STORE EXISTING GUARDRAIL, FENCE, AND GATE IMPACTED BY S-290 CONSTRUCTION.
6. CONTRACTOR SHALL PROVIDE A TURBIDITY CONTROL AND MONITORING PLAN, INCLUDING TURBIDITY BARRIERS PER THE SPECIFICATIONS.
7. REFER TO STRUCTURAL DRAWINGS FOR ELEVATIONS OF STEEL SHEET PILE COFFERDAM.
8. SEE ELECTRICAL DRAWINGS FOR INSTALLATION DETAILS.

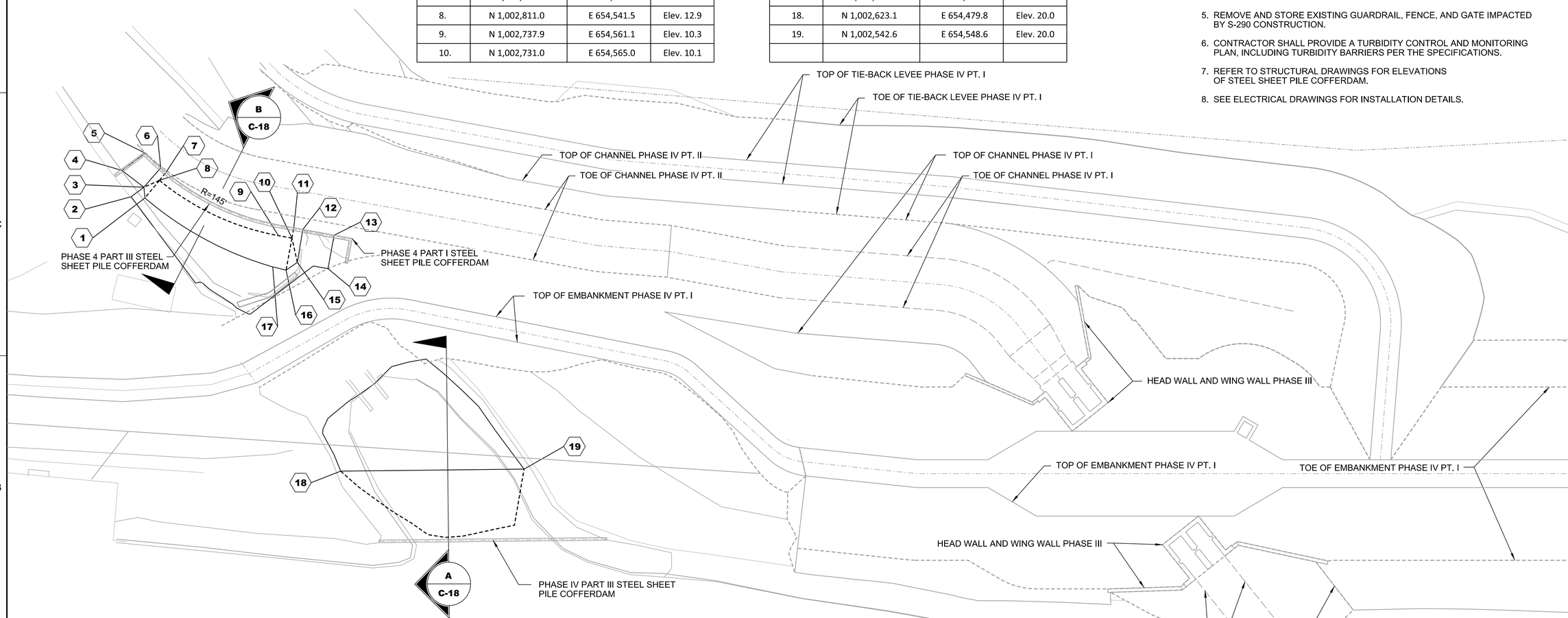

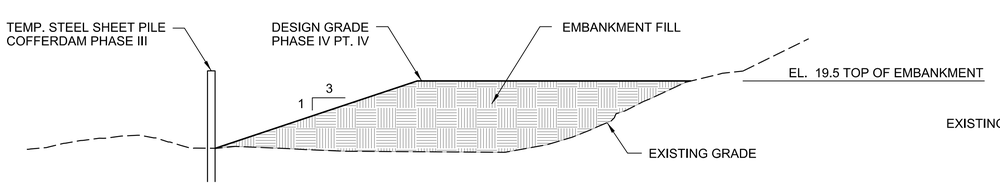

A C-18 **SECTION**
SCALE: A

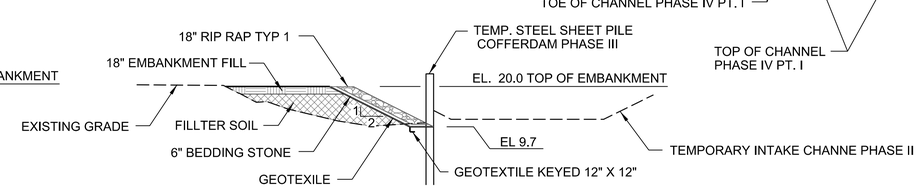

B C-18 **SECTION**
SCALE: A

GRAPHIC SCALE
30' 0 30' 60'

US Army Corps of Engineers
Jacksonville District

No.	SYM	ZONE	DESCRIPTION
N	A	A-N	ABCD...

DEPARTMENT OF THE ARMY
CORPS OF ENGINEERS
JACKSONVILLE DISTRICT
JACKSONVILLE, FLORIDA

DESIGNED BY: M.J.B.
DWN BY: M.J.B.
CKD BY: E.D.M.
SUBMITTED BY: N/A
PLOT SCALE: AS SHOWN
PLOT DATE: Apr 25, 2014
DATE: DWG BEGUN DATE
SOLICITATION NO.: W912EP-16-R-0010
CONTRACT NO.: N/A
FILE NUMBER: N/A
FILE NAME: 114527-HHDRCRIP3-CF118.DGN

HERBERT HOOVER DIKE REHABILITATION PROJECT
STRUCTURE REPLACEMENTS

S-291 (IP-3) RECONSTRUCTION

CIVIL

PHASE IV PT IV - EXISTING CHANNEL BACKFILL SITE PLAN

DRAWING NO.
C-18

pw:\\COE-SAJPWP02JAX.saj.ds.usace.army.mil:SAJPW\Documents\C&SF\Herbert Hoover Dike Rehabilitation\03-Culvert Reconstruction\070 - Plans\IP-3\05 Civil\C-18

SAFETY ON THIS JOB DEPENDS ON YOU

NOTES:

1. ELEVATIONS ARE IN FEET AND TENTHS AND REFER TO NORTH AMERICAN VERTICAL DATUM 1988 (NAVD).
2. PROPOSED CONTOURS ARE SHOWN IN BOLD, EXISTING CONTOURS ARE SHOWN IN DASHED.
3. NO PORTION OF THE EXISTING EMBANKMENT, EXCEPT SURFACE TREATMENTS SHALL BE DEGRADED OR EXCAVATED UNTIL THE COFFERDAM SYSTEMS ARE IN PLACE, COMPLETE, AND APPROVED BY THE COR. THE EMBANKMENT SHALL NOT BE DEGRADED OUTSIDE THE LIMITS OF THE COFFERDAM.
4. CONTRACTOR SHALL PROVIDE A TURBIDITY CONTROL AND MONITORING PLAN, INCLUDING TURBIDITY BARRIERS PER THE SPECIFICATIONS.

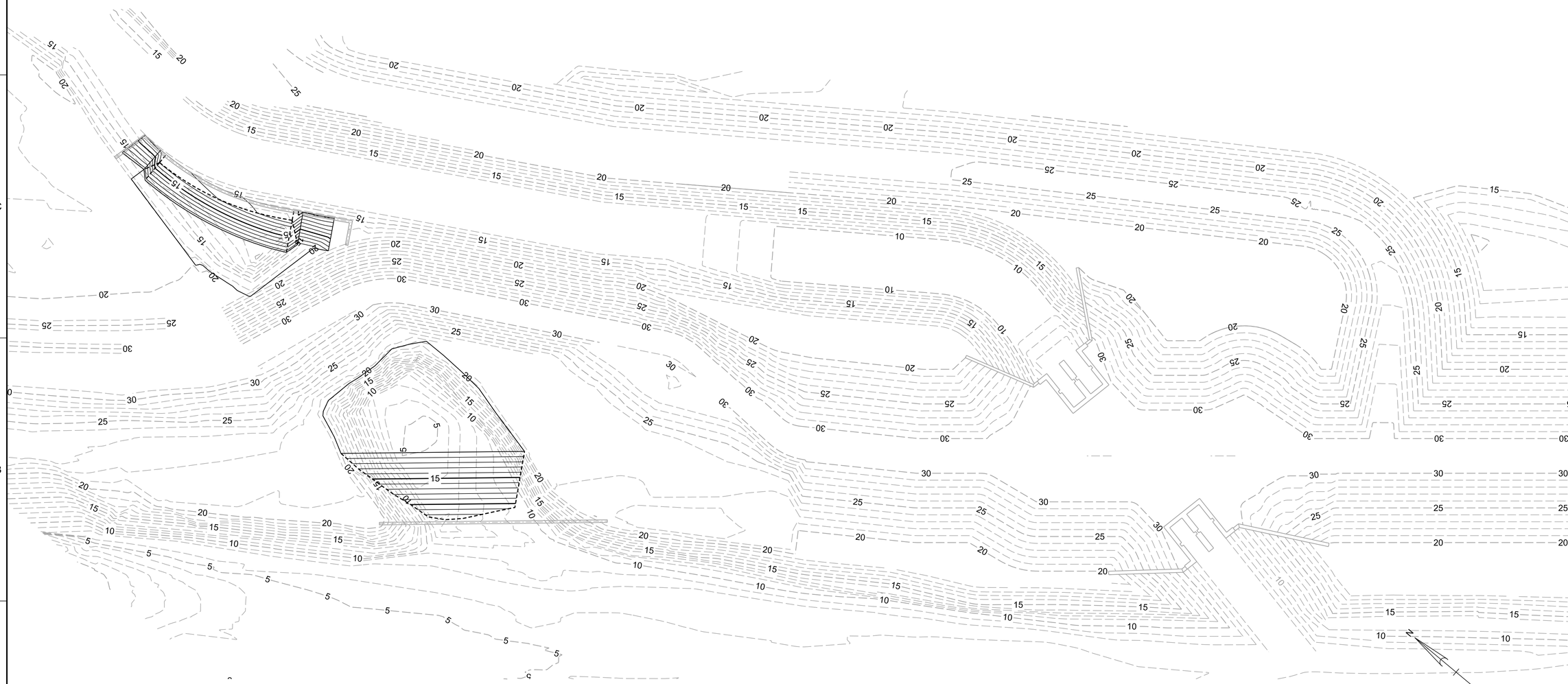

US Army Corps of Engineers
Jacksonville District

No.	SYM	ZONE	DESCRIPTION
N	A-N	ABCD...	

DESIGNED BY: M.J.B.
DWN BY: M.J.B.
CKD BY: E.D.M.
SUBMITTED BY: N/A
DATE: JANUARY 2016
SOLICITATION NO.: W912EP-16-R-0010
CONTRACT NO.: N/A
PLOT SCALE: N/A
PLOT DATE: Apr 25, 2016
FILE NUMBER: N/A
FILE NAME: 114527-HHDRCRIP3-CF119.DGN

DEPARTMENT OF THE ARMY
CORPS OF ENGINEERS
JACKSONVILLE DISTRICT
JACKSONVILLE, FLORIDA

HERBERT HOOVER DIKE REHABILITATION PROJECT
STRUCTURE REPLACEMENTS

S-291 (IP-3) RECONSTRUCTION

C/VIL

PHASE IV PT IV - EXISTING CHANNEL BACKFILL CONTOUR PLAN

DRAWING NO.

C-19

pw:\\COE-SAJPW\P02\JAX.saj.ds.usace.army.mil:SAJPW\Documents\C&SF\Herbert Hoover Dike Rehabilitation\03-Culvert Reconstruction\070 - Plans\IP-3\05 Civil\C-19

SAFETY ON THIS JOB DEPENDS ON YOU

NUMBER	NORTHING	EASTING	ELEVATION
1.	N 1,002,611.0	E 654,472.4	Elev. 21.0
2.	N 1,002,580.9	E 654,460.6	Elev. 20.5
3.	N 1,002,684.0	E 654,389.8	Elev. 20.5
4.	N 1,002,704.8	E 654,387.2	Elev. 20.5
5.	N 1,002,706.0	E 654,408.6	Elev. 21.0
6.	N 1,002,731.8	E 654,446.7	Elev. 30.5
7.	N 1,002,727.3	E 654,440.1	Elev. 30.5
8.	N 1,002,744.7	E 654,428.4	Elev. 32.3
9.	N 1,002,749.2	E 654,435.0	Elev. 32.2
10.	N 1,002,753.7	E 654,441.6	Elev. 32.1
11.	N 1,002,736.2	E 654,453.4	Elev. 30.5
12.	N 1,002,736.4	E 654,503.8	Elev. 20.0
13.	N 1,002,851.4	E 654,531.1	Elev. 19.5
14.	N 1,002,844.6	E 654,551.1	Elev. 13.0

NUMBER	NORTHING	EASTING	ELEVATION
15.	N 1,002,825.9	E 654,563.2	Elev. 12.7
16.	N 1,002,824.3	E 654,578.1	Elev. 12.3
17.	N 1,002,819.1	E 654,592.2	Elev. 19.5
18.	N 1,002,808.5	E 654,613.0	Elev. 20.0
19.	N 1,002,748.4	E 654,619.0	Elev. 19.5
20.	N 1,002,738.8	E 654,602.0	Elev. 9.7
21.	N 1,002,731.4	E 654,588.9	Elev. 9.7
22.	N 1,002,724.0	E 654,575.9	Elev. 9.7
23.	N 1,002,714.3	E 654,558.8	Elev. 19.5
24.	N 1,002,707.3	E 654,643.5	Elev. 20.0
25.	N 1,002,607.5	E 654,700.0	Elev. 20.0
26.	N 1,002,596.1	E 654,682.8	Elev. 9.7
27.	N 1,002,588.0	E 654,670.1	Elev. 9.7
28.	N 1,002,580.1	E 654,657.4	Elev. 9.7

NUMBER	NORTHING	EASTING	ELEVATION
29.	N 1,002,569.3	E 654,641.0	Elev. 19.5
30.	N 1,002,521.7	E 654,760.7	Elev. 20.0
31.	N 1,002,509.8	E 654,743.9	Elev. 9.7
32.	N 1,002,501.1	E 654,731.7	Elev. 9.7
33.	N 1,002,492.4	E 654,719.4	Elev. 9.7
34.	N 1,002,472.0	E 654,709.9	Elev. 19.5
35.	N 1,002,449.8	E 654,696.6	Elev. 20.0
36.	N 1,002,495.2	E 654,693.5	Elev. 19.5
37.	N 1,002,428.6	E 654,660.2	Elev. 30.5
38.	N 1,002,421.8	E 654,655.1	Elev. 30.7
39.	N 1,002,415.1	E 654,650.0	Elev. 30.5
40.	N 1,002,392.0	E 654,614.9	Elev. 20.0
41.	N 1,002,384.4	E 654,603.3	Elev. 19.9
42.	N 1,002,504.0	E 654,539.6	Elev. 20.0

NOTES:

1. ELEVATIONS ARE IN FEET AND TENTHS AND REFER TO NORTH AMERICAN VERTICAL DATUM 1988 (NAVD)
2. ELEVATIONS SHOWN DEPICT FINISHED GRADE INCLUSIVE OF ALL SURFACE TREATMENTS WITH THE EXCEPTION OF IMPORT RIPRAP OUTSIDE OF INTAKE AND DISCHARGE CHANNEL. SEE SHEET C-23 FOR SURFACING PLAN.
3. SEE ELECTRICAL DRAWINGS FOR INSTALLATION DETAILS.
4. SEE STRUCTURE DRAWINGS FOR BUILDING, BUILDING SUPPORT CONCRETE SLAB DETAILS, DETAILS OF S-291 STRUCTURE, AND STILLING WELL PLATFORM.
5. STILLING WELL AND STILLING WELL CONCRETE PAD DETAILS ARE LOCATED ON MECHANICAL DRAWINGS.
6. BOLLARD DETAIL FOUND ON SHEET C-24
7. CONTRACTOR SHALL NOT REMOVE THE STEEL SHEET PILE COFFERDAM UNTIL THE BARRELS HAVE BEEN GROUTED AND SEEPAGE MATERIALS HAVE BEEN INSTALLED, SEE SHEET C-18

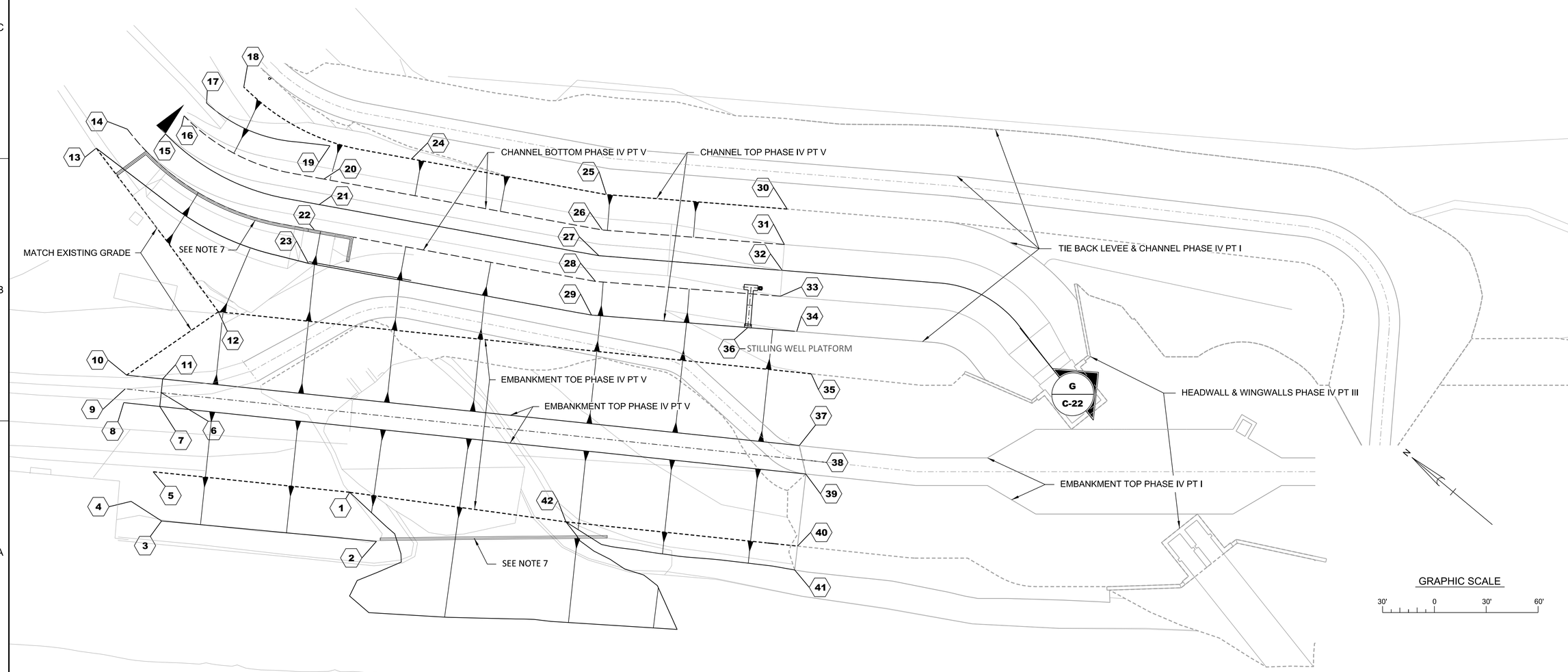

US Army Corps of Engineers
Jacksonville District

No.	SYM	ZONE	DESCRIPTION
N	A	A-N	ABCD...

DESIGNED BY: M.J.B.
DWN BY: M.J.B.
CKD BY: E.D.M.
SUBMITTED BY: N/A
DATE: FEBRUARY 2016
SOLICITATION NO.: W912EP-16-R-0010
CONTRACT NO.: N/A
PLOT SCALE: N/A
PLOT DATE: Apr 25, 2016
FILE NUMBER: N/A
FILE NAME: 114527-HHDRCRIP3-CF120.DGN

DEPARTMENT OF THE ARMY
CORPS OF ENGINEERS
JACKSONVILLE DISTRICT
JACKSONVILLE, FLORIDA

HERBERT HOOVER DIKE REHABILITATION PROJECT
STRUCTURE REPLACEMENTS

S-291 (IP-3) RECONSTRUCTION

CIVIL

PHASE IV PT V - EMBANKMENT & CHANNEL RECONSTRUCTION SITE PLAN

DRAWING NO.

C-20

pw:\\COE-SAJPWP02\JAX.saj.ds.usace.army.mil:SAJPW\Documents\C&SF\Herbert Hoover Dike Rehabilitation\03-Culvert Rehabilitation\S-292(IP-1), S-290(IP-2), S-291(IP-3) Culvert Reconstruction\070 - Plans\IP-3\05 Civil\C-20

SAFETY ON THIS JOB DEPENDS ON YOU

NOTES:

1. ELEVATIONS ARE IN FEET AND TENTHS AND REFER TO NORTH AMERICAN VERTICAL DATUM 1988 (NAVD).
2. PROPOSED CONTOURS ARE SHOWN IN BOLD, EXISTING CONTOURS ARE SHOWN IN DASHED.

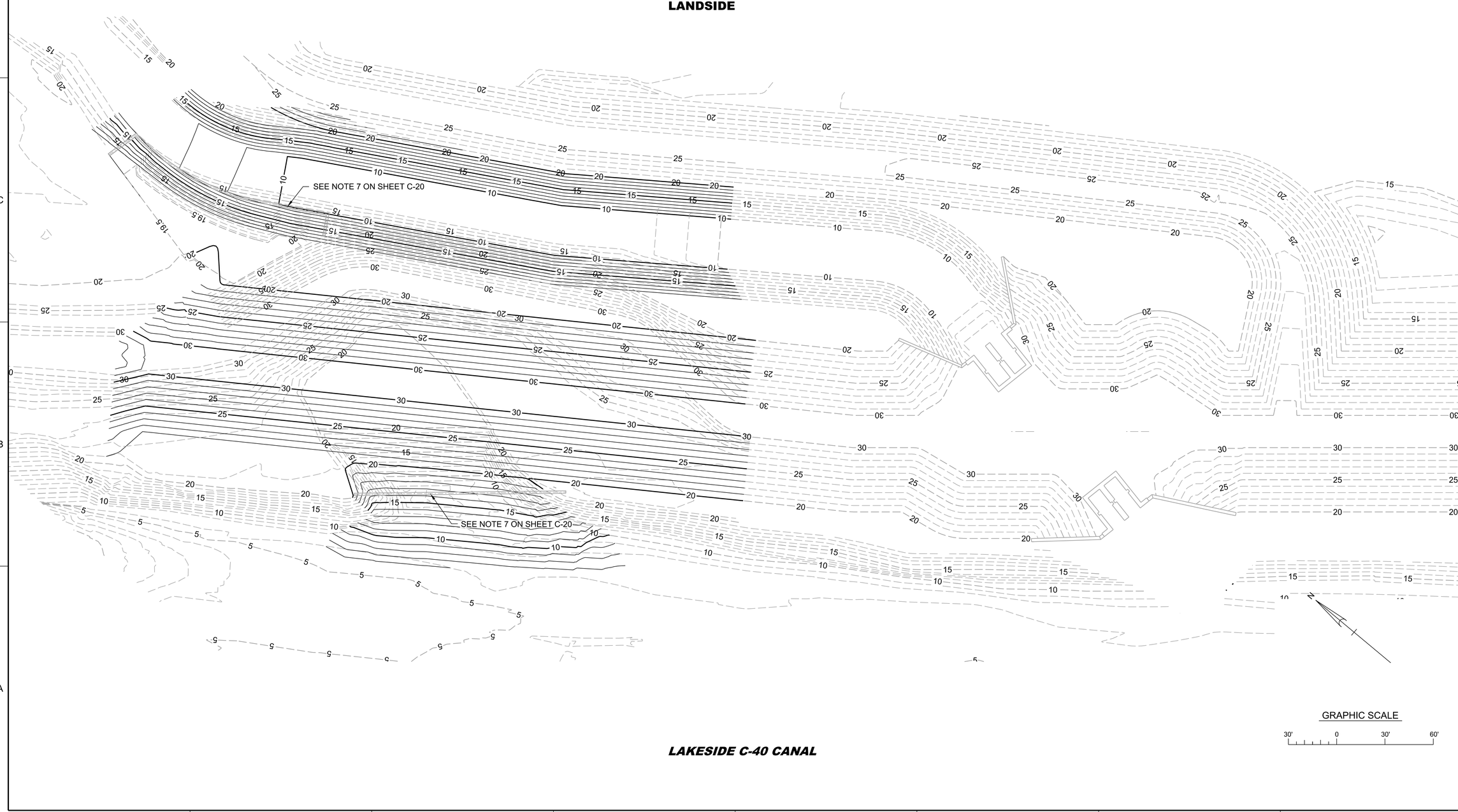

US Army Corps of Engineers
Jacksonville District

No.	STM	ZONE	DESCRIPTION
N	A-N	ABCD...	

DESIGNED BY: M.J.B.
DWN BY: M.J.B.
CKD BY: E.D.M.
SUBMITTED BY: N/A
DATE: JANUARY 2016
SOLICITATION NO.: W912EP-16-R-0010
CONTRACT NO.: N/A
PLOT SCALE: N/A
PLOT DATE: Apr 25, 2016
FILE NUMBER: N/A
FILE NAME: 114527-HHDRCRIP3-CF121.DGN

DEPARTMENT OF THE ARMY
CORPS OF ENGINEERS
JACKSONVILLE DISTRICT
JACKSONVILLE, FLORIDA

HERBERT HOOVER DIKE REHABILITATION PROJECT
STRUCTURE REPLACEMENTS

S-291 (IP-3) RECONSTRUCTION

CIVIL

PHASE IV PT IV - FINAL EMBANKMENT & CHANNEL RECONSTRUCTION CONTOUR PLAN

DRAWING NO.

C-21

pw:\\COE-SAJPWP02.JAX.saj.ds.usace.army.mil:SAJPW\Documents\C&SF\Herbert Hoover Dike Rehabilitation\03-Culvert Rehabilitation\S-292(IP-1), S-290(IP-2), S-291(IP-3) Culvert Reconstruction\070 - Plans\IP-3\05 Civil\C-21

SAFETY ON THIS JOB DEPENDS ON YOU

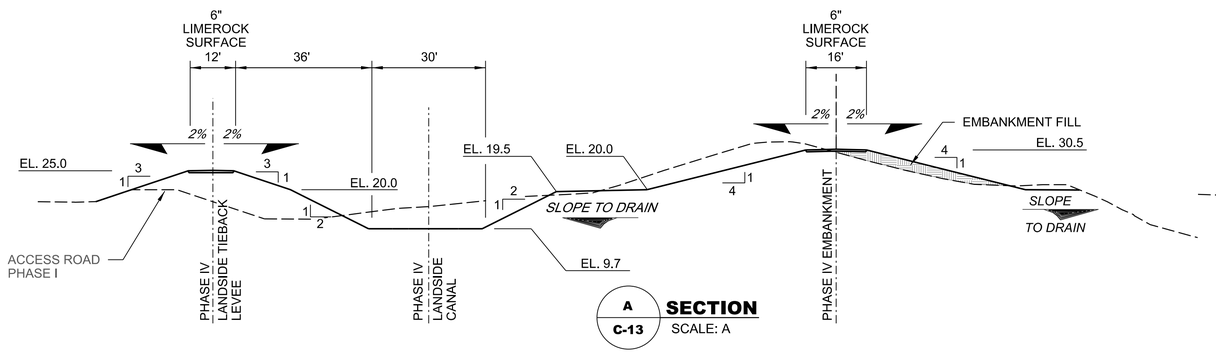

A C-13 **SECTION** SCALE: A

NOTES:

1. REFER TO STRUCTURAL DRAWINGS FOR CONSTRUCTION DETAILS OF STRUCTURES.

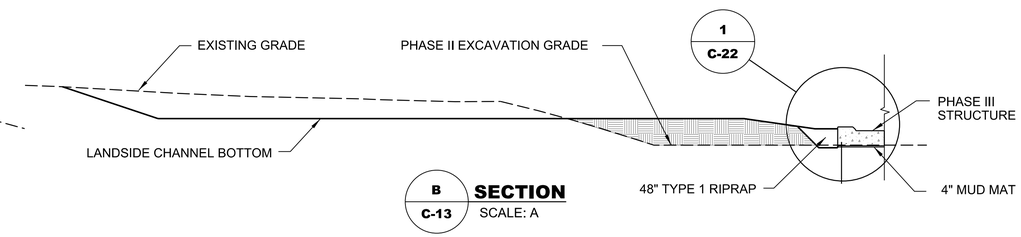

B C-13 **SECTION** SCALE: A

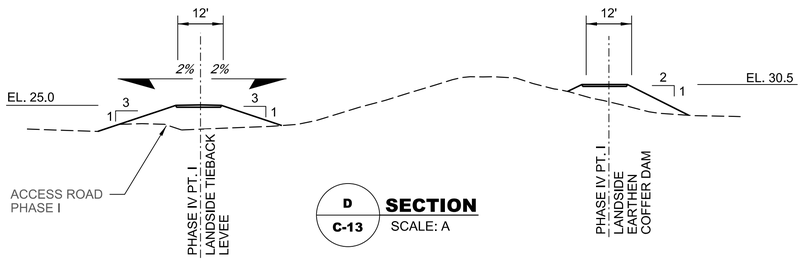

D C-13 **SECTION** SCALE: A

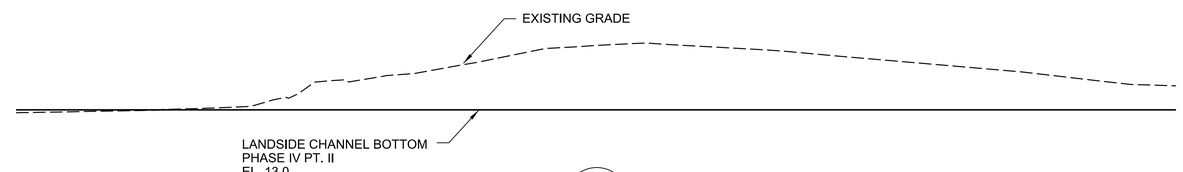

E C-15 **SECTION** SCALE: A

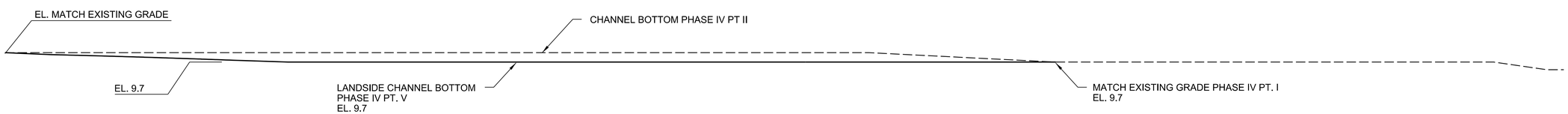

G C-20 **SECTION** SCALE: A

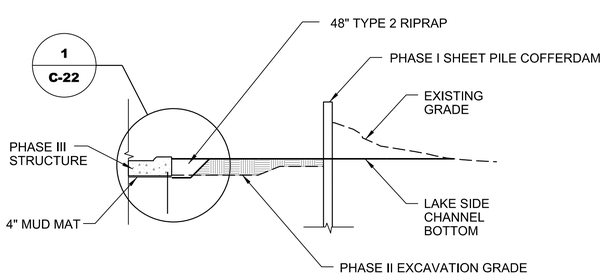

C C-13 **SECTION** SCALE: A

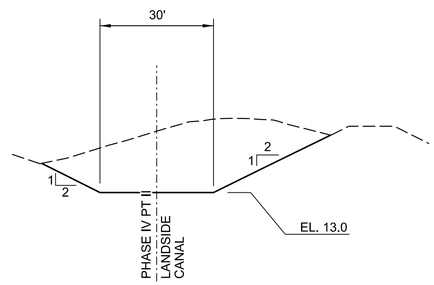

F C-15 **SECTION** SCALE: A

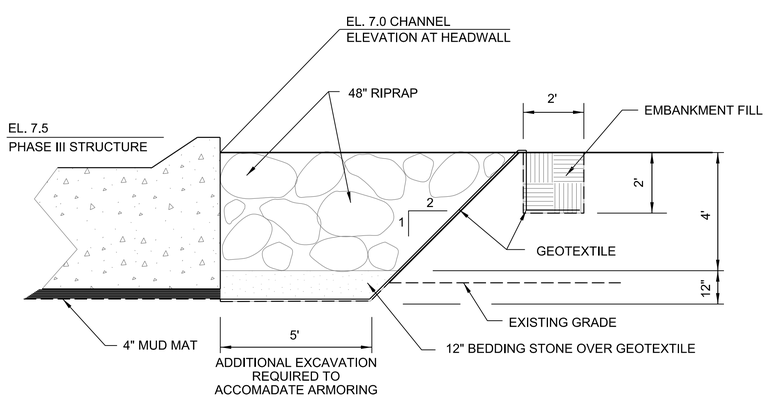

1 C-22 **DETAIL** SCALE: B

GRAPHIC SCALES

A 20' 0 20' 40'

B 2.5' 0 2.5' 5'

US Army Corps of Engineers, Jacksonville District

No.	SYM	ZONE	DESCRIPTION

DEPARTMENT OF THE ARMY
CORPS OF ENGINEERS
JACKSONVILLE DISTRICT
JACKSONVILLE, FLORIDA

DESIGNED BY: M.J.B. | DATE: SEPTEMBER 2015
DWN BY: M.J.B. | CKD BY: E.G.M. | SOLICITATION NO.: W912EP-16-R-0010
SUBMITTED BY: N/A | CONTRACT NO.: N/A
PLOT SCALE: AS SHOWN | PLOT DATE: Apr 25, 2016 | FILE NUMBER: N/A
FILE NAME: 114527-HHDRCRIP3-CF322.DGN

HERBERT HOOVER DIKE REHABILITATION PROJECT
STRUCTURE REPLACEMENTS

S-291 (IP-3) RECONSTRUCTION

CIVIL

PHASE IV - CHANNEL RECONSTRUCTION CROSS SECTIONS AND DETAILS

DRAWING NO.

C-22

pw:\\COE-SAJPWP02JAX.saj.ds.usace.army.mil:SAJPW\Documents\C&SF\Herbert Hoover Dike Rehabilitation\03-Culvert Rehabilitation\S-292(IP-1), S-290(IP-2), S-291(IP-3) Culvert Reconstruction\070 - Plans\IP-3\05 Civil\C-22

SAFETY ON THIS JOB DEPENDS ON YOU

NOTES:

1. AFTER PLACEMENT OF IMPORT RIPRAP ON EMBANKMENT, ANY EXCESS IMPORT RIPRAP SHALL BE STOCKPILED FOR GOVERNMENT USE.
2. SOD ALL DISTURBED AREAS WITHIN THE LIMITS OF CONSTRUCTION, EXCEPT WHERE OTHERWISE NOTED.
3. SOD TO WATERS EDGE WHERE WATER IS ENCOUNTERED.

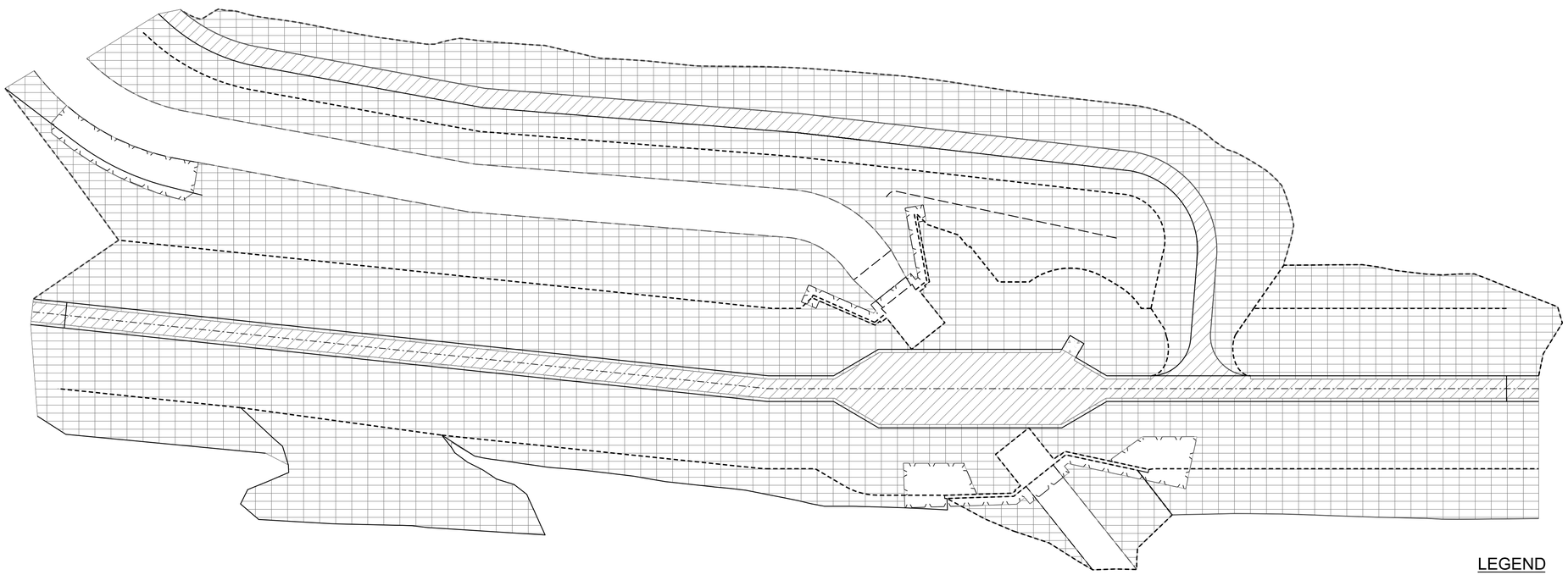

LEGEND

- SOD
- LIMEROCK
- IMPORT RIPRAP
- CONCRETE FOUNDATION

N

GRAPHIC SCALE

40' 0 40' 80'

US Army Corps of Engineers
Jacksonville District

No.	SYM	ZONE	DESCRIPTION

DEPARTMENT OF THE ARMY
CORPS OF ENGINEERS
JACKSONVILLE DISTRICT
JACKSONVILLE, FLORIDA

DESIGNED BY: M.J.B.	DATE: SEPTEMBER 2015
DWN BY: M.J.B.	CKD BY: E.G.M.
SOLICITATION NO.: W912EP-16-R-0010	
SUBMITTED BY: N/A	CONTRACT NO.: N/A
PLOT SCALE: AS SHOWN	PLOT DATE: Apr 25, 2016
FILE NUMBER: N/A	
FILE NAME: 1145 27-HHDRCRIP3-CF123.DGN	

HERBERT HOOVER DIKE REHABILITATION PROJECT
STRUCTURE REPLACEMENTS

S-291 (IP-3) RECONSTRUCTION

CIVIL

PHASE IV - EMBANKMENT RECONSTRUCTION SURFACING PLAN

DRAWING NO.

C-23

pw:\\COE-SAJPWP02JAX.saj.ds.usace.army.mil:SAJPW\Documents\C&SF\Herbert Hoover Dike Rehabilitation\03-Culvert Rehabilitation\S-292(IP-1), S-290(IP-2), S-291(IP-3) Culvert Reconstruction\070 - Plans\IP-3\05 Civil\C-23

SAFETY ON THIS JOB DEPENDS ON YOU

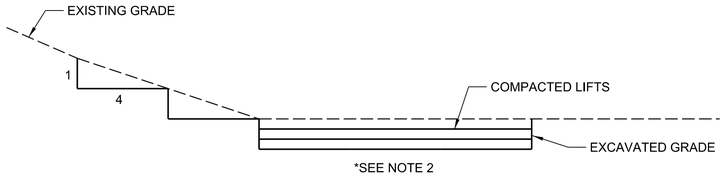

EXISTING BENCH TIE IN OF EXISTING SLOPES AND EMBANKMENT ON SLOPES 1V:4H OR GREATER

N.T.S.

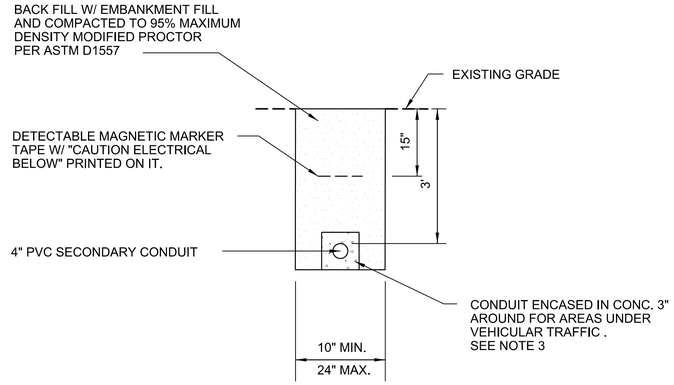

UGS SECONDARY CONDUIT TRENCH DETAIL

N.T.S.

NOTES:

1. ELEVATIONS ARE IN FEET AND TENTHS AND REFER TO NORTH AMERICAN VERTICAL DATUM 1988 (NAVD).
2. ALL CUTS IN EXISTING FOUNDATION AND EMBANKMENT SHALL BE BENCHED AS SHOWN IN DETAIL TO KEY IN EXISTING MATERIAL WITH FILL. NEAT CUT LINES SHOWN FOR PAY PURPOSES ONLY.
3. SEE ELECTRICAL PLANS FOR INSTALLATION DETAILS.

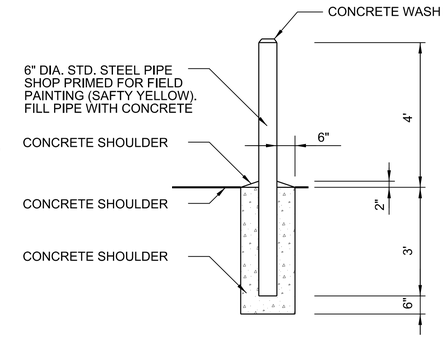

FIXED BOLLARD

N.T.S.

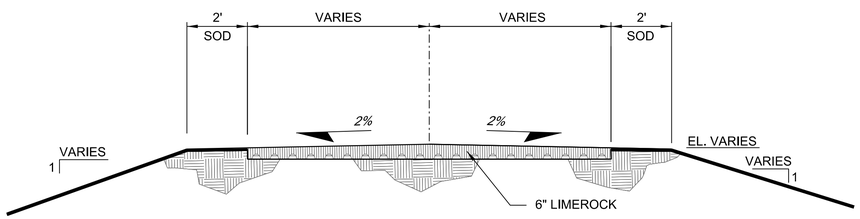

TYPICAL EMBANKMENT CREST SURFACE

N.T.S.

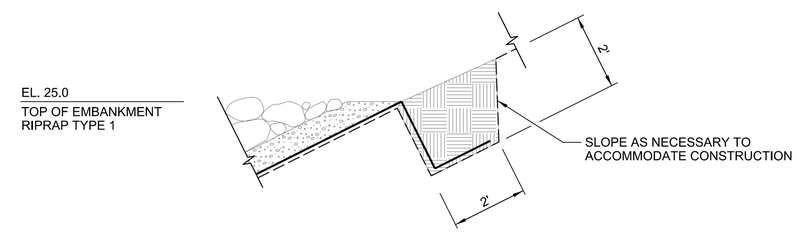

1 / C-24 **DETAIL**

N.T.S.

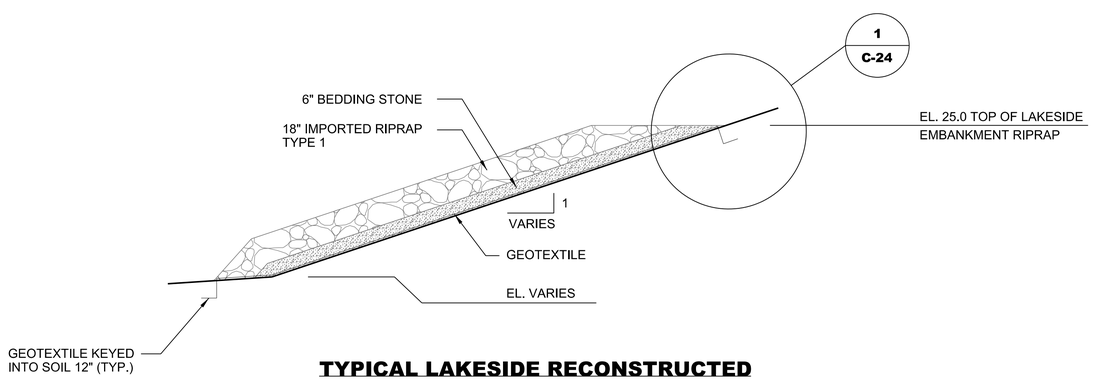

TYPICAL LAKESIDE RECONSTRUCTED EMBANKMENT RIPRAP

N.T.S.

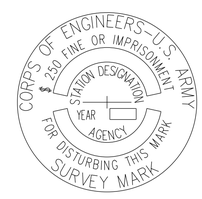

RECESSED LETTERS 3-1/2 INCH DIAMETER BRASS/BRONZE

N.T.S. (SEE STRUCTURAL DRAWINGS FOR PLACEMENT)

US Army Corps of Engineers, Jacksonville District

No.	SYM	ZONE	DESCRIPTION

DEPARTMENT OF THE ARMY
CORPS OF ENGINEERS
JACKSONVILLE DISTRICT
JACKSONVILLE, FLORIDA

DESIGNED BY: M.J.B.	DATE: AUGUST 2015
DWN BY: M.J.B.	CKD BY: E.G.M.
SOLICITATION NO.: W912EP-16-R-0010	
SUBMITTED BY: N/A	CONTRACT NO.: N/A
PLOT SCALE: AS SHOWN	PLOT DATE: Apr 25, 2016
FILE NUMBER: N/A	
FILE NAME: 114527-HHDRCRIP3-CF524.DGN	

HERBERT HOOVER DIKE REHABILITATION PROJECT
STRUCTURE REPLACEMENTS

S-291 (IP-3) RECONSTRUCTION

CIVIL

PHASE IV - EMBANKMENT RECONSTRUCTIOIN DETAILS AND SECTIONS

DRAWING NO.

C-24

pw:\\COE-SAJPWP02JAX.saj.ds.usace.army.mil:SAJPW\Documents\C&SF\Herbert Hoover Dike Rehabilitation\03-Culvert Rehabilitation\S-292(IP-1), S-290(IP-2), S-291(IP-3) Culvert Reconstruction\070 - Plans\IP-3\05 Civil\C-24

SAFETY ON THIS JOB DEPENDS ON YOU

NOTES:

1. SEE ELECTRICAL DRAWINGS FOR METER LOCATION.
2. THE CONTRACTOR SHALL COORDINATE WITH GLADES COUNTY ELECTRIC FOR THE INSTALLATION OF NEW ELECTRICAL SERVICE. POINTS OF CONTACT IS MR. MARK GOODWIN AT 863-946-6216.

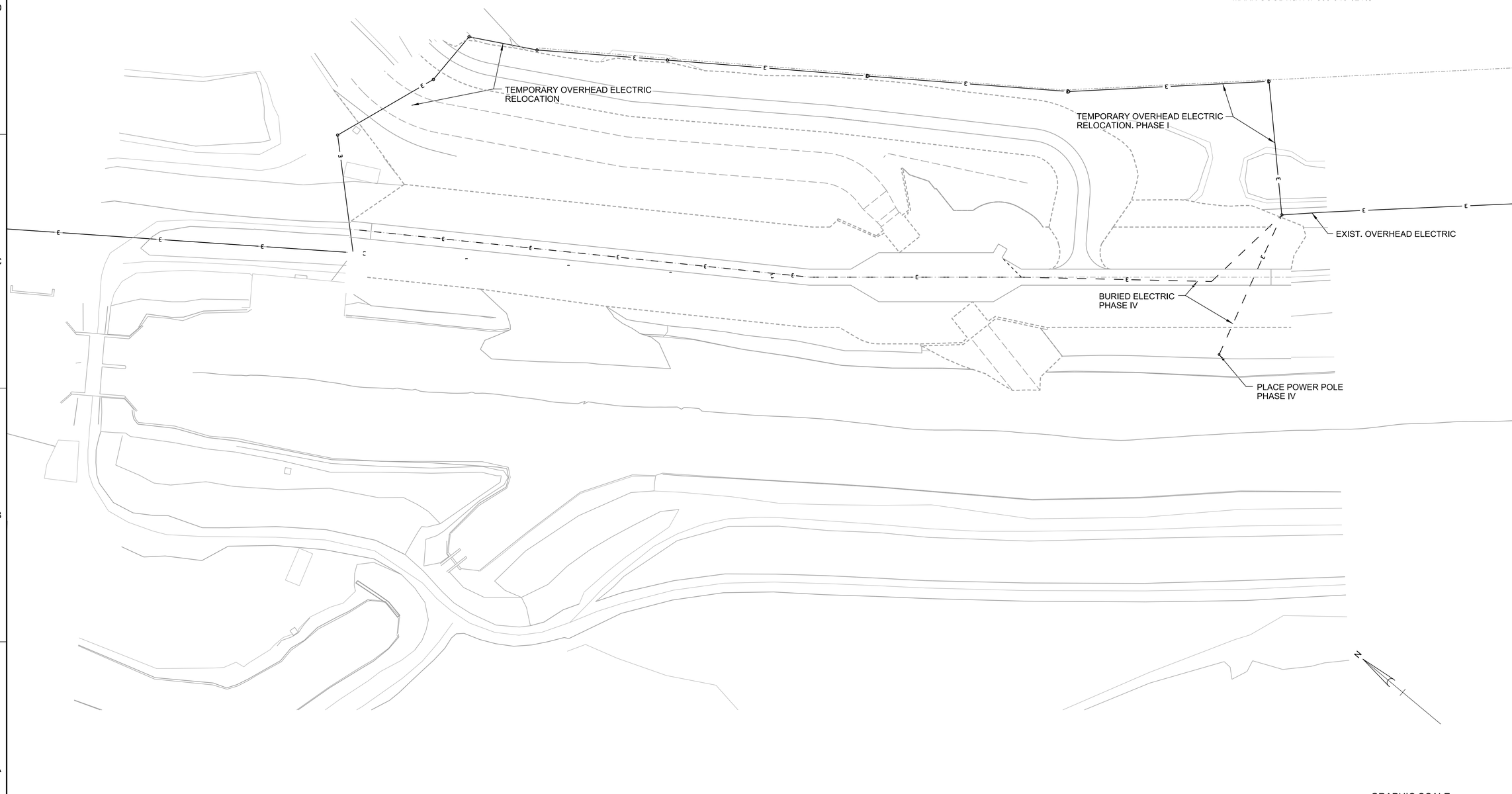

US Army Corps of Engineers
Jacksonville District

No.	SYM	ZONE	DESCRIPTION
N	A-N	ABCD...	

DEPARTMENT OF THE ARMY
CORPS OF ENGINEERS
JACKSONVILLE DISTRICT
JACKSONVILLE, FLORIDA

DESIGNED BY: M.J.B.	DATE: FEBRUARY 2016
DWN BY: M.J.B.	CKD BY: E.G.M.
SOLICITATION NO.: W912EP-16-R-0010	
SUBMITTED BY: N/A	CONTRACT NO.: N/A
PLOT SCALE: AS SHOWN	PLOT DATE: Apr 25, 2016
FILE NUMBER: N/A	
FILE NAME: 114527-HHDRCRIP3-CF125.DGN	

HERBERT HOOVER DIKE REHABILITATION PROJECT
STRUCTURE REPLACEMENTS

S-291 (IP-3) RECONSTRUCTION

CIVIL

PHASE IV - UTILITY PLAN

DRAWING NO.

C-25

pw:\\COE-SAJPWP02\IAX.saj.ds.usace.army.mil:SAJPW\Documents\C&SF\Herbert Hoover Dike Rehabilitation\03-Culvert Rehabilitation\S-292(IP-1), S-290(IP-2), S-291(IP-3) Culvert Reconstruction\070 - Plans\IP-3\05 Civil\C-25

SAFETY ON THIS JOB DEPENDS ON YOU

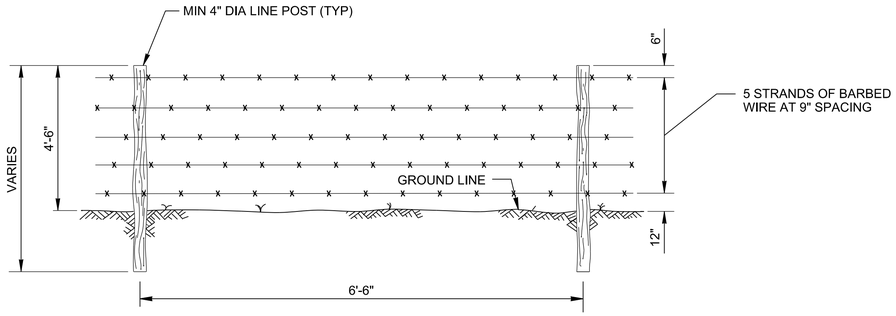

TYPICAL PANEL
N.T.S.

NOTES:

1. THE SPACING OF END OR CORNER PANEL AND BRACE PANEL OF 10' AND 9' IS MAXIMUM. WHEN CORNER OR END PANEL CONFLICTS WITH GATE OR CATTLE GUARD BRACE PANELS, OR TWO CORNER PANELS CONFLICT, BRACING AND SPACING OF POSTS SHALL BE ALTERED TO PROVIDE ADEQUATE BRACING AS REQUIRED.

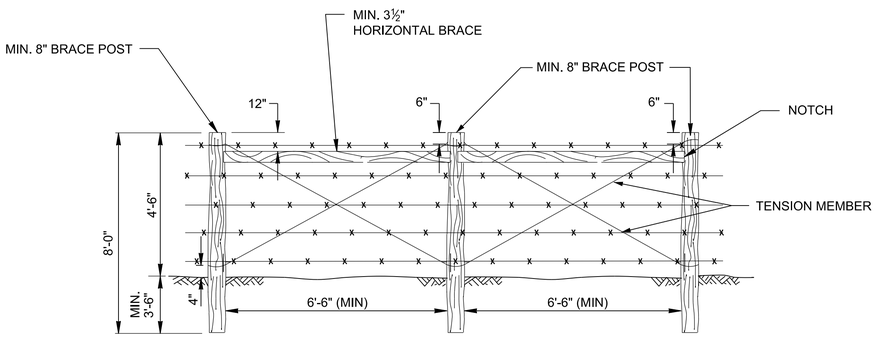

TYPICAL PANEL GATE DETAIL
N.T.S.

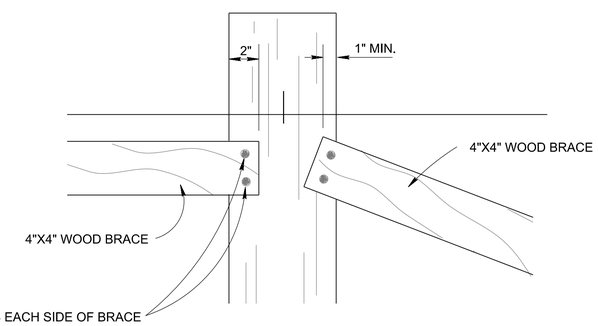

DOUBLE H PULL BRACE
N.T.S.

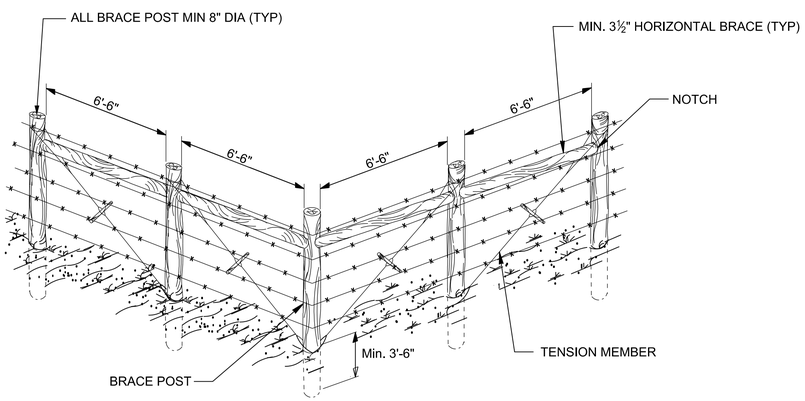

DOUBLE H CORNER BRACE
N.T.S.

DAP DETAIL
N.T.S.

US Army Corps of Engineers
Jacksonville District

No.	SYM	ZONE	DESCRIPTION
N	A-N	ABCD...	

DEPARTMENT OF THE ARMY
CORPS OF ENGINEERS
JACKSONVILLE DISTRICT
JACKSONVILLE, FLORIDA

DESIGNED BY: M.J.B.	DATE: FEBRUARY 2016
DWN BY: M.J.B.	CKD BY: E.G.M.
SOLICITATION NO.: W912EP-16-R-0010	
SUBMITTED BY: N/A	CONTRACT NO.: N/A
PLOT SCALE: AS SHOWN	PLOT DATE: Apr 25, 2016
FILE NUMBER: N/A	
FILE NAME: 114527-HHDRCRIP3-CF526	

HERBERT HOOVER DIKE REHABILITATION PROJECT
STRUCTURE REPLACEMENTS

S-291 (IP-3) RECONSTRUCTION

CIVIL

DETAILS - BARBED WIRE FENCE

DRAWING NO.

C-26

pw:\\COE-SAJPW\P02JAX.saj.ds.usace.army.mil:SAJPW\Documents\C&SF\Herbert Hoover Dike Rehabilitation\03-Culvert Rehabilitation\S-292(IP-1), S-290(IP-2), S-291(IP-3) Culvert Reconstruction\070 - Plans\IP-3\05 Civil\C-26

SAFETY ON THIS JOB DEPENDS ON YOU

COORDINATION

CONTRACTOR SHALL COORDINATE ALL PIPE AND CONDUIT LOCATIONS THROUGH CONCRETE WITH THE ARCHITECTURAL, CIVIL, ELECTRICAL AND MECHANICAL DRAWINGS PRIOR TO PLACING CONCRETE.

GOVERNING DOCUMENTS

WHERE THESE NOTES AND/OR STRUCTURAL DRAWINGS MAY BE IN CONFLICT WITH PROJECT SPECIFICATIONS, PROJECT SPECIFICATIONS SHALL GOVERN.

PRECAUTIONS

ALL CAST-IN-PLACE AND PRECAST CONCRETE STRUCTURES SHALL BE CONSTRUCTED IN THE "DRY". THE GROUND WATER ELEVATIONS SHALL BE MAINTAINED TWO (2) FEET BELOW THE BOTTOM OF FOUNDATION EXCAVATIONS, AT ALL TIMES, DURING CONSTRUCTION AND INSTALLATION OF A GIVEN STRUCTURE. STRUCTURES ARE DESIGNED TO BE FULLY CONSTRUCTED IN DRY CONDITIONS ONLY.

CONTRACTOR SHALL TAKE ALL NECESSARY PRECAUTIONS TO PREVENT FLOATATION OF STRUCTURES UNTIL FULLY CONSTRUCTED AND BACKFILL IS IN PLACE AND COMPACTED.

THE CONTRACTOR IS RESPONSIBLE FOR HIS DEWATERING TECHNIQUES AND FOR MONITORING THE GROUND WATER LEVELS ACCORDINGLY DURING CONSTRUCTION.

CONSTRUCTION LAYOUT

FOR THE ACCURATE LOCATION AND ORIENTATION OF STRUCTURES, REFER TO THE CIVIL DRAWINGS ONLY. STRUCTURAL DRAWINGS DO NOT NECESSARILY SHOW TRUE LOCATION AND/OR ORIENTATION OF STRUCTURES.

STRUCTURAL DESIGN LOADS

THE FOLLOWING LIVE LOADS SERVE AS THE BASIS OF DESIGN, UNLESS OTHERWISE NOTED ON THE DRAWINGS (REFERENCE ASCE 7 (2010)):

ROOFS	50 PSF
GRATING	250 PSF
MAINTENANCE SURCHARGE	300 PSF

THE FOLLOWING WIND LOADS SERVE AS THE BASIS OF DESIGN FOR PRECAST BUILDING UNLESS OTHERWISE NOTED ON THE DRAWINGS:

BASIC WIND SPEED	150 MPH
BUILDING CLASSIFICATIONS	CATEGORY II
EXPOSURE CATEGORY	D
ENCLOSURE CLASSIFICATION	ENCLOSED
MEAN ROOF HEIGHT (h)	9ft - 10in
BUILDING HEIGHT	9ft - 10in
Kzt	1.5

CAST-IN-PLACE CONCRETE

THE CAST- IN- PLACE CONCRETE DESIGN COMPRESSIVE STRENGTH SHALL BE AS FOLLOWS:

HEADWALLS, ENDWALLS, BOX CULVERTS (56 DAY) ..... f'c = 4,000 PSI

PROVIDE ¾ INCH CHAMFER ON ALL EXPOSED CONCRETE CORNERS AND EDGES, UNLESS OTHERWISE NOTED.

CONSTRUCTION, CONTRACTION AND EXPANSION JOINTS SHALL BE AS SHOWN ON THE STRUCTURAL DRAWINGS, UNLESS VARIATIONS ARE DETAILED ON SHOP DRAWINGS AND APPROVED BY THE CONTRACTING OFFICER..
FOR CONSTRUCTION TOLERANCES. SEE SPECIFICATION SECTION 03 31 01 CAST-IN-PLACE STRUCTURAL CONCRETE FOR CIVIL WORKS.

FOR CONCRETE SURFACE REQUIREMENTS. SEE SPECIFICATION SECTION 03 31 01 CAST-IN-PLACE STRUCTURAL CONCRETE FOR CIVIL WORKS.

FOR CONSTRUCTION JOINT TREATMENT. SEE SPECIFICATION SECTION 03 31 01 CAST-IN-PLACE STRUCTURAL CONCRETE FOR CIVIL WORKS.

OPERATING AND CONDUIT FLOOR SLABS SHALL RECEIVE A TROWEL FINISH.

FOR BOND BREAKER, JOINT SEALANT, AND JOINT MATERIAL SPECIFICATIONS, REFER TO SPECIFICATIONS, SECTION 03 15 00, CONCRETE ACCESSORIES.

CONCRETE FINISHES:

CLASS B FINISH SHALL BE USED FOR ALL SURFACES EXPOSED TO VIEW INCLUDING BOTH THE INTERIOR AND EXTERIOR SURFACES OF ALL WATER CONTAINING STRUCTURES AND BUILDINGS.

CLASS D FINISH SHALL BE USED FOR ALL SURFACES TO BE BACKFILLED AND NOT EXPOSED TO VIEW.

WHERE THE ABOVE DOES NOT SPECIFICALLY DEFINE IT. A CLASS B FINISH SHALL BE USED.

PRECAST CONCRETE BUILDING:

THE 28-DAY PRECAST BUILDING CONCRETE COMPRESSIVE STRENGTH SHALL BE 5,000 PSI. MINIMUM COVER FOR WALLS MANUFACTURED UNDER PLANT CONDITIONS SHALL BE 1 INCH.

REINFORCEMENT FOR CAST-IN-PLACE CONCRETE

ALL REINFORCING BARS SHALL CONFORM TO ASTM A615, GRADE 60.

CLEAR COVER SHALL BE 4 INCHES FOR SECTIONS GREATER THAN OR EQUAL TO 24 INCHES IN THICKNESS.

CLEAR COVER SHALL BE 3 INCHES FOR SECTIONS GREATER THAN 12 INCHES BUT LESS THAN 24 INCHES IN THICKNESS.

CLEAR COVER SHALL BE 2 INCHES FOR SECTIONS 12 INCHES OR LESS IN THICKNESS.

OTHER COVER REQUIREMENTS ARE SHOWN ON THE STRUCTURAL DRAWINGS.

BAR BENDING AND PLACEMENT DETAILS SHALL CONFORM TO ACI 315, 318 AND SP-66.

LAP SPLICES SHALL BE CLASS B AND CONFORM TO THE TABLE SHOW ON THIS SHEET.
FOR DIFFERENT BAR SIZES, THE SPLICE LENGTH SHALL BE BASED ON THE SMALLER BAR SIZE.

* EMBEDMENT LENGTHS SHALL BE IN CONFORMANCE WITH THE REINFORCEMENT LENGTH TABLES SHOW ON THIS SHEET. ALL TOP BARS (BARS WITH MORE THAN 12 INCHES OF CONCRETE BELOW THE BAR) SHALL HAVE THE EMBEDMENT LENGTH AND LAP SPLICE LENGTH SPECIFIED IN THE REINFORCEMENT LENGTH TABLES INCREASED BY A FACTOR OF 1.3.

REINFORCING BARS SHALL BE CONTINUOUS AT ALL CORNERS UNLESS OTHERWISE NOTED.

REINFORCEMENT PARALLELING CONSTRUCTION JOINTS SHALL HAVE A MINIMUM OF 2 INCHES OF CLEAR COVER.

THE FIRST AND LAST BARS IN WALLS AND SLABS, STIRRUPS IN BEAMS AND TIES IN COLUMNS ARE TO START AND END AT A MAXIMUM OF ONE HALF OF THE ADJACENT BARS SPACING. BAR SPACING SHOWN ON DRAWINGS ARE MAXIMUM SPACING DIMENSIONS.

CONNECTIONS:

FURNISH BOLTS WITH ONE NUT AND TWO WASHERS UNLESS OTHERWISE NOTED. GALVANIZE BOLTS, NUTS, WASHERS AND MISCELLANEOUS HARDWARE, UNLESS OTHERWISE NOTED.

ALL STRUCTURAL BOLTS SHALL BE HIGH STRENGTH ASTM A325 TYPE N, UNLESS OTHERWISE NOTED.

ANCHOR BOLTS SHALL BE ASTM F593 TYPE 316SS, UNLESS OTHERWISE NOTED.

ALL STRUCTURAL WELDING SHALL USE E70XX ELECTRODES AS SPECIFIED IN AWS D1.1, UNLESS OTHERWISE NOTED.

ALL SHEET METAL WELDING SHALL USE E60XX ELECTRODES AS SPECIFIED IN AWS D1.3 UNLESS OTHERWISE NOTED.

ALL STAINLESS STEEL WELDING SHALL USE E3XXL AS SPECIFIED IN AWS 1.6, STRUCTURAL WELDING CODE-STAINLESS STEEL.

HEADED CONCRETE ANCHORS:

HEADED CONCRETE ANCHORS SHALL CONFORM TO ASTM A 108, UNLESS DESIGNATED STAINLESS STEEL. ANCHOR DIAMETERS SHALL BE MINIMUM OF ¾" INCH DIAMETER UNLESS OTHERWISE NOTED. ANCHORS SHALL BE AUTOMATICALLY END WELDED IN THE SHOP OR FIELD WITH EQUIPMENT RECOMMENDED BY THE MANUFACTURER.

GALVANIZED ITEMS

GALVANIZED ITEMS SHALL BE GALVANIZED AFTER FABRICATION. WHERE GALVANIZED ITEMS LOSE THEIR COATING DUE TO FIELD WELDING OR CHIPPING, MAKE GALVANIZING REPAIRS IN ACCORDANCE WITH THE PROJECT SPECIFICATIONS.

STRUCTURAL STEEL

ALL STEEL WIDE FLANGE SHAPES AND CHANNELS, ANGLES, BARS, AND PLATES, ETC. SHALL CONFORM TO ASTM A 572, GRADE 50, UNLESS OTHERWISE NOTED.

ALL STRUCTURAL STEEL TUBES SHALL BE ASTM A500, GRADE C, UNLESS OTHERWISE NOTED.

ALL STRUCTURAL STEEL PIPES SHALL BE ASTM A53, GRADE B, UNLESS OTHERWISE NOTED.

SYMBOLS ARE BASED ON ASME Y14.5M, DIMENSIONING AND TOLERANCING.

REINFORCEMENT LENGTH TABLE (f'c = 4,000 PSI)

BAR SIZE/LENGTH	3	4	5	6	7	8	9	10	11
STANDARD HOOK EMBEDMENT	6"	6¾"	8½"	10"	11¾"	13½"	15"	17"	18¾"
BAR EXTENSION BEYOND HOOK (90°)	4½"	6"	7½"	9"	10½"	12"	13½"	15¼"	17"
LAP SPLICE *	19"	25"	31"	37"	54"	62"	70"	79"	87"
BAR EMBEDMENT *	14"	19"	24"	29"	42"	48"	54"	61"	67"

REINFORCEMENT LENGTH TABLE (f'c = 2,500 PSI)

BAR SIZE/LENGTH	3	4	5	6	7	8	9	10	11
LAP SPLICE *	23"	31"	39"	47"	68"	78"	88"	99"	110"
BAR EMBEDMENT *	18"	24"	30"	36"	53"	60"	68"	76"	85"

STRUCTURAL AND ARCHITECTURAL ABBREVIATIONS

&	AND
@	AT
AB	ANCHOR BOLT
AFF	ABOVE FINISHED FLOOR
AL / ALUM	ALUMINUM
ANSI	AMERICAN NATIONAL STANDARDS INSTITUTE
ASTM	AMERICAN SOCIETY FOR TESTING MATERIALS
AWG	AMERICAN WIRE GAGE
AWS	AMERICAN WELDING SOCIETY
APPROX	APPROXIMATE
ARCH	ARCHITECTURAL
BD	BOARD
BLDG	BUILDING
BW	BOTH WAYS
CI	CAST IRON
CIPC	CAST IN PLACE CONCRETE
CJ	CONSTRUCTION JOINT
CL	CENTERLINE
CLJ	CONTROL JOINT
CMP	CORRUGATED METAL PIPE
CMU	CONCRETE MASONRY UNIT
CNJ	CONTRACTION JOINT
COL	COLUMN
CONC	CONCRETE
CONST	CONSTRUCTION
CONT	CONTINUOUS
CRES	CORROSION RESISTANT STEEL
DET	DETAIL
DIA / Ø	DIAMETER
DWG	DRAWING
DWL	DOWEL
EA	EACH
EF	EACH FACE
EJ	EXPANSION JOINT
EW	EACH WAY
EL / ELEV	ELEVATION
EMB	EMBEDMENT
FDN	FOUNDATION
FG	FINISH GRADE
FOC	FACE OF CONCRETE
FOS	FACE OF STUD
FT	FEET
F'C	COMPRESSIVE STRESS FOR CONCRETE
GAL	GALLON
GALV	GALVANIZED
GYP	GYPSUM
HORIZ	HORIZONTAL
HTS	HEIGHTS
ID	INSIDE DIAMETER
INFO	INFORMATION
JT	JOINT
LBS	POUNDS
LG	LONG
MAX	MAXIMUM
MECH	MECHANICAL
MFR	MANUFACTURER
MK.	MARK
MIN	MINIMUM
MISC	MISCELLANEOUS
MPH	MILES PER HOUR
N	NORTH
NO.	NUMBER
N.T.S.	NOT TO SCALE
NAVD	NORTH AMERICAN VERTICAL DATUM
NEG	NEGATIVE
NS	NEARSIDE
OC	ON CENTER
OD	OUTSIDE DIAMETER
PCC	PRECAST CONCRETE
PL	PLATE
PNL	PANEL
POS	POSITIVE
PSF	POUNDS PER SQUARE FOOT
PSI	POUNDS PER SQUARE INCH
PVC	POLYVINYL CHLORIDE
R	RADIUS
REINF	REINFORCEMENT
REQ'D	REQUIRED
RND	ROUND
SCHD	SCHEDULE
SEC	SECOND
SECT	SECTION
SF	SQUARE FEET
SHT	SHEET
SIM	SIMILAR
SQ	SQUARE
SST	STAINLESS STEEL
STA	STATION
STD	STANDARD
STL	STEEL
SYM	SYMBOL
SYMM	SYMMETRICAL
THK	THICKNESS
TOB	TOP OF BEARING
TOS	TOP OF STEEL
TSL	TOP OF SLAB
TYP	TYPICAL
T/B	TOP AND BOTTOM
WP	WORKING POINT
WT	WEIGHT
W/	WITH
WF	WIDE FLANGE
WWF	WELDED WIRE FABRIC

US Army Corps of Engineers
Jacksonville District

No.	STM	ZONE	DESCRIPTION
N	A-N	ABCD...	

DEPARTMENT OF THE ARMY
CORPS OF ENGINEERS
JACKSONVILLE DISTRICT
JACKSONVILLE, FLORIDA

DESIGNED BY: C.B.G. | DATE: MARCH 2015
DWN BY: W.E.S. | CKD BY: J.S.F. | SOLICITATION NO.: W912EP-16-R-0010
SUBMITTED BY: N/A | CONTRACT NO.: N/A
PLOT SCALE: 1:1 | PLOT DATE: Apr 25, 2016 | FILE NUMBER: N/A
FILE NAME: 114527-HHDRCRIP3-S-001.DGN

HERBERT HOOVER DIKE REHABILITATION PROJECT
STRUCTURE REPLACEMENTS
S-291 (IP-3) RECONSTRUCTION
STRUCTURAL
GENERAL NOTES

DRAWING NO.
S-01

pw:\\COE-SAJPWP02.JAX.saj.ds.usace.army.mil:SAJPW\Documents\C&SF\Herbert Hoover Dike Rehabilitation\03-Culvert Rehabilitation\S-292(IP-1), S-290(IP-2), S-291(IP-3) Culvert Reconstruction\070 - Plans\IP-3\07 Structures\S-01

SAFETY ON THIS JOB DEPENDS ON YOU

NOTES:

1. FOR WORKING POINT (WP) COORDINATES, SEE DWG NO. C-09.
2. 4" MUD MAT NOT SHOWN IN S-DRAWINGS, BUT SHALL BE PLACED UNDER HEADWALL, CULVERT, AND WINGWALLS.
3. FOR CAMERA POLE DETAIL REFER TO DWG NO. T-07.

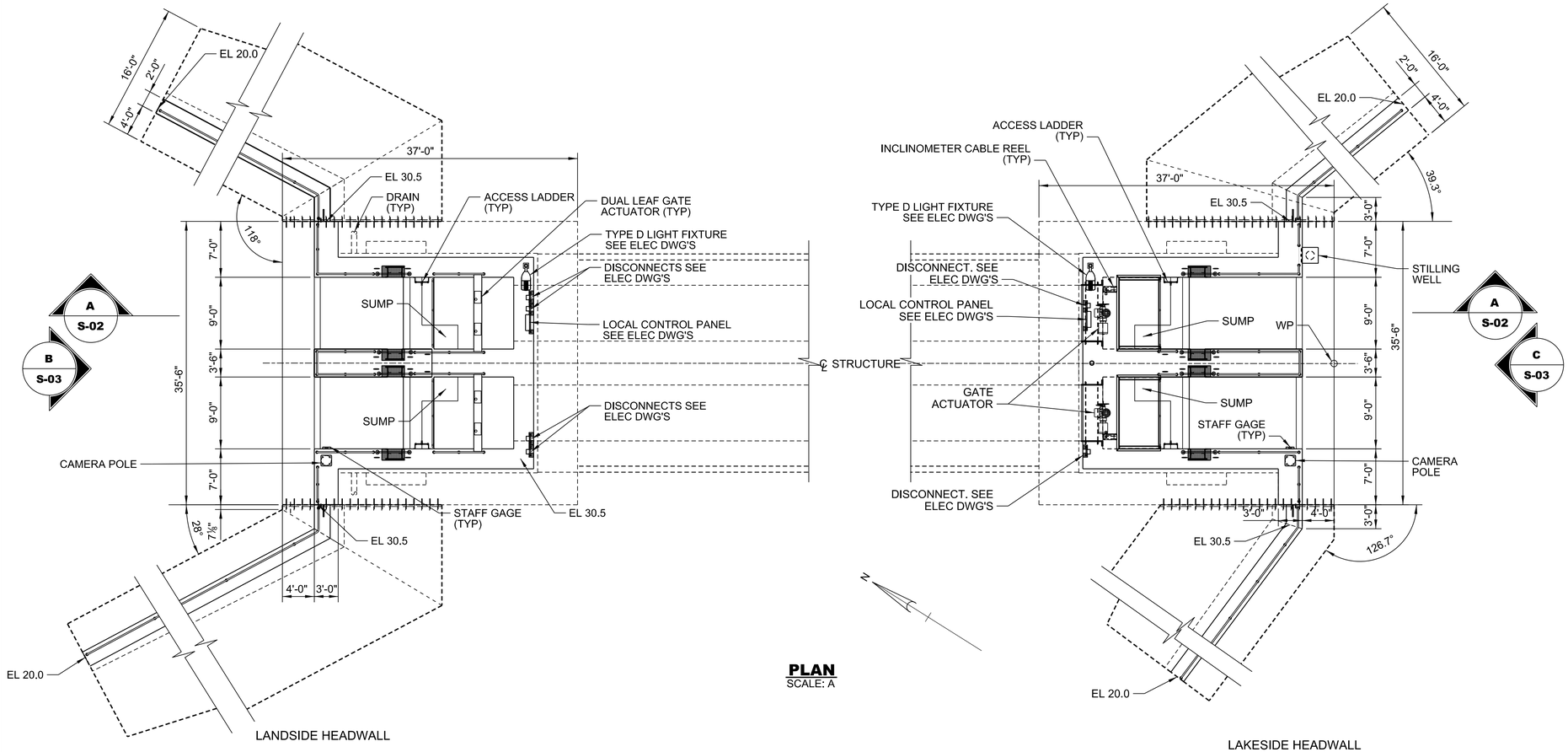

PLAN
SCALE: A

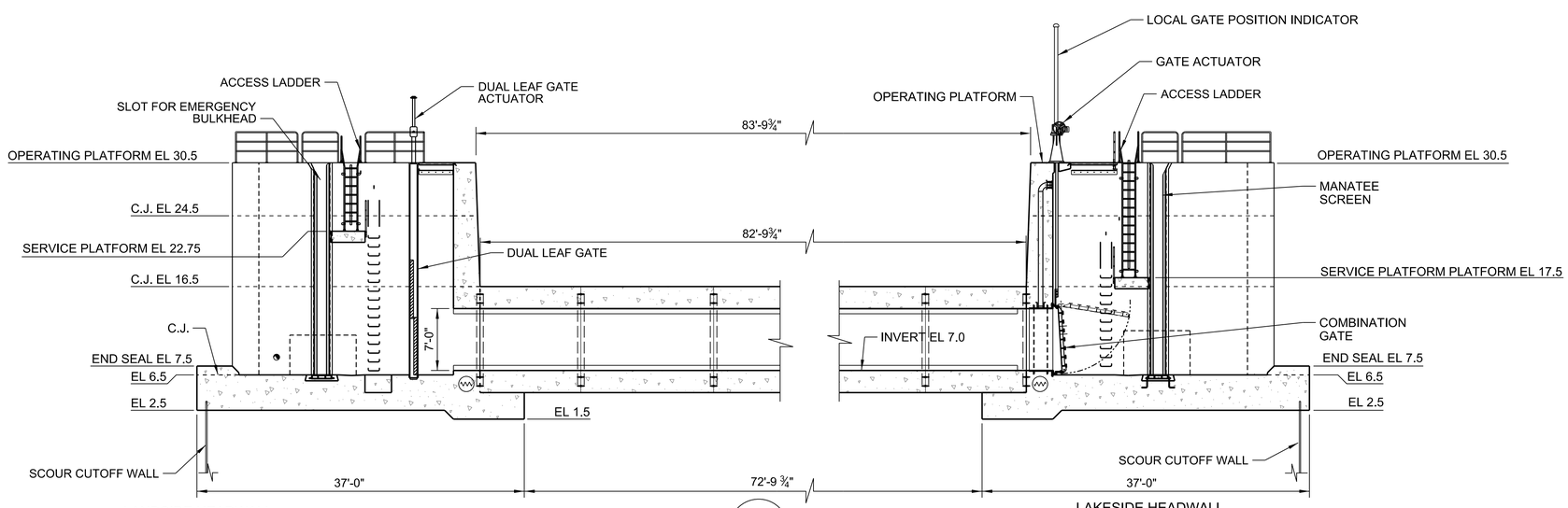

A S-02 **SECTION**
SCALE: A

GRAPHIC SCALE
"A" 48" 24" 0 4' 8' 12' 16' 20'

US Army Corps of Engineers, Jacksonville District

No.	SYM	ZONE	DESCRIPTION
N	A	A-N	ABCD...

DEPARTMENT OF THE ARMY
CORPS OF ENGINEERS
JACKSONVILLE DISTRICT
JACKSONVILLE, FLORIDA

DESIGNED BY: C.B.G.		DATE: MARCH 2015	
DWN BY: W.E.S.	CKD BY: J.S.F.	SOLICITATION NO.: W912EP-16-R-0010	
SUBMITTED BY: N/A		CONTRACT NO.: N/A	
PLOT SCALE: AS SHOWN	PLOT DATE: Apr 25, 2016	FILE NUMBER: N/A	
FILE NAME: 114527-HHDRCRIP3-SS102.DGN			

HERBERT HOOVER DIKE REHABILITATION PROJECT
STRUCTURE REPLACEMENTS

S-291 (IP-3) RECONSTRUCTION
STRUCTURAL
GENERAL PLAN AND PROFILE

DRAWING NO.
S-02

pw:\\COE-SAJPW\P02JAX.saj.ds.usace.army.mil:SAJPW\Documents\C&SF\Herbert Hoover Dike Rehabilitation\03-Culvert Rehabilitation\S-292(IP-1), S-290(IP-2), S-291(IP-3) Culvert Reconstruction\070 - Plans\IP-3\07 Structures\S-02

SAFETY ON THIS JOB DEPENDS ON YOU

NOTES:

1. THE CONTRACTOR SHALL PROVIDE 30 FT. ROUND TAPERED STEEL LIGHT POLE AT THE LOCATION SHOWN. FOR ANTENNA INFORMATION AND POLE DETAIL. REFER TO DWG NO T-06.
2. FOR STILLING WELL DETAILS REFER TO REFER TO MECHANICAL DRAWING.

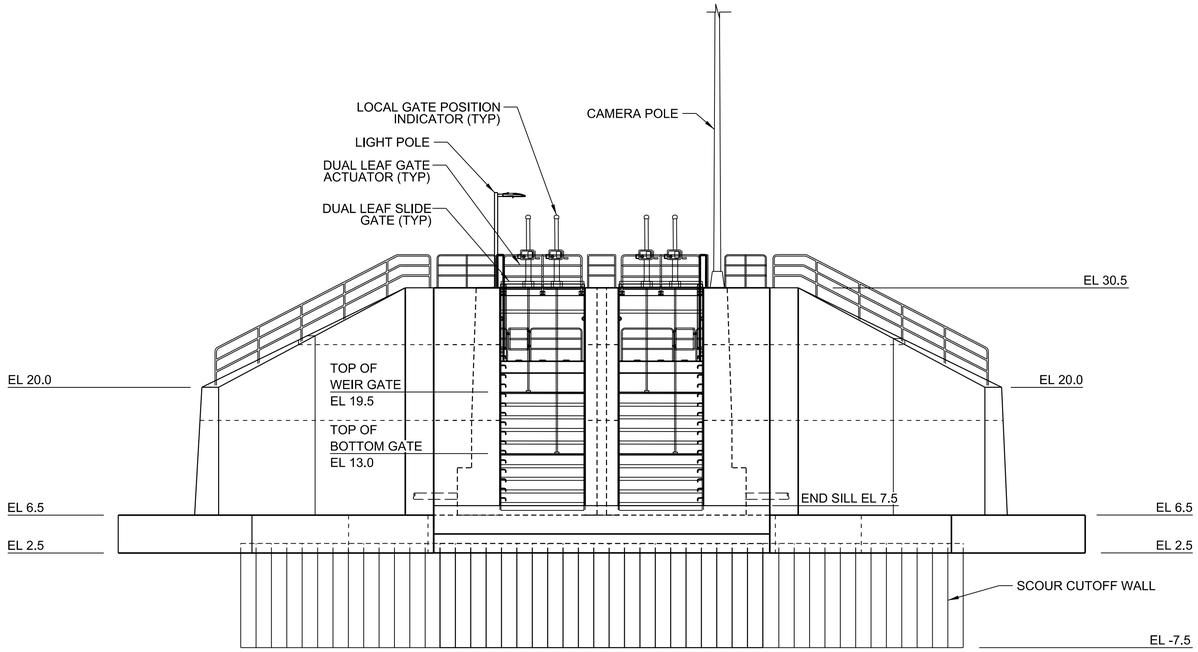

B S-02 **LANDSIDE ELEVATION**
SCALE: A

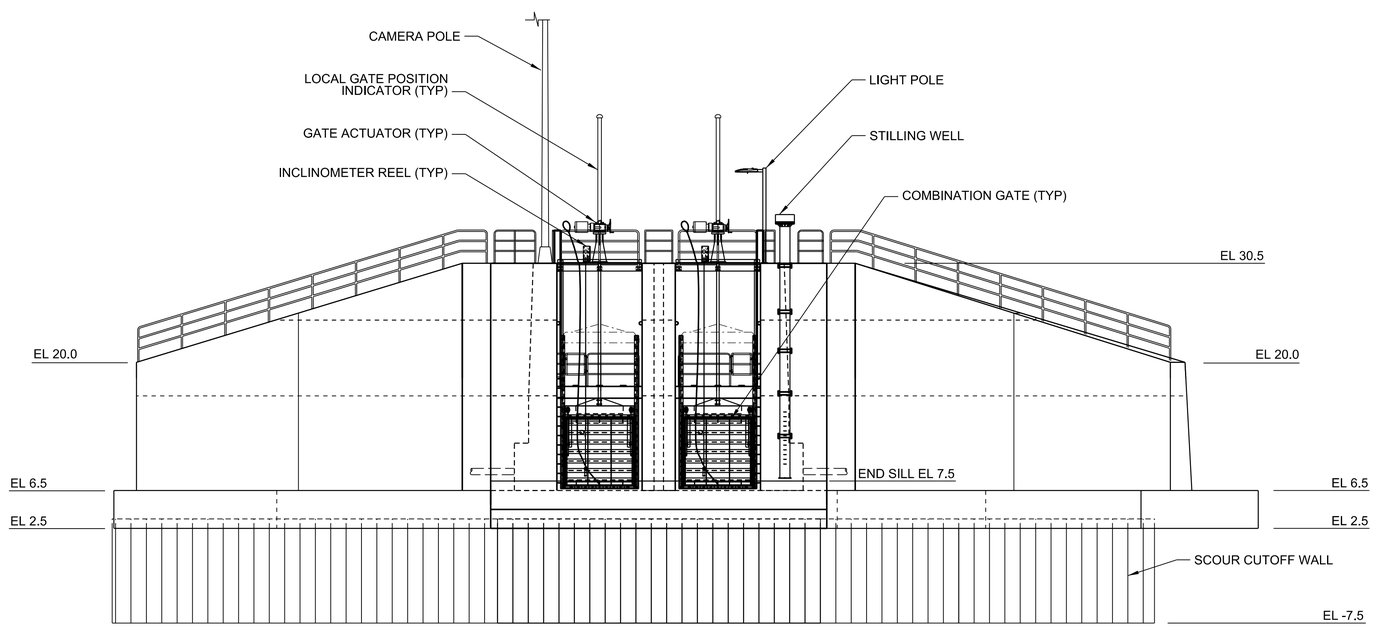

C S-02 **LAKESIDE ELEVATION**
SCALE: A

GRAPHIC SCALE

"A" 48" 24" 0 4' 8' 12' 16' 20'

US Army Corps of Engineers
Jacksonville District

No.	SYM	ZONE	DESCRIPTION
N	A	A-N	ABCD...

DEPARTMENT OF THE ARMY
CORPS OF ENGINEERS
JACKSONVILLE DISTRICT
JACKSONVILLE, FLORIDA

DESIGNED BY: C.B.G.		DATE: MARCH 2015
DWN BY: W.E.S.	CHD BY: J.S.F.	SOLICITATION NO.: W912EP-16-R-0010
SUBMITTED BY: N/A		CONTRACT NO.: N/A
PLOT SCALE: AS SHOWN	PLOT DATE: Apr 25, 2016	FILE NUMBER: N/A
FILE NAME: 114527-HHDRCRIP3-SS103.DGN		

HERBERT HOOVER DIKE REHABILITATION PROJECT
STRUCTURE REPLACEMENTS

S-291 (IP-3) RECONSTRUCTION

STRUCTURAL
HEADWALL ELEVATIONS

DRAWING NO.
S-03

pw:\\COE-SAJ\PWP02\JAX.saj.ds.usace.army.mil:SAJ\PW\Documents\C&SF\Herbert Hoover Dike Rehabilitation\03-Culvert Rehabilitation\S-292(IP-1), S-290(IP-2), S-291(IP-3) Culvert Reconstruction\070 - Plans\IP-3\07 Structures\S-03

SAFETY ON THIS JOB DEPENDS ON YOU

NOTES:

1. FOR WORK POINT DATA, SEE SHEET C-09.

KEY NOTES:

1. DUAL 9" PVC WATERSTOP, REFER TO DWG NO S-54.
2. OPTIONAL CONSTRUCTION JOINT FOR GATE THIMBLE BLOCK OUT PER MANUFACTURER RECOMMENDATIONS AND APPROVED SUBMITTAL. PROVIDE VENT AND GROUT PORTS IN BASE OF THIMBLE. USE NON SHRINK GROUT.

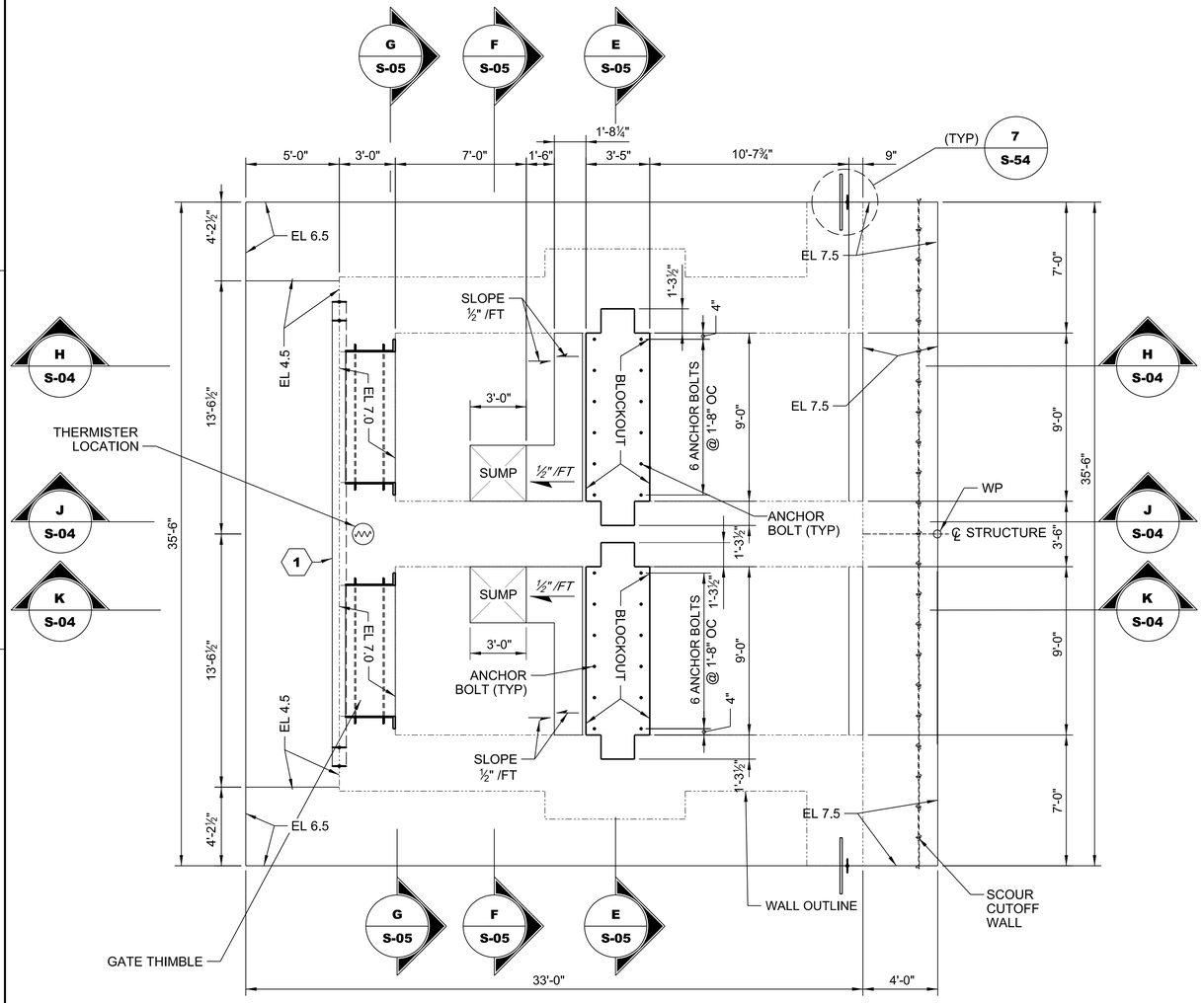

PLAN - EL 7.5
SCALE: A

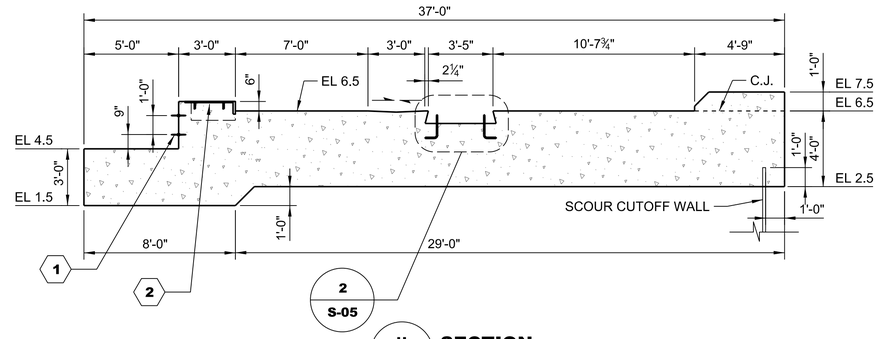

H S-04 SECTION
SCALE: A

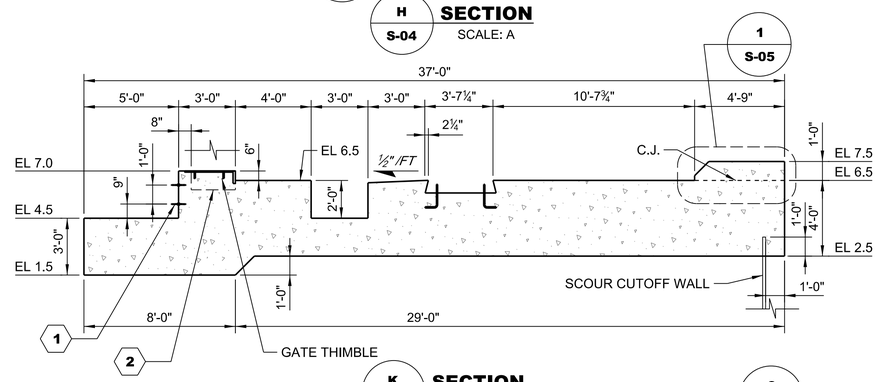

K S-04 SECTION
SCALE: A

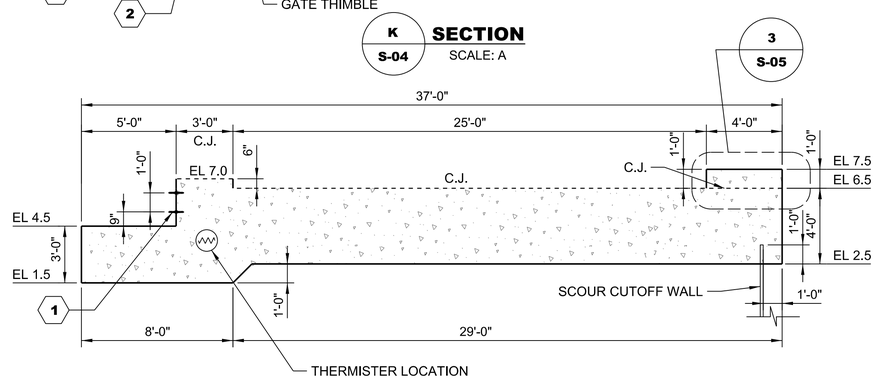

J S-04 SECTION
SCALE: A

GRAPHIC SCALE

"A" 24" 12" 0 2' 4' 6' 8' 10'

US Army Corps of Engineers
Jacksonville District

No.	SYM	DESCRIPTION
N	A-N	ABCD...
	ZONE	

DEPARTMENT OF THE ARMY
CORPS OF ENGINEERS
JACKSONVILLE DISTRICT
JACKSONVILLE, FLORIDA

DESIGNED BY: C.B.G. | DATE: MARCH 2015
DWN BY: W.E.S. | CKD BY: J.S.F. | SOLICITATION NO.: W912EP-16-R-0010
SUBMITTED BY: N/A | CONTRACT NO.: N/A
PLOT SCALE: N/A | PLOT DATE: Apr 25, 2016 | FILE NUMBER: N/A
FILE NAME: 114527-HHDRCRIP3-SB104.DGN

HERBERT HOOVER DIKE REHABILITATION PROJECT
STRUCTURE REPLACEMENTS

S-291 (IP-3) RECONSTRUCTION
STRUCTURAL
LAKESIDE HEADWALL
FOUNDATION PLAN AND SECTIONS

DRAWING NO.
S-04

pw:\\COE-SAJPW\P02JAX.saj.ds.usace.army.mil:SAJPW\Documents\C&SF\Herbert Hoover Dike Rehabilitation\03-Culvert Reconstruction\070 - Plans\IP-3\07 Structures\S-04

SAFETY ON THIS JOB DEPENDS ON YOU

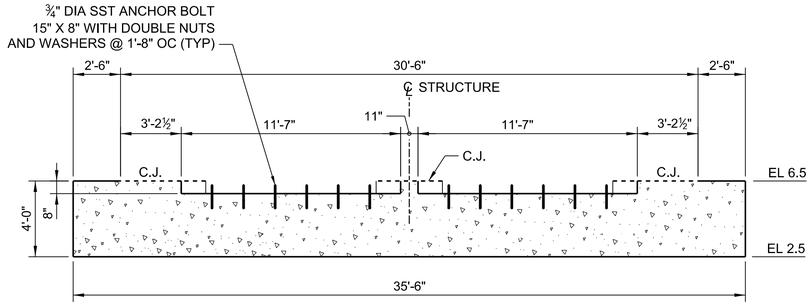

E / S-04 SECTION
SCALE: A

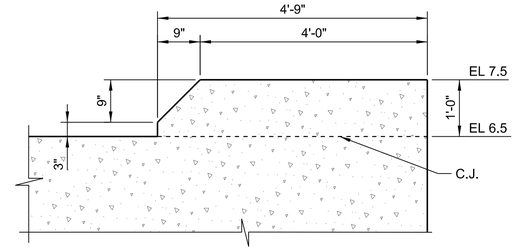

1 / S-04 DETAIL
SCALE: N.T.S.

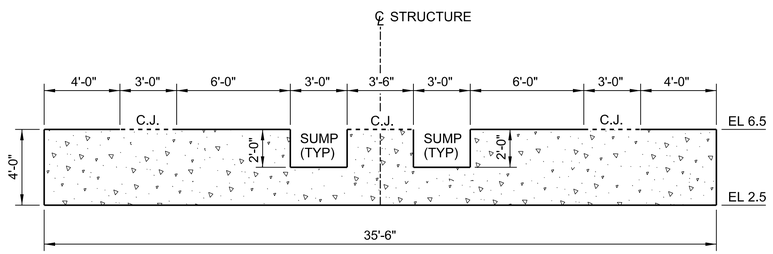

F / S-04 SECTION
SCALE: A

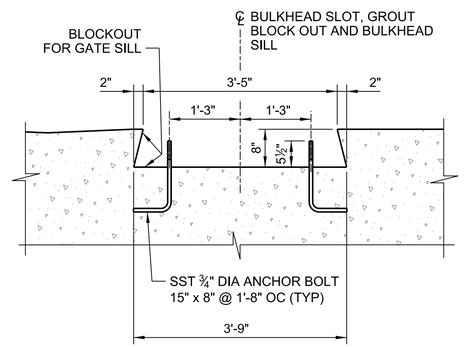

2 / S-04 DETAIL
SCALE: N.T.S.

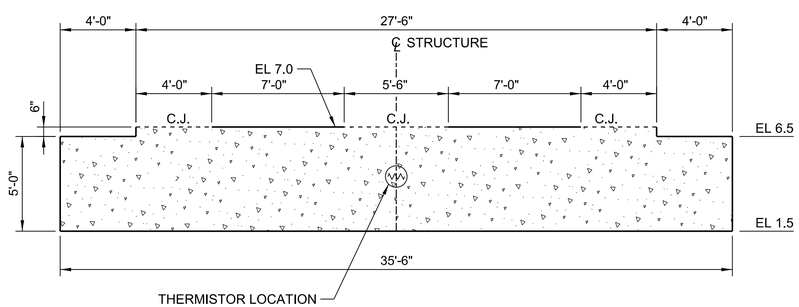

G / S-04 SECTION
SCALE: A

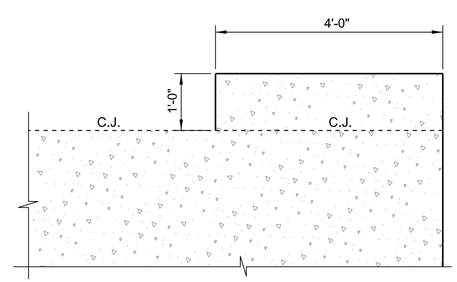

3 / S-04 DETAIL
SCALE: N.T.S.

GRAPHIC SCALE

"A" 24" 12" 0 2' 4' 6' 8' 10'

US Army Corps of Engineers
Jacksonville District

No.	SYM	ZONE	DESCRIPTION
N	A	A-N	ABCD...

DEPARTMENT OF THE ARMY
CORPS OF ENGINEERS
JACKSONVILLE DISTRICT
JACKSONVILLE, FLORIDA

DESIGNED BY: C.B.G.
DATE: MARCH 2015
DWN BY: W.E.S.
CKD BY: J.S.F.
SOLICITATION NO.: W912EP-16-R-0010
SUBMITTED BY: N/A
CONTRACT NO.: N/A
PLOT SCALE: AS SHOWN
PLOT DATE: Apr 25, 2016
FILE NUMBER: N/A
FILE NAME: 114527-HHDRCRIP3-SB105.DGN

HERBERT HOOVER DIKE REHABILITATION PROJECT
STRUCTURE REPLACEMENTS

S-291 (IP-3) RECONSTRUCTION

STRUCTURAL

LAKESIDE HEADWALL FOUNDATION SECTIONS AND DETAILS

DRAWING NO.
S-05

pw:\\COE-SAJPW\P02JAX.saj.ds.usace.army.mil:SAJPW\Documents\C&SF\Herbert Hoover Dike Rehabilitation\03-Culvert Rehabilitation\S-292(IP-1), S-290(IP-2), S-291(IP-3) Culvert Reconstruction\070 - Plans\IP-3\07 Structures\S-05

SAFETY ON THIS JOB DEPENDS ON YOU

KEY NOTES:

1. DUAL 9" PVC WATERSTOP, REFER TO DWG NO. S-54.

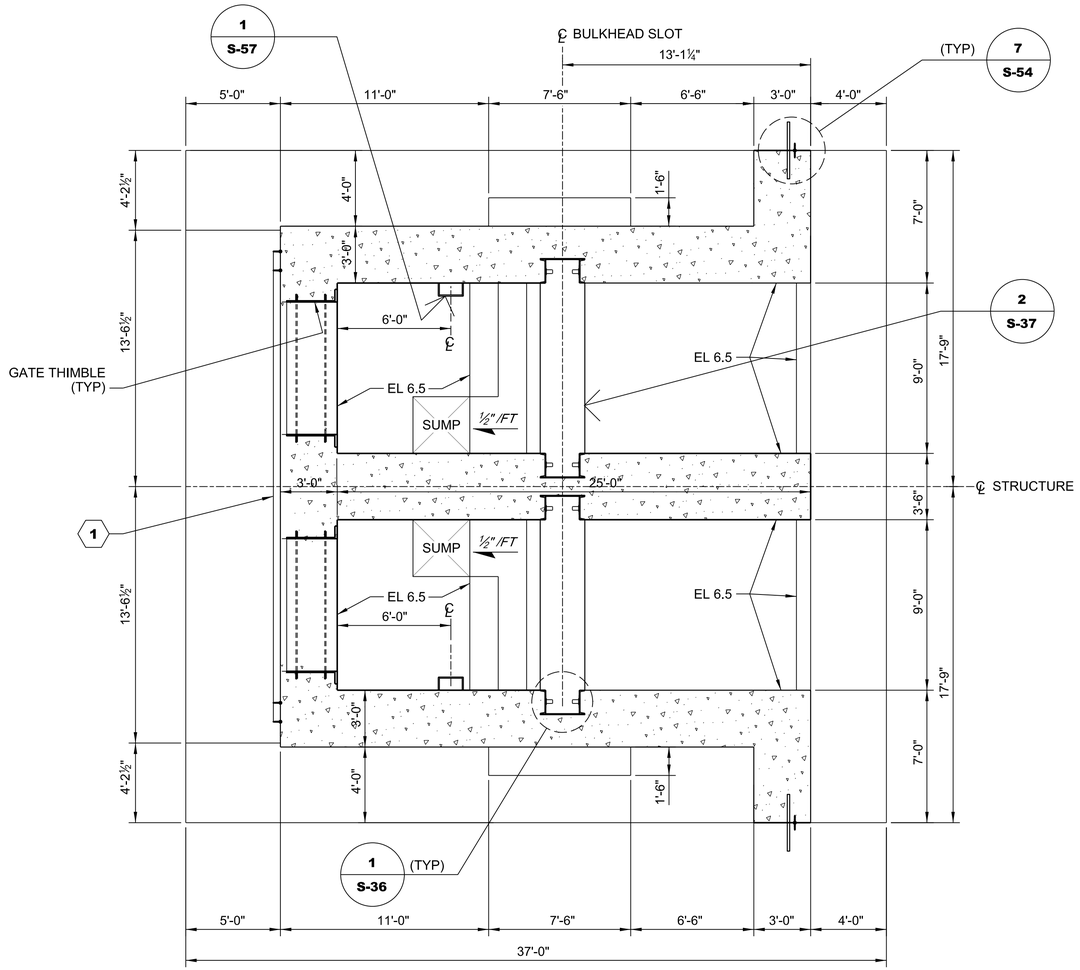

PLAN - EL 8.0
SCALE: A

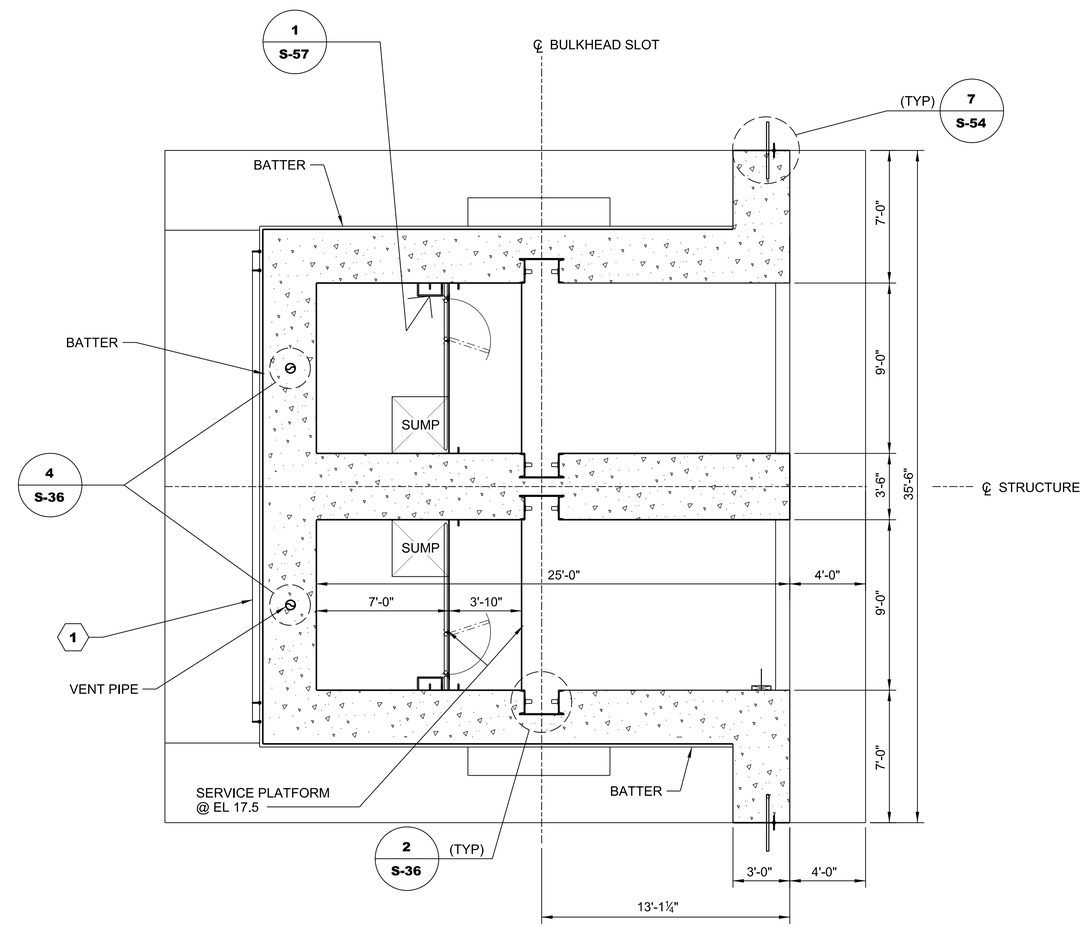

PLAN - EL 17.5
SCALE: A

GRAPHIC SCALE

"A" 24" 12" 0 2' 4' 6' 8' 10'

US Army Corps of Engineers
Jacksonville District

No.	SYM	ZONE	DESCRIPTION
N	A	A-N	ABCD...

DEPARTMENT OF THE ARMY
CORPS OF ENGINEERS
JACKSONVILLE DISTRICT
JACKSONVILLE, FLORIDA

DESIGNED BY: C.B.G.
DWN BY: W.E.S.
CKD BY: J.S.F.
SUBMITTED BY: N/A
DATE: MARCH 2015
SOLICITATION NO.: W912EP-16-R-0010
CONTRACT NO.: N/A
PLOT SCALE: AS SHOWN
PLOT DATE: Apr 25, 2016
FILE NUMBER: N/A
FILE NAME: 114527-HHDRCRIP3-SB106.DGN

HERBERT HOOVER DIKE REHABILITATION PROJECT
STRUCTURE REPLACEMENTS

S-291 (IP-3) RECONSTRUCTION

STRUCTURAL

LAKESIDE HEADWALL
PLAN EL 8.0 AND EL 17.5

DRAWING NO.
S-06

pw:\\COE-SAJPW02JAX.saj.ds.usace.army.mil:SAJPW\Documents\C&SF\Herbert Hoover Dike Rehabilitation\03-Culvert Rehabilitation\S-292(IP-1), S-290(IP-2), S-291(IP-3) Culvert Reconstruction\070 - Plans\IP-3\07 Structures\S-06

SAFETY ON THIS JOB DEPENDS ON YOU

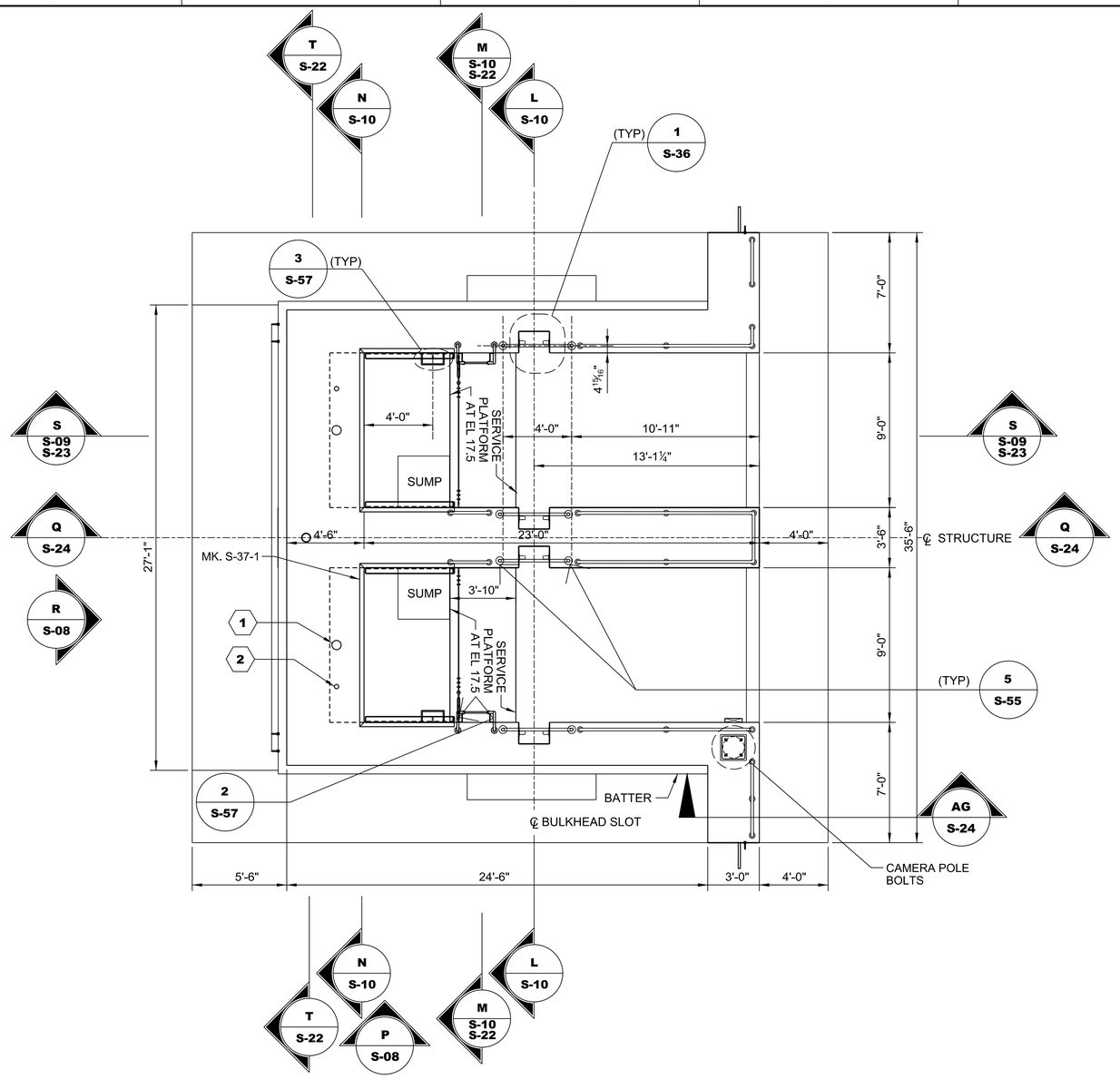

PLAN - EL 30.5

SCALE: A

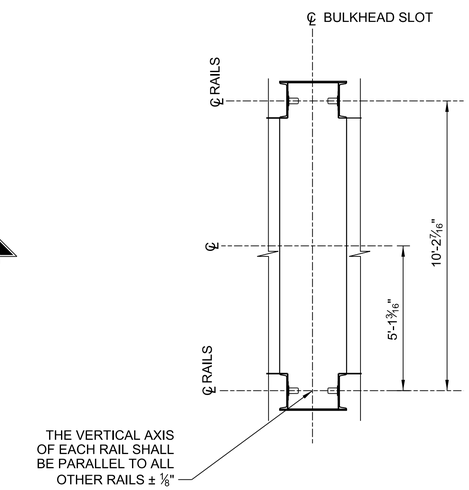

PLAN - TYPICAL BULKHEAD SLOT

SCALE: B

KEY NOTES:

1. OPENING FOR GATE STEM, CONTRACTOR SHALL COORDINATE OPENING SIZE AND LOCATION WITH GATE MANUFACTURER AND GATE ACTUATOR VENDOR.
2. 1½" DIA OPENING FOR INCLOMETER SENSOR ELECTRICAL CABLE, CONTRACTOR SHALL COORDINATE LOCATION WITH GATE MANUFACTURER, FOR INSTALLATION REQUIREMENTS REFER TO DWG NO. T-08 AND T-09.

GRAPHIC SCALES

"A" 24" 12" 0 2' 4' 6' 8' 10'

"B" 24" 12" 0 2' 4' 6'

US Army Corps of Engineers, Jacksonville District

No.	SYM	ZONE	DESCRIPTION
N	A	A-N	ABCD...

DESIGNED BY: C.B.G. | DATE: MARCH 2015
DWN BY: W.E.S. | CKD BY: J.S.F. | SOLICITATION NO.: W912EP-16-R-0010
SUBMITTED BY: N/A | CONTRACT NO.: N/A
PLOT SCALE: AS SHOWN | PLOT DATE: Apr 25, 2016 | FILE NUMBER: N/A
FILE NAME: 114527-HHDRCRIP3-SB107.DGN

DEPARTMENT OF THE ARMY
CORPS OF ENGINEERS
JACKSONVILLE DISTRICT
JACKSONVILLE, FLORIDA

HERBERT HOOVER DIKE REHABILITATION PROJECT
STRUCTURE REPLACEMENTS

S-291 (IP-3) RECONSTRUCTION

STRUCTURAL

LAKESIDE HEADWALL PLAN EL 30.5

DRAWING NO.

S-07

pw:\\COE-SAJPW\P02JAX.saj.ds.usace.army.mil:SAJPW\Documents\C&SF\Herbert Hoover Dike Rehabilitation\03-Culvert Rehabilitation\S-292(IP-1), S-290(IP-2), S-291(IP-3) Culvert Reconstruction\070 - Plans\IP-3\07 Structures\S-07

SAFETY ON THIS JOB DEPENDS ON YOU

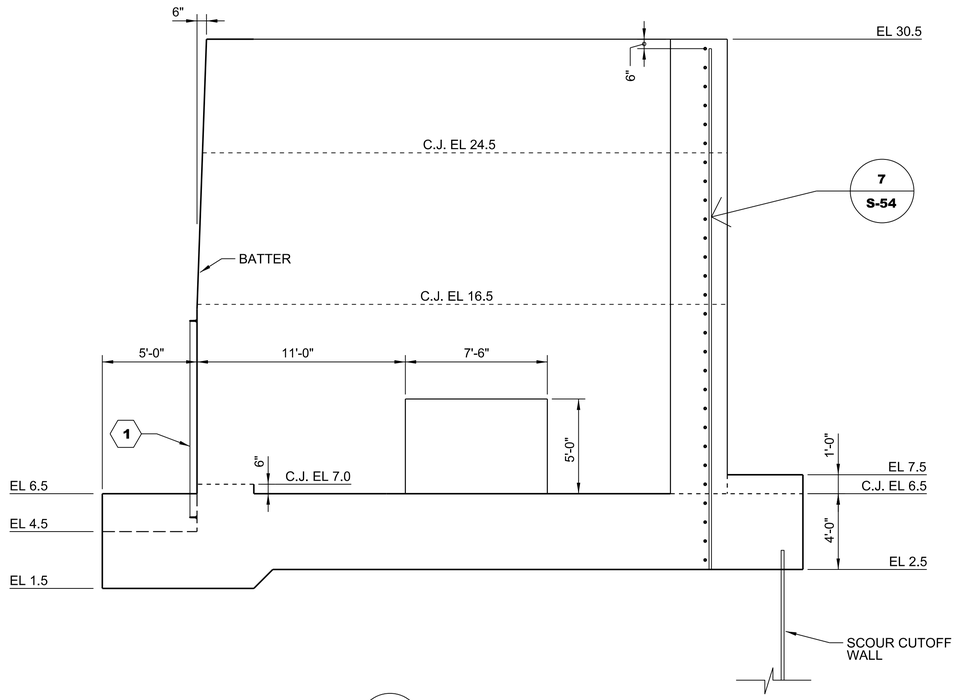

P S-07 **ELEVATION**
SCALE: A

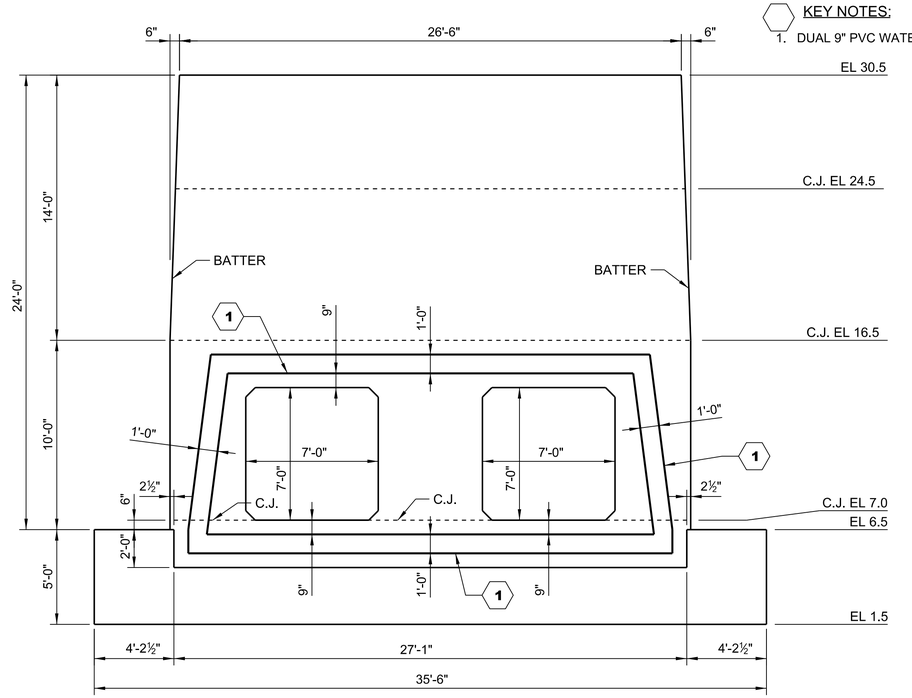

R S-07 **ELEVATION**
SCALE: A

KEY NOTES:

1. DUAL 9" PVC WATERSTOP, REFER TO DWG NO. S-54.

GRAPHIC SCALE

"A" 24" 12" 0 2' 4' 6' 8' 10'

US Army Corps of Engineers
Jacksonville District

No.	STM	ZONE	DESCRIPTION
N	A	A-N	ABCD...

DEPARTMENT OF THE ARMY
CORPS OF ENGINEERS
JACKSONVILLE DISTRICT
JACKSONVILLE, FLORIDA

DESIGNED BY: C.B.G.	DATE: MAY 2014
DWN BY: W.E.S.	CKD BY: J.S.F.
SOLICITATION NO.: W912EP-16-R-0010	
SUBMITTED BY: N/A	CONTRACT NO.: N/A
PLOT SCALE: AS SHOWN	PLOT DATE: Apr 25, 2016
FILE NUMBER: N/A	
FILE NAME: 114527-HHDRCRIP3-SB308.DGN	

HERBERT HOOVER DIKE REHABILITATION PROJECT
STRUCTURE REPLACEMENTS

S-291 (IP-3) RECONSTRUCTION

STRUCTURAL
LAKESIDE HEADWALL SECTIONS

DRAWING NO.
S-08

pw:\\COE-SAJPW02JAX.saj.ds.usace.army.mil:SAJPW\Documents\C&SF\Herbert Hoover Dike Rehabilitation\03-Culvert Rehabilitation\S-292(IP-1), S-290(IP-2), S-291(IP-3) Culvert Reconstruction\070 - Plans\IP-3\07 Structures\S-08

SAFETY ON THIS JOB DEPENDS ON YOU

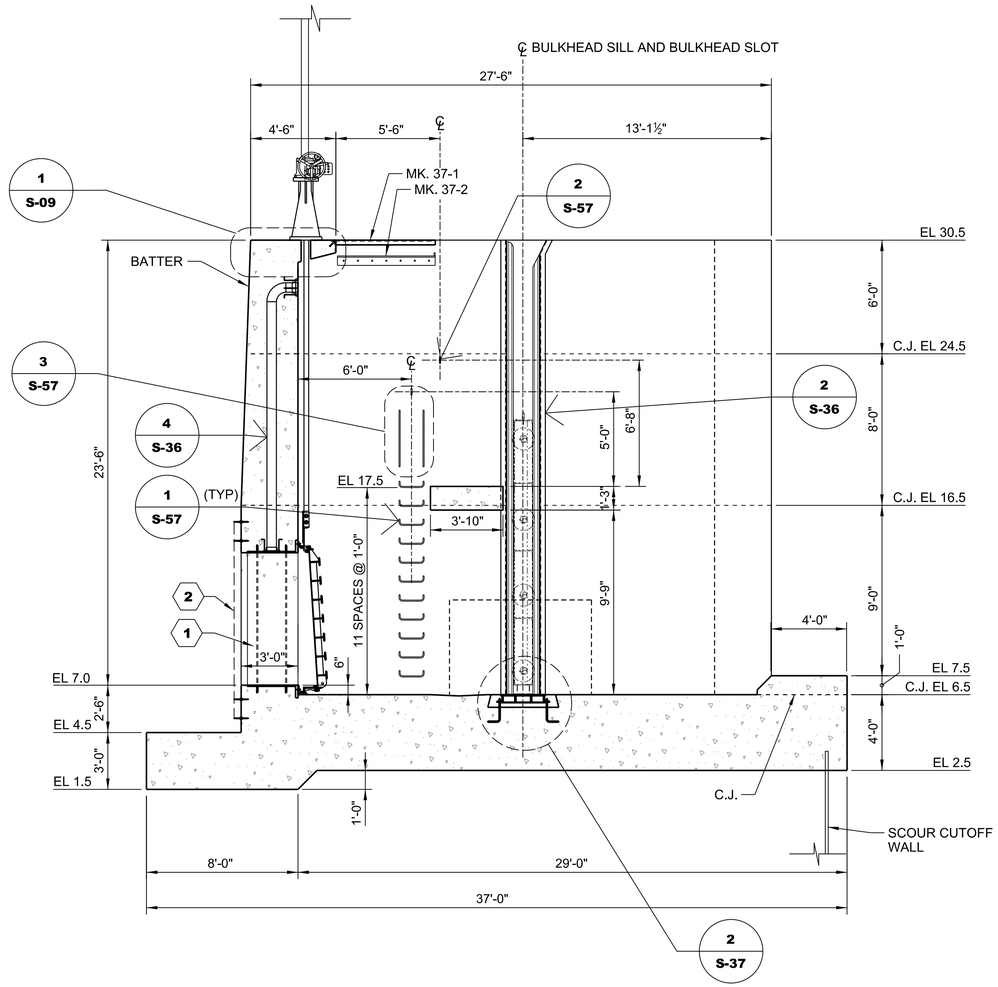

S / S-07 **SECTION**
SCALE: A

KEY NOTES:

1. EMBEDDED GATE THIMBLE, SEE DWG NO. S-47.
2. DUAL 9" PVC WATERSTOP.

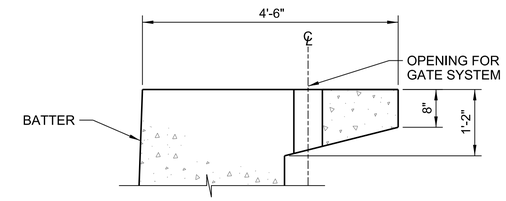

1 / S-09 **DETAIL**
SCALE: B

GRAPHIC SCALES

"A" 24" 12" 0 2' 4' 6' 8' 10'

"B" 12" 6" 0 1' 2' 3'

US Army Corps of Engineers
Jacksonville District

No.	SYM	ZONE	DESCRIPTION
N	A	A-N	ABCD...

DEPARTMENT OF THE ARMY
CORPS OF ENGINEERS
JACKSONVILLE DISTRICT
JACKSONVILLE, FLORIDA

DESIGNED BY: C.B.G.
DATE: MARCH 2015
DWN BY: W.E.S.
CKD BY: J.S.F.
SOLICITATION NO.: W912EP-16-R-0010
SUBMITTED BY: N/A
CONTRACT NO.: N/A
PLOT SCALE: AS SHOWN
PLOT DATE: Apr 25, 2014
FILE NUMBER: N/A
FILE NAME: 114527-HHDRCRIP3-SB309.DGN

HERBERT HOOVER DIKE REHABILITATION PROJECT
STRUCTURE REPLACEMENTS

S-291 (IP-3) RECONSTRUCTION

STRUCTURAL

LAKESIDE HEADWALL SECTIONS

DRAWING NO.
S-09

pw:\\COE-SAJPW\P02\JAX.saj.ds.usace.army.mil:SAJ\PW\Documents\C&SF\Herbert Hoover Dike Rehabilitation\03-Culvert Reconstruction\070 - Plans\IP-3\07 Structures\S-09

S-291(IP-1), S-290(IP-2), S-291(IP-3) Culvert Reconstruction

SAFETY ON THIS JOB DEPENDS ON YOU

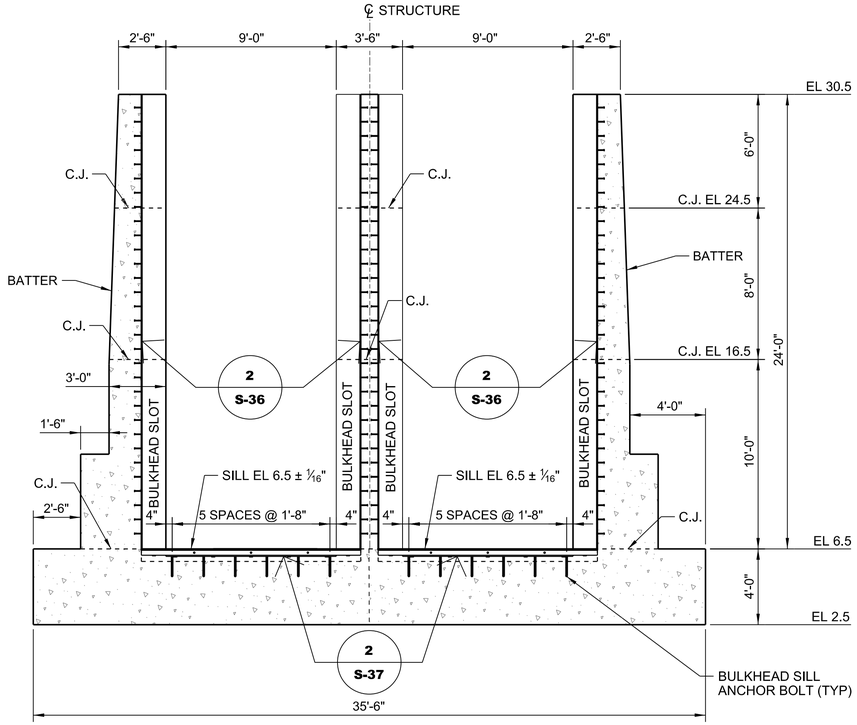

L S-07 **SECTION**
SCALE: A

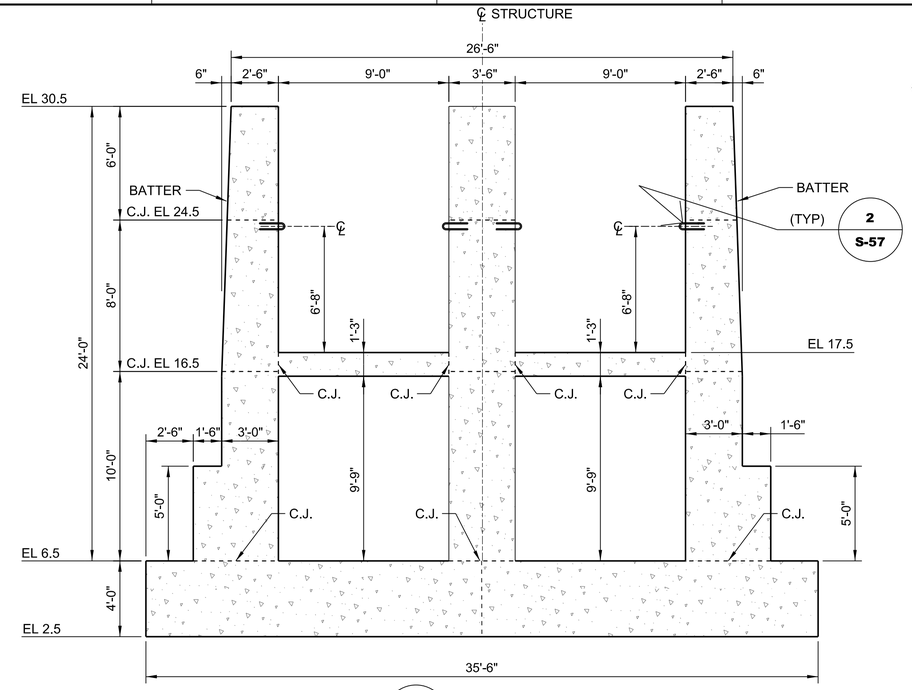

M S-07 **SECTION**
SCALE: A

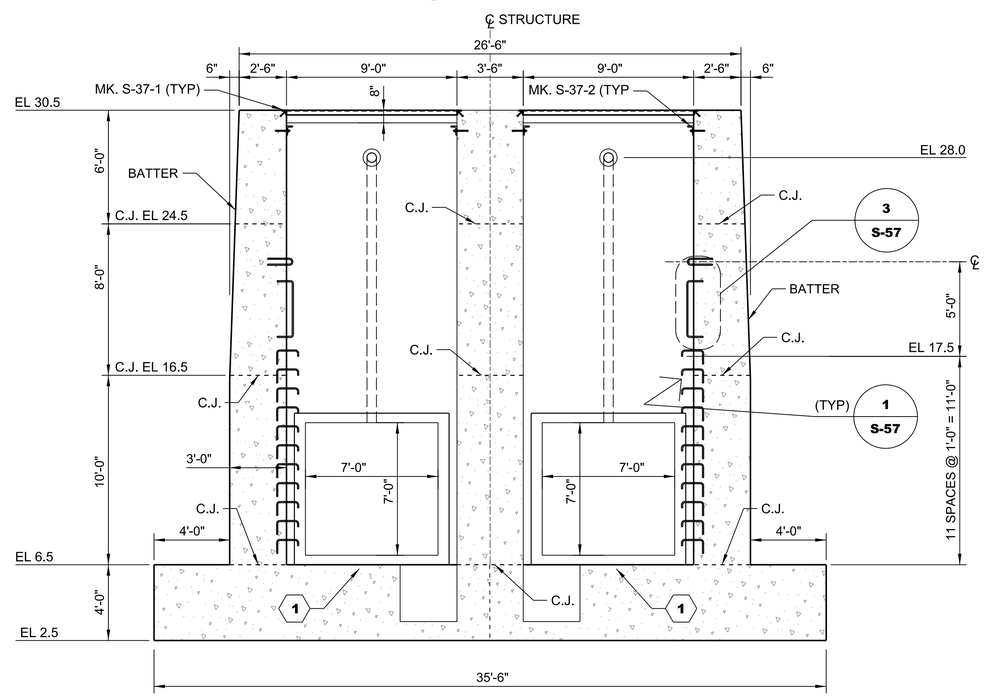

N S-07 **SECTION**
SCALE: A

KEY NOTES:

1. EMBEDDED GATE THIMBLE, SEE DWG NO S-47.

GRAPHIC SCALE
"A" 24" 12" 0 2' 4' 6' 8' 10'

US Army Corps of Engineers
Jacksonville District

No.	STM	ZONE	DESCRIPTION
N	A-N	ABCD...	

DEPARTMENT OF THE ARMY
CORPS OF ENGINEERS
JACKSONVILLE DISTRICT
JACKSONVILLE, FLORIDA

DESIGNED BY: C.B.G.
DWN BY: W.E.S.
CKD BY: J.S.F.
SUBMITTED BY: N/A
DATE: MARCH 2015
SOLICITATION NO.: W912EP-16-R-0010
CONTRACT NO.: N/A
PLOT SCALE: AS SHOWN
PLOT DATE: Apr 25, 2016
FILE NUMBER: N/A
FILE NAME: 114527-HHDRCRIP3-SB310.DGN

HERBERT HOOVER DIKE REHABILITATION PROJECT
STRUCTURE REPLACEMENTS

S-291 (IP-3) RECONSTRUCTION

STRUCTURAL

LAKESIDE HEADWALL SECTIONS

DRAWING NO.
S-10

pw:\\COE-SAJPWP02JAX.saj.ds.usace.army.mil:SAJPW\Documents\C&SF\Herbert Hoover Dike Rehabilitation\03-Culvert Rehabilitation\S-292(IP-1), S-290(IP-2), S-291(IP-3) Culvert Reconstruction\070 - Plans\IP-3\07 Structures\S-10

SAFETY ON THIS JOB DEPENDS ON YOU

KEY NOTES:

1. DUAL 9" PVC WATERSTOP, REFER TO DWG NO. S-54.

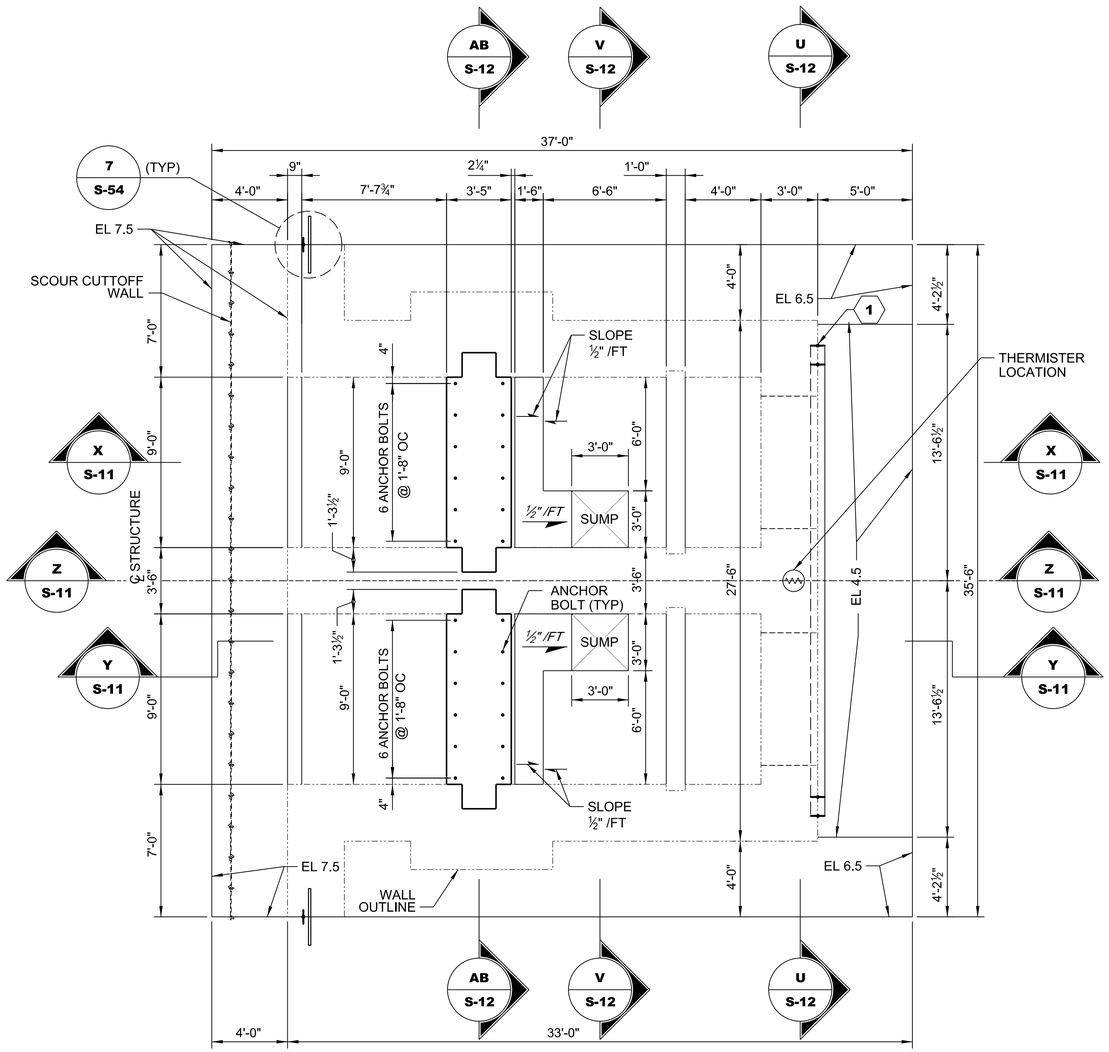

PLAN - EL 7.5
SCALE: A

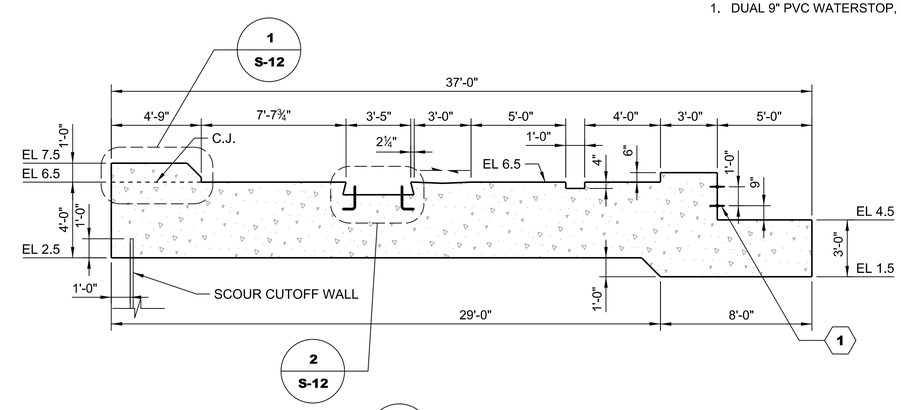

X S-11 **SECTION**
SCALE: A

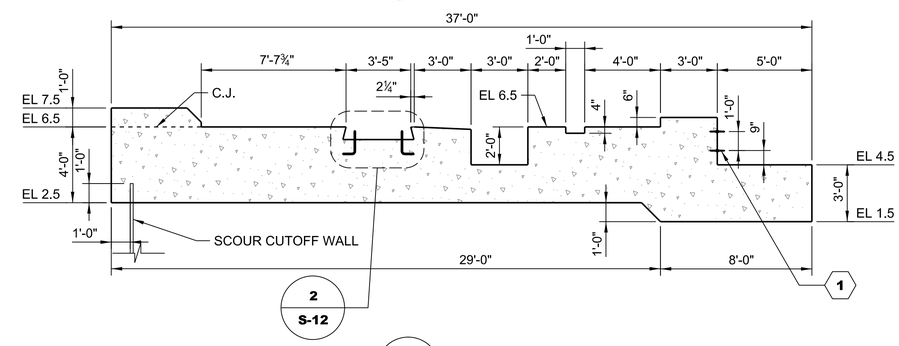

Y S-11 **SECTION**
SCALE: A

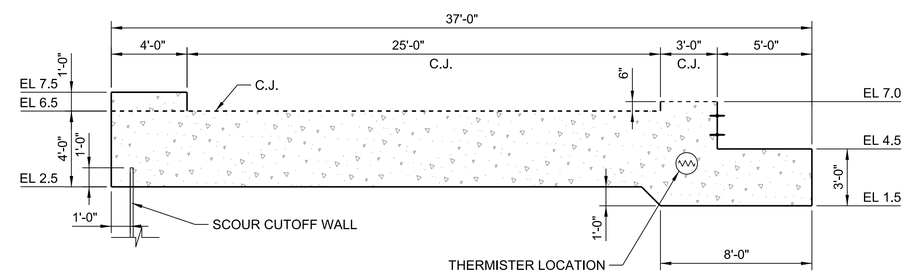

Z S-11 **SECTION**
SCALE: A

GRAPHIC SCALES

"A" 24" 12" 0 2' 4' 6' 8' 10'

"B" 12" 6" 0 1' 2' 3'

US Army Corps of Engineers
Jacksonville District

No.	STM	ZONE	DESCRIPTION
N	A-N	ABCD...	

DEPARTMENT OF THE ARMY
CORPS OF ENGINEERS
JACKSONVILLE DISTRICT
JACKSONVILLE, FLORIDA

DESIGNED BY: C.B.G.
DATE: MARCH 2015
DWN BY: W.E.S.
CKD BY: J.S.F.
SOLICITATION NO.: W912EP-16-R-0010
SUBMITTED BY: N/A
CONTRACT NO.: N/A
PLOT SCALE: AS SHOWN
PLOT DATE: Apr 25, 2016
FILE NUMBER: N/A
FILE NAME: 114527-HHDRCRIP3-SB111.DGN

HERBERT HOOVER DIKE REHABILITATION PROJECT
STRUCTURE REPLACEMENTS

S-291 (IP-3) RECONSTRUCTION

STRUCTURAL
LANDSIDE HEADWALL FOUNDATION PLAN AND SECTIONS

DRAWING NO.
S-11

pw:\\COE-SAJ\PWP02\JAX.saj.ds.usace.army.mil:SAJ\PW\Documents\C&S\FHerbert Hoover Dike Rehabilitation\03-Culvert Reconstruction\070 - Plans\IP-3\07 Structures\S-11

S-292(IP-1), S-290(IP-2), S-291(IP-3) Culvert Reconstruction

SAFETY ON THIS JOB DEPENDS ON YOU

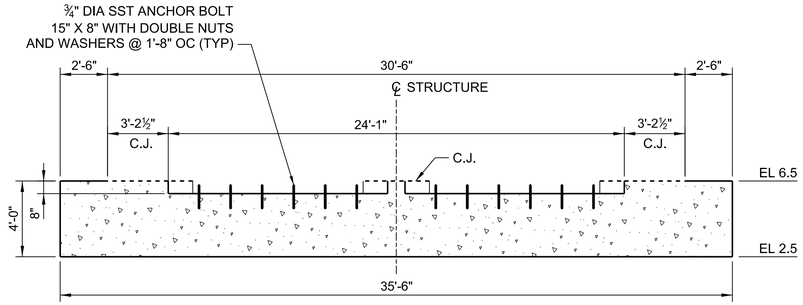

AB / S-11 SECTION
SCALE: A

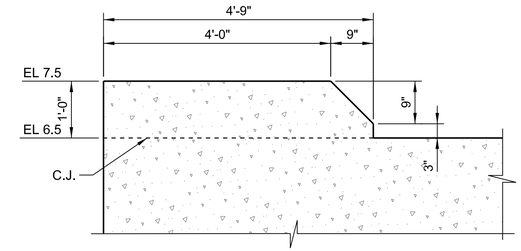

1 / S-11 DETAIL
SCALE: N.T.S.

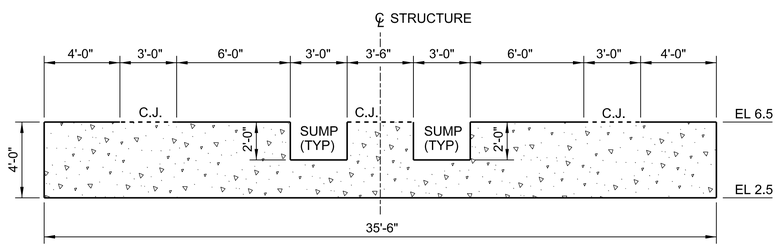

V / S-11 SECTION
SCALE: A

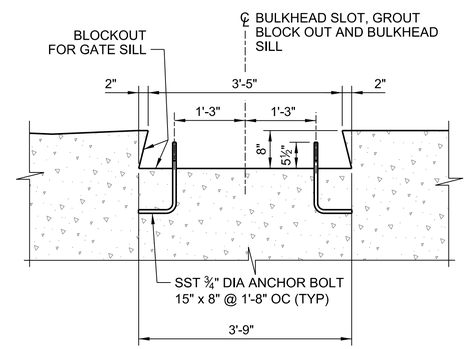

2 / S-11 DETAIL
SCALE: N.T.S.

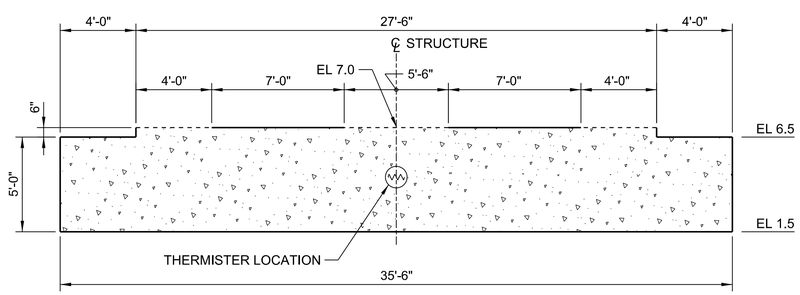

U / S-11 SECTION
SCALE: A

GRAPHIC SCALE
"A" 24" 12" 0 2' 4' 6' 8' 10'

US Army Corps of Engineers
Jacksonville District

No.	SYM	ZONE	DESCRIPTION
N	A	A-N	ABCD...

DEPARTMENT OF THE ARMY
CORPS OF ENGINEERS
JACKSONVILLE DISTRICT
JACKSONVILLE, FLORIDA

DESIGNED BY: C.B.G.
DATE: MARCH 2015
DWN BY: W.E.S.
CKD BY: J.S.F.
SOLICITATION NO.: W912EP-16-R-0010
SUBMITTED BY: N/A
CONTRACT NO.: N/A
PLOT SCALE: AS SHOWN
PLOT DATE: Apr 25, 2016
FILE NUMBER: N/A
FILE NAME: 114527-HHDRCRIP3-SB112.DGN

HERBERT HOOVER DIKE REHABILITATION PROJECT
STRUCTURE REPLACEMENTS

S-291 (IP-3) RECONSTRUCTION

STRUCTURAL

LANDSIDE HEADWALL FOUNDATION SECTIONS AND DETAILS

DRAWING NO.
S-12

pw:\\COE-SAJ\PWP02\JAX.saj.ds.usace.army.mil:SAJ\PW\Documents\C&S\FHerbert Hoover Dike Rehabilitation\03-Culvert Reconstruction\07 - Plans\IP-3\07 Structures\S-12

S-291(IP-1), S-290(IP-2), S-291(IP-3) Culvert Reconstruction

SAFETY ON THIS JOB DEPENDS ON YOU

KEY NOTES:

1. DUAL 9" PVC WATERSTOP, REFER TO DWG NO. S-54.
2. FILTER DRAIN OUTLET, SEE DWG NO. C-10.
3. BLOCKOUT FOR DUAL LEAF SLIDE GATE, CONTRACTOR SHALL COORDINATE OPENING SIZE AND LOCATION WITH GATE MANUFACTURER AND GATE ACTUATOR VENDOR.

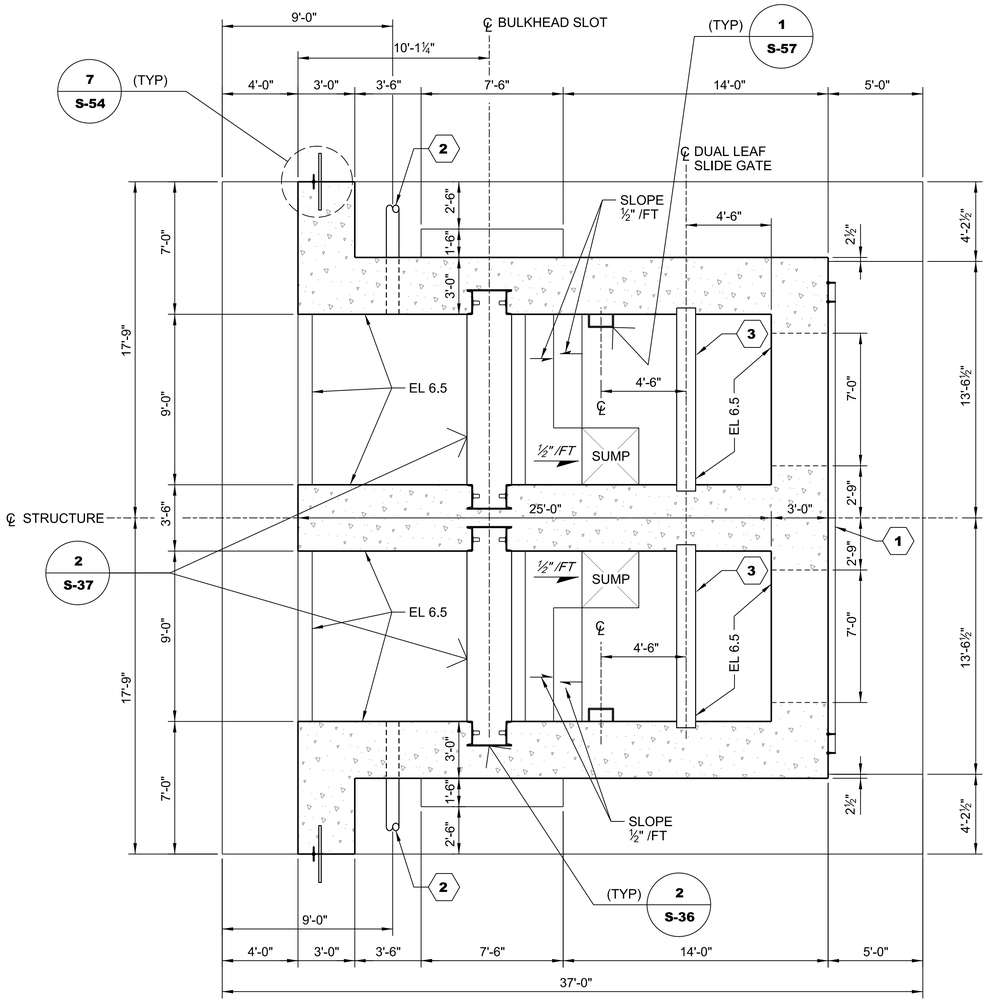

PLAN - EL 8.0
SCALE: A

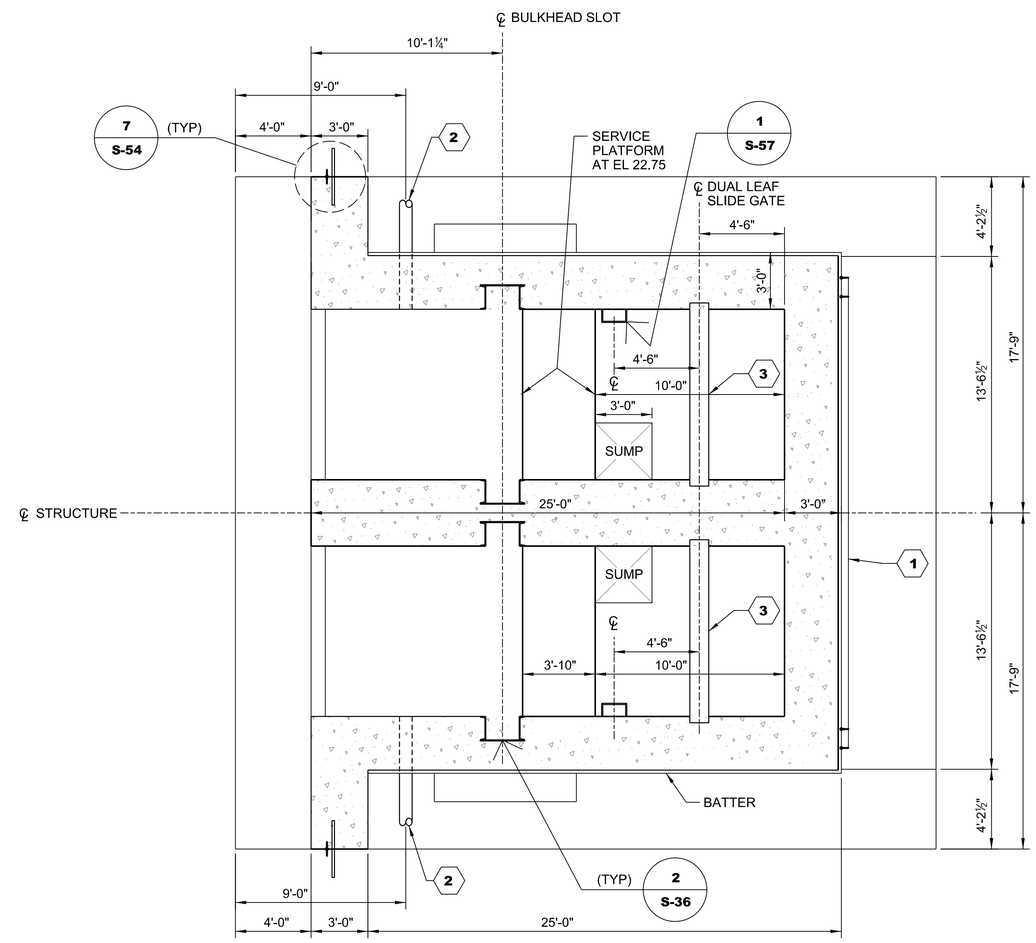

PLAN - EL 22.75
SCALE: A

GRAPHIC SCALE
"A" 24" 12" 0 2' 4' 6' 8' 10'

US Army Corps of Engineers
Jacksonville District

No.	STM	ZONE	DESCRIPTION
N	A-N	ABCD...	

DEPARTMENT OF THE ARMY
CORPS OF ENGINEERS
JACKSONVILLE DISTRICT
JACKSONVILLE, FLORIDA

DESIGNED BY: C.B.G.
DWN BY: W.E.S.
CKD BY: J.S.F.
SUBMITTED BY: N/A
PLOT SCALE: AS SHOWN
PLOT DATE: Apr 25, 2014
DATE: MARCH 2015
SOLICITATION NO.: W912EP-16-R-0010
CONTRACT NO.: N/A
FILE NUMBER: N/A
FILE NAME: 114527-HHDRCRIP3-SB113.DGN

HERBERT HOOVER DIKE REHABILITATION PROJECT
STRUCTURE REPLACEMENTS

S-291 (IP-3) RECONSTRUCTION

STRUCTURAL
LANDSIDE HEADWALL
PLAN EL 8.0 AND EL 22.75

DRAWING NO.
S-13

pw:\\COE-SAJPWP02JAX.saj.ds.usace.army.mil:SAJPW\Documents\C&SF\Herbert Hoover Dike Rehabilitation\03-Culvert Rehabilitation\S-292(IP-1), S-290(IP-2), S-291(IP-3) Culvert Reconstruction\070 - Plans\IP-3\07 Structures\S-13

SAFETY ON THIS JOB DEPENDS ON YOU

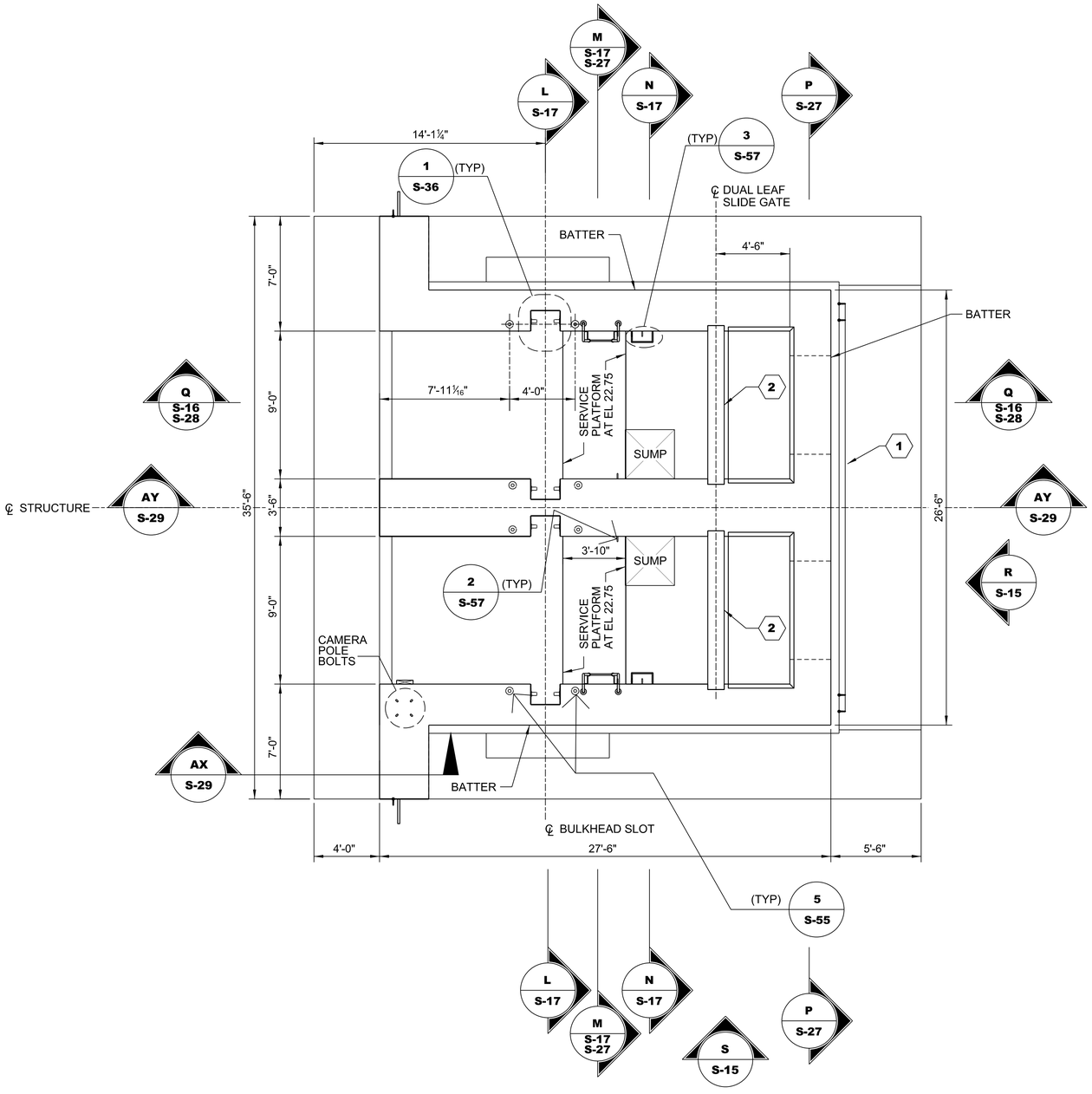

PLAN - EL 30.5

SCALE: A

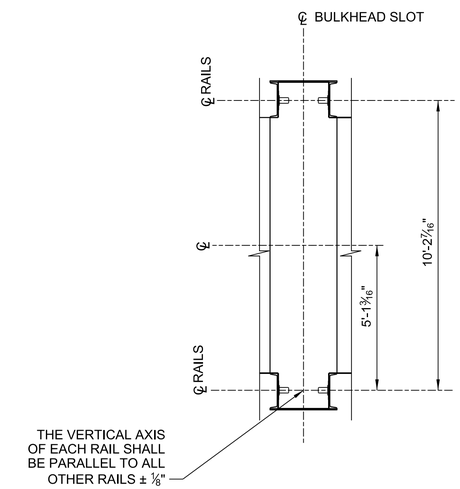

PLAN - TYPICAL BULKHEAD SLOT

SCALE: B

KEY NOTES:

1. DUAL 9" PVC WATERSTOP, REFER TO DWG NO. S-54.
2. BLOCKOUT FOR DUAL LEAF SLIDE GATE, CONTRACTOR SHALL COORDINATE OPENING SIZE AND LOCATION WITH GATE MANUFACTURER AND GATE ACTUATOR VENDOR.

GRAPHIC SCALES

"A" 24" 12" 0 2' 4' 6' 8' 10'

"B" 24" 12" 0 2' 4' 6'

US Army Corps of Engineers
Jacksonville District

No.	SYM	ZONE	DESCRIPTION
N	A	A-N	ABCD...

DEPARTMENT OF THE ARMY
CORPS OF ENGINEERS
JACKSONVILLE DISTRICT
JACKSONVILLE, FLORIDA

DESIGNED BY: C.B.G. | DATE: MARCH 2015
DWN BY: W.E.S. | CKD BY: J.S.F. | SOLICITATION NO.: W912EP-16-R-0010
SUBMITTED BY: N/A | CONTRACT NO.: N/A
PLOT SCALE: AS SHOWN | PLOT DATE: Apr 25, 2016 | FILE NUMBER: N/A
FILE NAME: 114527-HHDRCRIP3-SB114.DGN

HERBERT HOOVER DIKE REHABILITATION PROJECT
STRUCTURE REPLACEMENTS

S-291 (IP-3) RECONSTRUCTION

STRUCTURAL

LANDSIDE HEADWALL
PLAN EL 30.5

DRAWING NO.

S-14

pw:\\COE-SAJPW\P02JAX.saj.ds.usace.army.mil:SAJPW\Documents\C&SF\Herbert Hoover Dike Rehabilitation\03-Culvert Reconstruction\070 - Plans\IP-3\07 Structures\S-14

SAFETY ON THIS JOB DEPENDS ON YOU

KEY NOTES:

1. DUAL 9" PVC WATERSTOP, REFER TO DWG NO. S-54.
2. FILTER DRAIN OUTLET, REFER TO DWG NO. C-10.

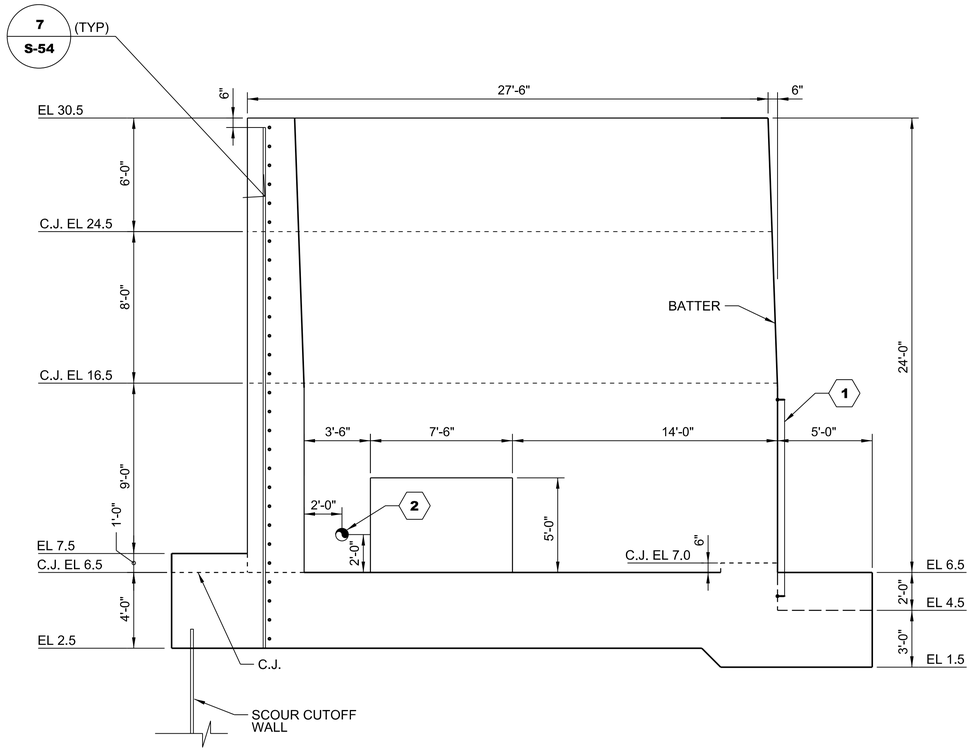

S / S-14 **ELEVATION**
SCALE: A

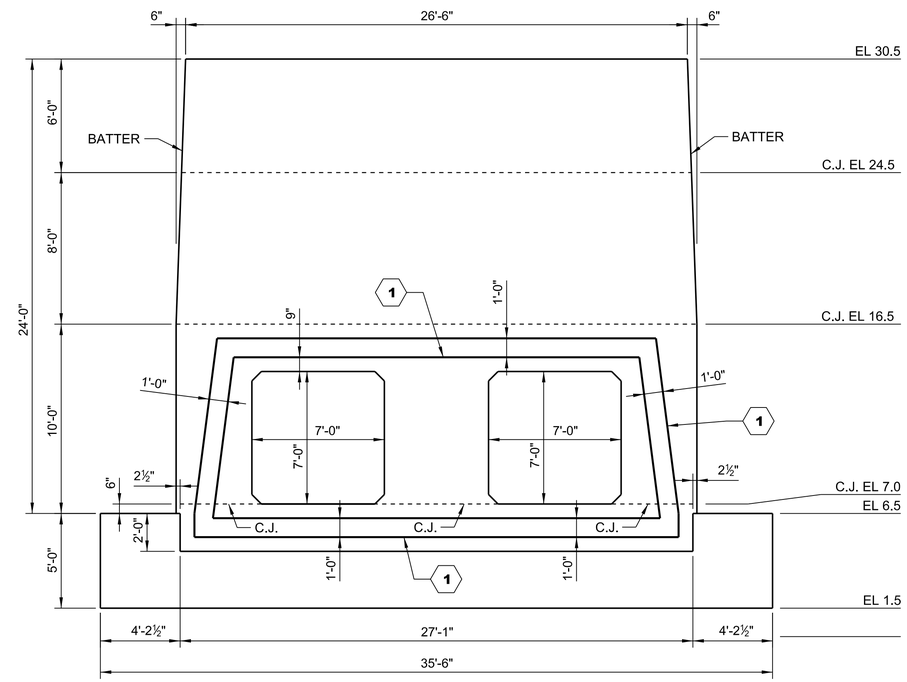

R / S-14 **ELEVATION**
SCALE: A

GRAPHIC SCALE

"A" 24" 12" 0 2' 4' 6' 8' 10'

US Army Corps of Engineers
Jacksonville District

No.	SYM	ZONE	DESCRIPTION
N	A-N	ABCD...	

DEPARTMENT OF THE ARMY
CORPS OF ENGINEERS
JACKSONVILLE DISTRICT
JACKSONVILLE, FLORIDA

DESIGNED BY: C.B.G.
DWN BY: W.E.S.
CKD BY: J.S.F.
SUBMITTED BY: N/A
DATE: MARCH 2015
SOLICITATION NO.: W912EP-16-R-0010
CONTRACT NO.: N/A
PLOT SCALE: AS SHOWN
PLOT DATE: Apr 25, 2016
FILE NUMBER: N/A
FILE NAME: 114527-HHDRCRIP3-SB315.DGN

HERBERT HOOVER DIKE REHABILITATION PROJECT
STRUCTURE REPLACEMENTS

S-291 (IP-3) RECONSTRUCTION

STRUCTURAL

LANDSIDE HEADWALL SECTIONS

DRAWING NO.
S-15

pw:\\COE-SAJPWP02\JAX.saj.ds.usace.army.mil:SAJPW\Documents\C&SF\Herbert Hoover Dike Rehabilitation\03-Culvert Rehabilitation\S-292(IP-1), S-290(IP-2), S-291(IP-3) Culvert Reconstruction\070 - Plans\IP-3\07 Structures\S-15

SAFETY ON THIS JOB DEPENDS ON YOU

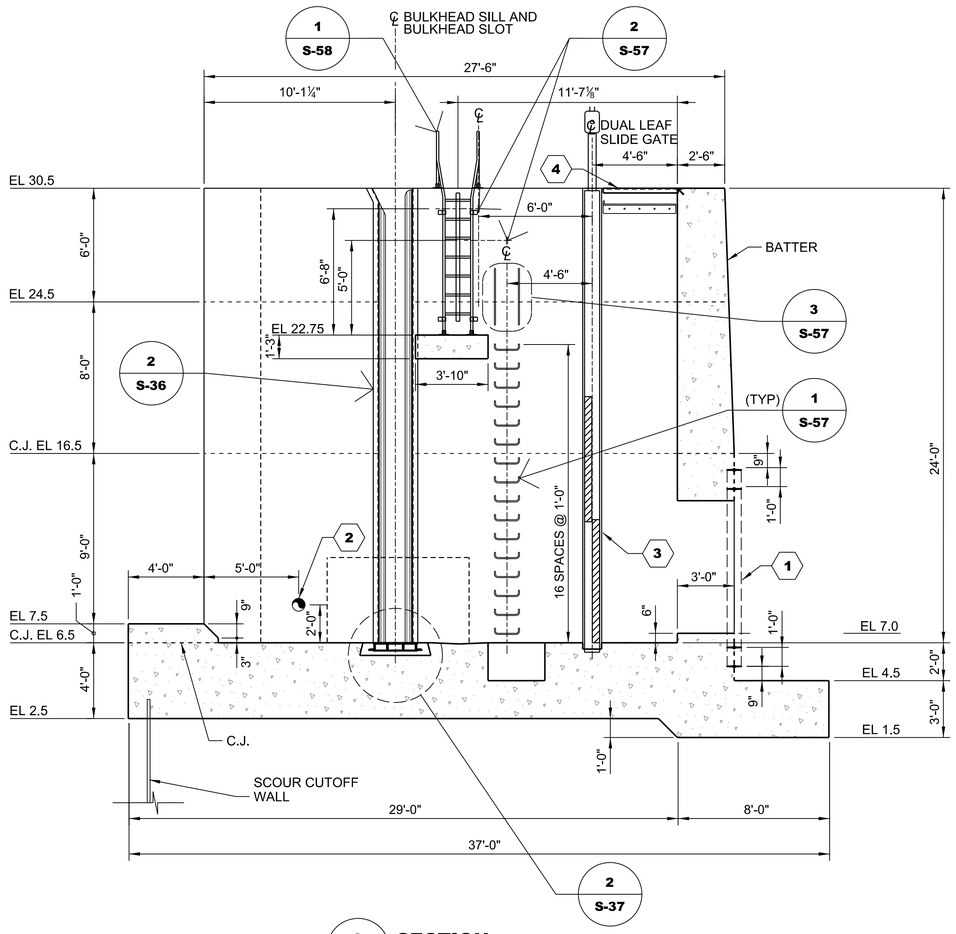

Q
S-14
SECTION
SCALE: A

KEY NOTES:

1. DUAL 9" PVC WATERSTOP, REFER TO DWG NO. S-54.
2. FILTER DRAIN OUTLET, SEE DWG NO. C-10.
3. BLOCKOUT FOR DUAL LEAF SLIDE GATE, CONTRACTOR SHALL COORDINATE OPENING SIZE AND LOCATION WITH GATE MANUFACTURER AND GATE ACTUATOR VENDOR.
4. PLATFORM EXTENSION MK S-40-2, REFER TO DWG NO S-40.

GRAPHIC SCALE

"A" 24" 12" 0 2' 4' 6' 8' 10'

US Army Corps of Engineers
Jacksonville District

No.	SYM	ZONE	DESCRIPTION
N	A	A-N	ABCD...

DESIGNED BY: C.B.G.
DWN BY: W.E.S.
CKD BY: J.S.F.
SUBMITTED BY: N/A
DATE: MARCH 2015
SOLICITATION NO.: W912EP-16-R-0010
CONTRACT NO.: N/A
PLOT SCALE: AS SHOWN
PLOT DATE: Apr 25, 2016
FILE NUMBER: N/A
FILE NAME: 114527-HHDRCRIP3-SB316.DGN

DEPARTMENT OF THE ARMY
CORPS OF ENGINEERS
JACKSONVILLE DISTRICT
JACKSONVILLE, FLORIDA

HERBERT HOOVER DIKE REHABILITATION PROJECT
STRUCTURE REPLACEMENTS

S-291 (IP-3) RECONSTRUCTION

STRUCTURAL

LANDSIDE HEADWALL SECTIONS

DRAWING NO.
S-16

pw:\\COE-SAJPW\P02JAX.saj.ds.usace.army.mil:SAJPW\Documents\C&SF\Herbert Hoover Dike Rehabilitation\03-Culvert Reconstruction\070 - Plans\IP-3\07 Structures\S-16

(S-292(IP-1), S-290(IP-2), S-291(IP-3) Culvert Reconstruction

SAFETY ON THIS JOB DEPENDS ON YOU

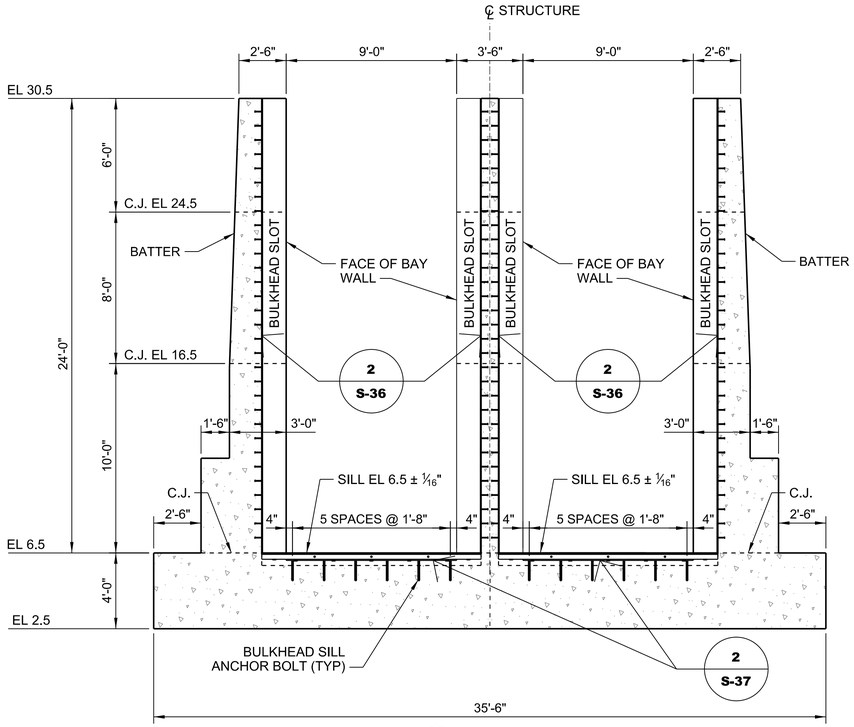

L S-14 **SECTION**
SCALE: A

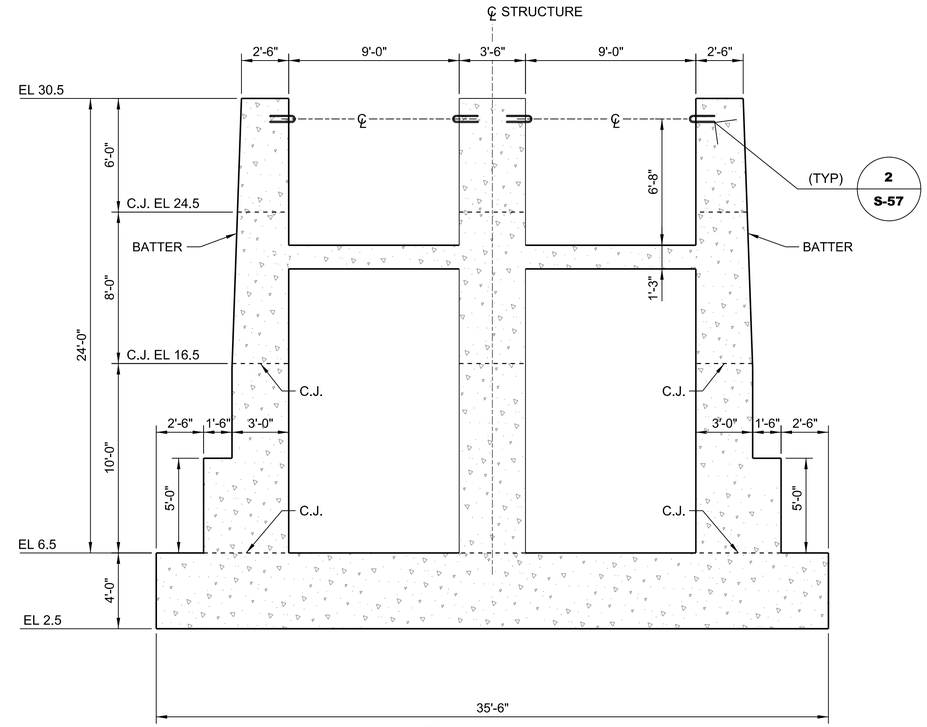

M S-14 **SECTION**
SCALE: A

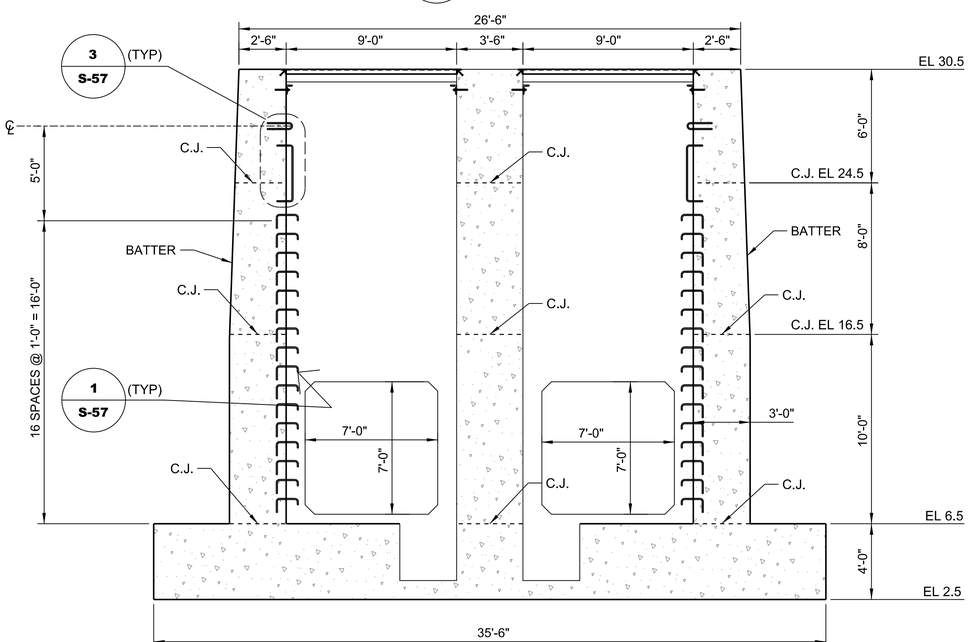

N S-14 **SECTION**
SCALE: A

GRAPHIC SCALE
"A" 24" 12" 0 2' 4' 6' 8' 10'

US Army Corps of Engineers
Jacksonville District

No.	SYM	ZONE	DESCRIPTION
N	A	A-N	ABCD...

DEPARTMENT OF THE ARMY
CORPS OF ENGINEERS
JACKSONVILLE DISTRICT
JACKSONVILLE, FLORIDA

DESIGNED BY: C.B.G.	DATE: MARCH 2015
DWN BY: W.E.S.	CKD BY: J.S.F.
SOLICITATION NO.: W912EP-16-R-0010	
SUBMITTED BY: N/A	CONTRACT NO.: N/A
PLOT SCALE: AS SHOWN	PLOT DATE: Apr 25, 2016
FILE NUMBER: N/A	
FILE NAME: 114527-HHDRCRIP3-SB317.DGN	

HERBERT HOOVER DIKE REHABILITATION PROJECT
STRUCTURE REPLACEMENTS

S-291 (IP-3) RECONSTRUCTION

STRUCTURAL

LANDSIDE HEADWALL SECTIONS

DRAWING NO.
S-17

pw:\\COE-SAJPWP02JAX.saj.ds.usace.army.mil:SAJPW\Documents\C&SF\Herbert Hoover Dike Rehabilitation\03-Culvert Rehabilitation\S-292(IP-1), S-290(IP-2), S-291(IP-3) Culvert Reconstruction\070 - Plans\IP-3\07 Structures\S-17

SAFETY ON THIS JOB DEPENDS ON YOU

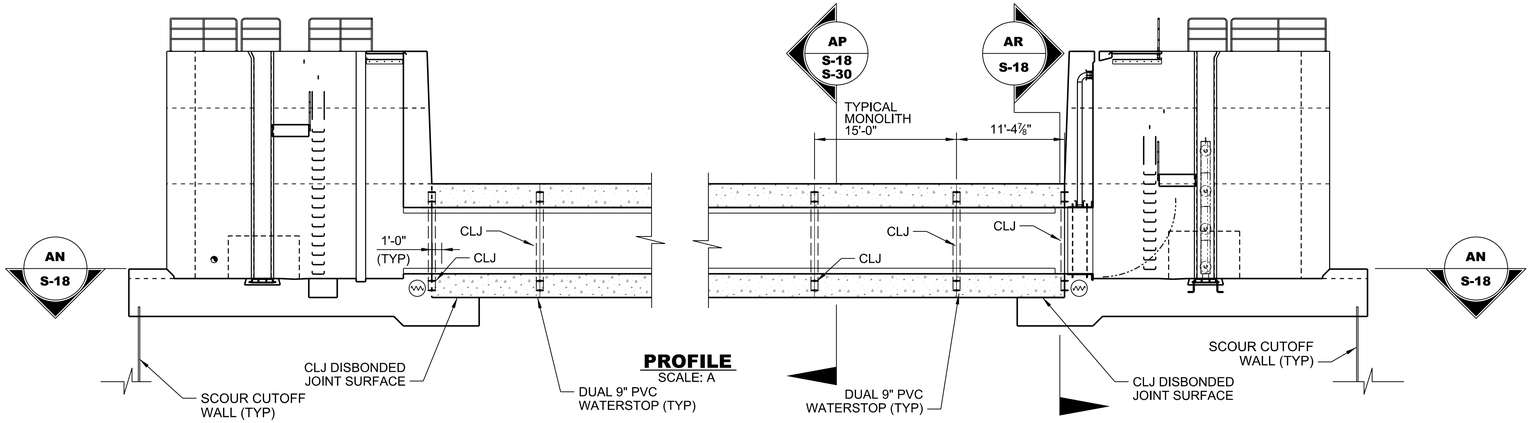

PROFILE
SCALE: A

LANDSIDE HEADWALL

LAKESIDE HEADWALL

NOTE: MONOLITH IS CONCRETE CAST WITH NO JOINTS OTHER THAN CONSTRUCTION JOINTS, i.e. A CONDUIT CONRETE SEGMENT LIMITED BY TWO ADJACENT VERTICAL CONTROL JOINTS

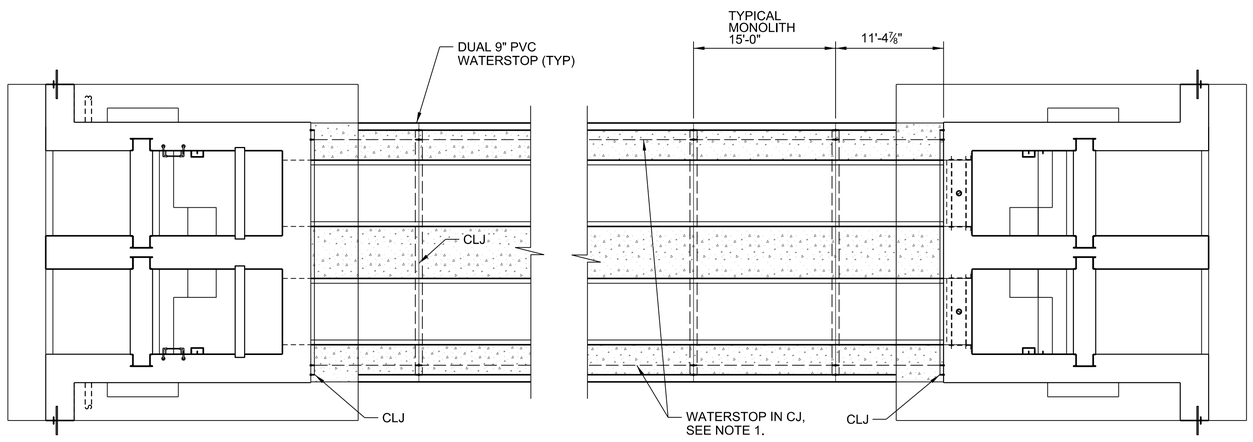

AN S-18 SECTION
SCALE: A

NOTES:

1. CONSTRUCTION JOINT WITH WATERSTOP TEEING INTO INSIDE PERIMETER WATERSTOP.

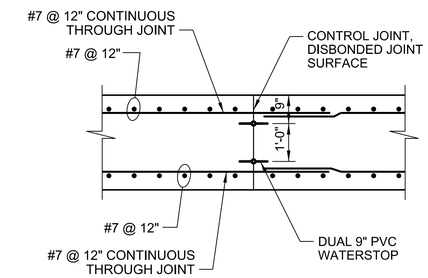

AS S-18 SECTION
SCALE: C

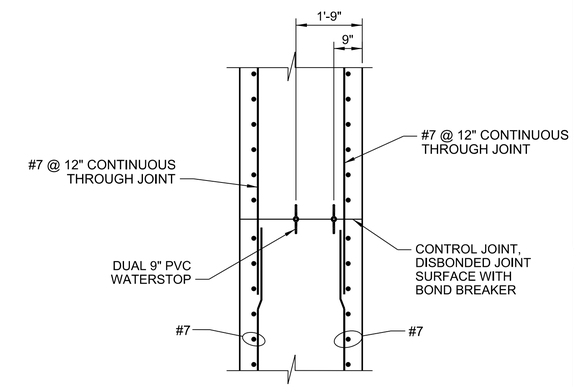

AT S-18 SECTION
SCALE: C

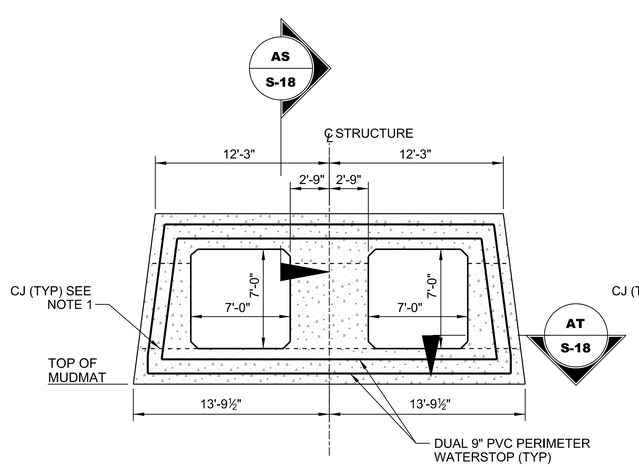

AP S-18 SECTION
SCALE: B

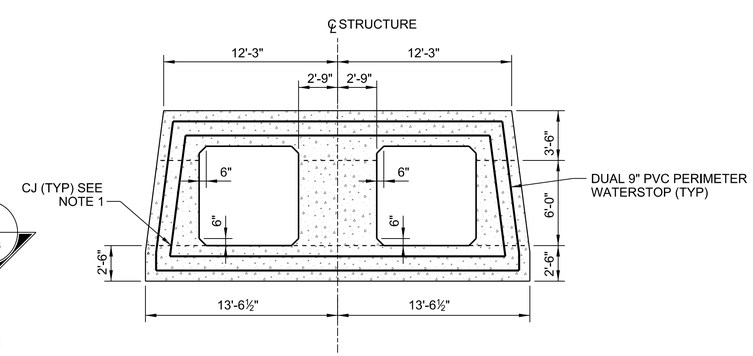

AR S-18 SECTION
SCALE: B

GRAPHIC SCALES

US Army Corps of Engineers
Jacksonville District

No.	SYM	ZONE	DESCRIPTION
N	A	A-N	ABCD...

DESIGNED BY: C.B.G. | DATE: MARCH 2015
DWN BY: W.E.S. | CKD BY: J.S.F. | SOLICITATION NO.: W912EP-16-R-0010
SUBMITTED BY: N/A | CONTRACT NO.: N/A
PLOT SCALE: AS NOTED | PLOT DATE: Apr 25, 2016 | FILE NUMBER: N/A
FILE NAME: 114527-HHDRCRIP3-SB118.DGN

DEPARTMENT OF THE ARMY
CORPS OF ENGINEERS
JACKSONVILLE DISTRICT
JACKSONVILLE, FLORIDA

HERBERT HOOVER DIKE REHABILITATION PROJECT
STRUCTURE REPLACEMENTS

S-291 (IP-3) RECONSTRUCTION
STRUCTURAL
OUTLET CONDUIT CONCRETE ENCASEMENT

DRAWING NO.
S-18

pw:\\COE-SAJPWP02\JAX.saj.ds.usace.army.mil:SAJPW\Documents\C&SF\Herbert Hoover Dike Rehabilitation\03-Culvert Rehabilitation\S-292(IP-1), S-290(IP-2), S-291(IP-3) Culvert Reconstruction\070 - Plans\IP-3\07 Structures\S-18

SAFETY ON THIS JOB DEPENDS ON YOU

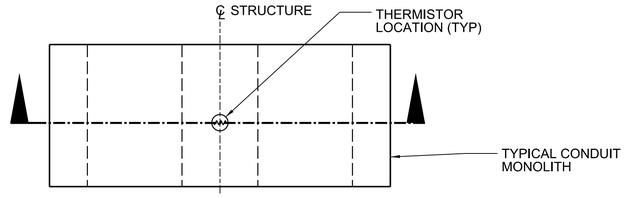

PLAN

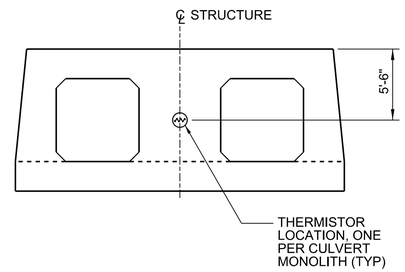

SECTION

THERMISTOR PLACEMENT DETAIL

SCALE: NTS

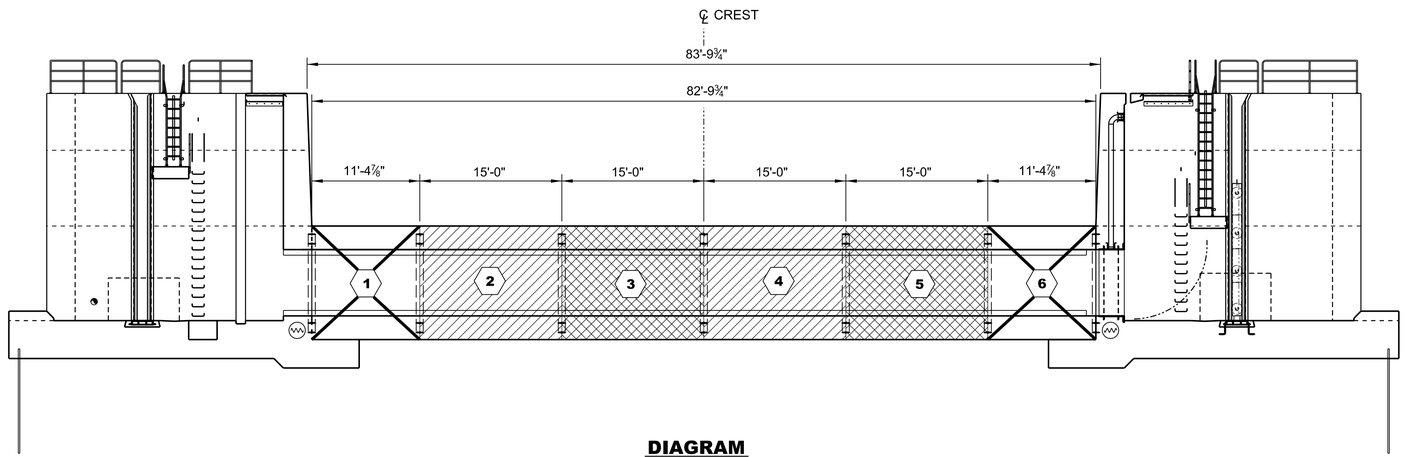

DIAGRAM

SCALE: A

CULVERT CONDUIT CONSTRUCTION SEQUENCE NOTES:

1. CONSTRUCT LAKESIDE AND LANDSIDE HEADWALLS.
2. PLACE FILTER SOIL AND MUD MAT.
3. PLACE PHASE 1 CONDUIT MONOLITHS 2, 4.
4. PHASE 1 MONOLITHS SHALL COOL TO AMBIENT TEMPERATURE AND SUPPORTING DATA SUBMITTED TO CONTRACTING OFFICER PRIOR TO PLACING PHASE 2 MONOLITHS. FOR EXAMPLE, MONOLITH 2 AND MONOLITH 4 SHALL COOL TO AMBIENT TEMPERATURE BEFORE PLACING MONOLITH 3. SIMILAR PROCEDURE APPLIES TO ALL PHASES.
5. AS PERMISSIBLE, PLACE PHASE 2 CONDUIT MONOLITHS 3, 5.
6. HEADWALLS AND ALL CONDUIT MONOLITHS SHALL COOL TO AMBIENT TEMPERATURE PRIOR TO PLACING PHASE 3 MONOLITHS.
7. AS PERMISSIBLE, PLACE PHASE 3 CONDUIT MONOLITHS 1 AND 6.
8. ALL CONCRETE OF HEADWALL AND CONDUIT SHALL REACH DESIGN STRENGTH PRIOR TO PLACING EMBANKMENT FILL AGAINST THE STRUCTURES.
9. AMBIENT TEMPERATURE SHALL BE DEFINED, FOR THE PURPOSE OF CULVERT CONDUIT CONSTRUCTION SEQUENCE, AS THE MEAN AVERAGE DAILY TEMPERATURE (DEGREE FAHRENHEIT BY MONTH), PLUS FOUR DEGREES FAHRENHEIT, FOR THE MONTH IN WHICH PHASE 2 OR PHASE 3 MONOLITHS WILL BE PLACED. MEAN AVERAGE DAILY TEMPERATURE BY MONTH SHALL BE AS REPORTED BY THE NATIONAL CLIMATIC DATA CENTER (www.ncdc.noaa.gov) FOR STATION NUMBER USC00080992, BRIGHTON RESERVATION FL. CONTRACTOR SHALL USE THE MONTHLY NORMAL 30-YEAR AVERAGE FOR THE 1981-2010 PERIOD OF RECORD.

LEGEND:

- THERMISTOR
- 21 MONOLITH NUMBER
- PHASE 1 MONOLITH
- PHASE 2 MONOLITH
- PHASE 3 MONOLITH

GRAPHIC SCALE

"A" 48" 24" 0 4' 8' 12' 16' 20'

US Army Corps of Engineers, Jacksonville District

No.	SYM	ZONE	DESCRIPTION
N	A	A-N	ABCD...

DEPARTMENT OF THE ARMY
CORPS OF ENGINEERS
JACKSONVILLE DISTRICT
JACKSONVILLE, FLORIDA

DESIGNED BY: C.B.G.	DATE: MARCH 2015
DWN BY: W.E.S.	CKD BY: J.S.F.
SOLICITATION NO.: W912EP-16-R-0010	
SUBMITTED BY: N/A	CONTRACT NO.: N/A
PLOT SCALE: AS SHOWN	PLOT DATE: Apr 25, 2016
FILE NUMBER: N/A	
FILE NAME: 114527-HHDRCRIP3-SB619.DGN	

HERBERT HOOVER DIKE REHABILITATION PROJECT
STRUCTURE REPLACEMENTS

S-291 (IP-3) RECONSTRUCTION

STRUCTURAL
OUTLET CONDUIT
CONCRETE ENCASEMENT CONSTRUCTION SEQUENCE

DRAWING NO.

S-19

pw:\\COE-SAJPW\P02JAX.saj.ds.usace.army.mil:SAJPW\Documents\C&SF\Herbert Hoover Dike Rehabilitation\03-Culvert Rehabilitation\S-292(IP-1), S-290(IP-2), S-291(IP-3) Culvert Reconstruction\070 - Plans\IP-3\07 Structures\S-19

SAFETY ON THIS JOB DEPENDS ON YOU

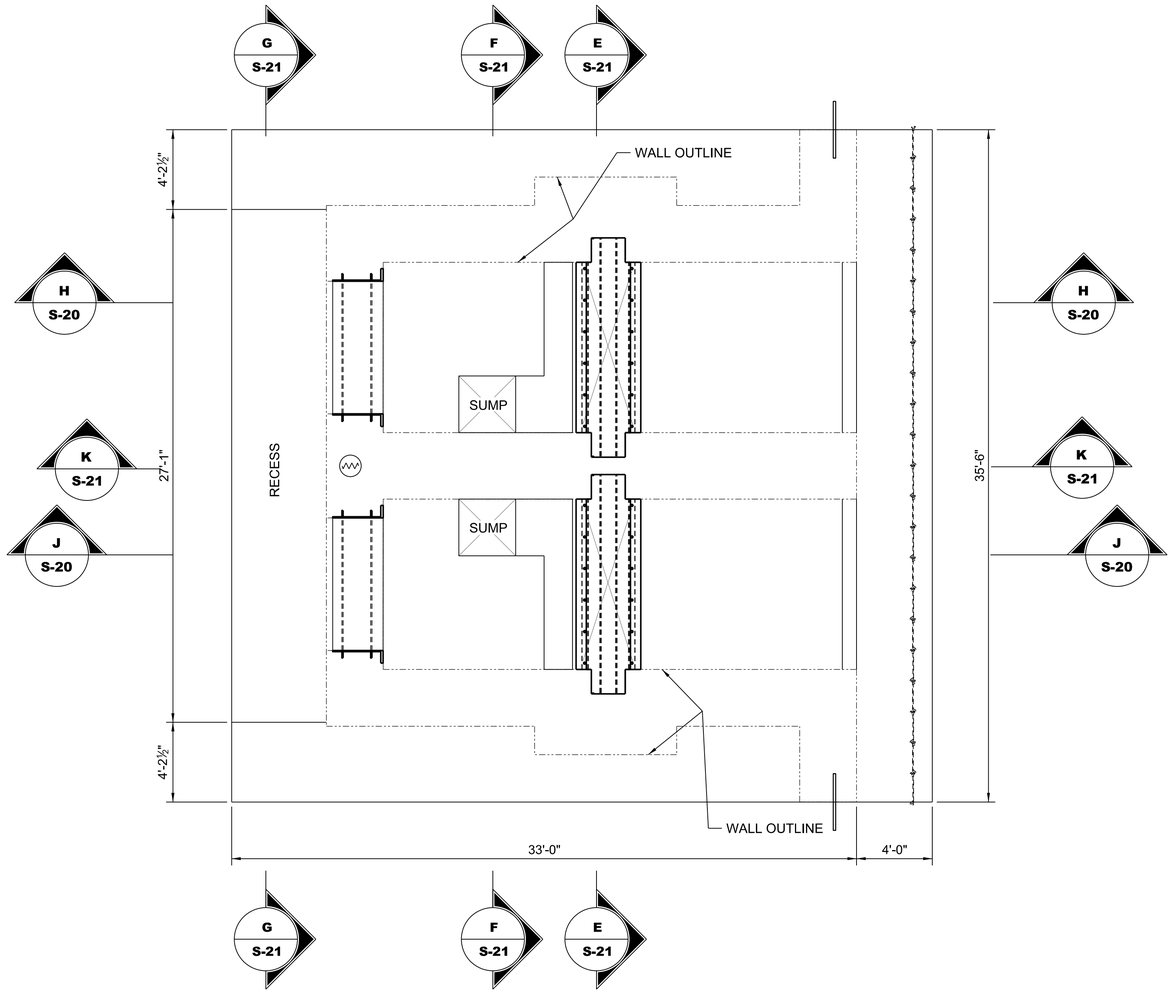

PLAN
SCALE: A

NOTES:

1. FOR REINFORCEMENT LAP SPLICE AND EMBEDMENT LENGTHS SEE TABLES ON SHEET S-01.
2. FOUNDATION REINFORCEMENT PENETRATES SCOUR CUT-OFF WALL. SEE SPECIFICATION 31 41 16 FOR METHODOLOGY TO CUT HOLES IN SHEET PILING.

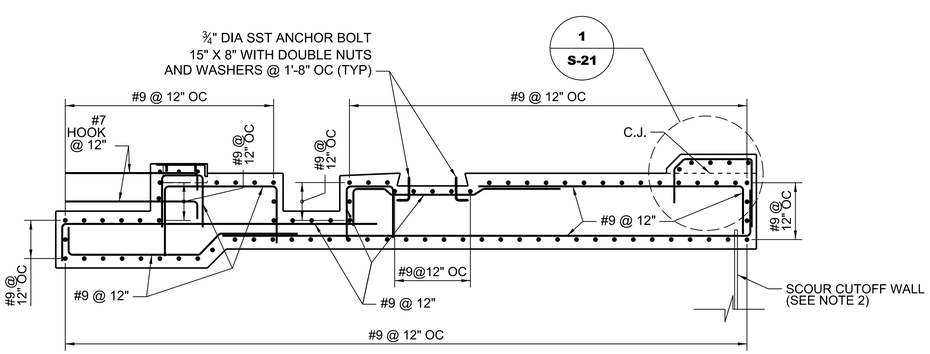

J S-20 SECTION
SCALE: A

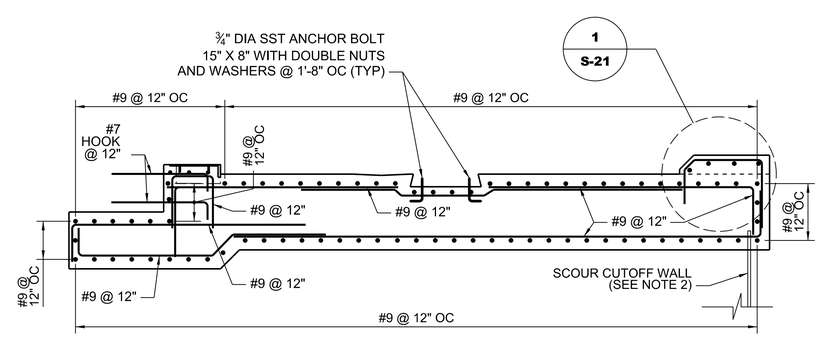

H S-20 SECTION
SCALE: A

GRAPHIC SCALE
"A" 24" 12" 0 2' 4' 6' 8' 10'

US Army Corps of Engineers, Jacksonville District

No.	SYM	ZONE	DESCRIPTION
N	A	A-N	ABCD...

DEPARTMENT OF THE ARMY
CORPS OF ENGINEERS
JACKSONVILLE DISTRICT
JACKSONVILLE, FLORIDA

DESIGNED BY: C.B.G.
DWN BY: W.E.S.
CKD BY: J.S.F.
SUBMITTED BY: N/A
PLOT SCALE: AS SHOWN
PLOT DATE: Apr 25, 2014
DATE: MARCH 2015
SOLICITATION NO.: W912EP-16-R-0010
CONTRACT NO.: N/A
FILE NUMBER: N/A
FILE NAME: 114527-HHDRCRIP3-SB120.DGN

HERBERT HOOVER DIKE REHABILITATION PROJECT
STRUCTURE REPLACEMENTS

S-291 (IP-3) RECONSTRUCTION
STRUCTURAL
LAKESIDE HEADWALL REINFORCEMENT

DRAWING NO.
S-20

pw:\\COE-SAJPW\P02JAX.saj.ds.usace.army.mil:SAJPW\Documents\C&SF\Herbert Hoover Dike Rehabilitation\03-Culvert Reconstruction\070 - Plans\IP-3\07 Structures\S-20

SAFETY ON THIS JOB DEPENDS ON YOU

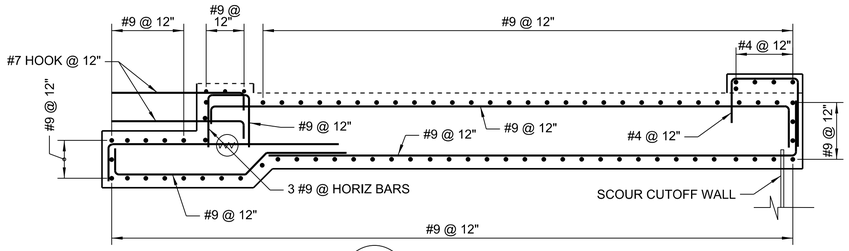

K / S-20 SECTION
SCALE: A

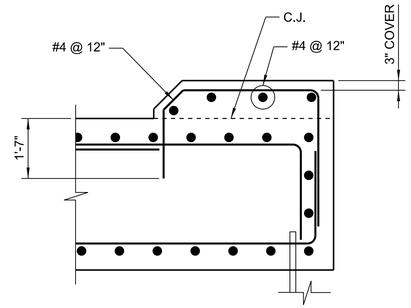

1 / S-20 DETAIL
SCALE: B

NOTES:

1. FOR REINFORCEMENT LAP SPLICE AND EMBEDMENT LENGTHS SEE TABLES ON SHEET S-01.

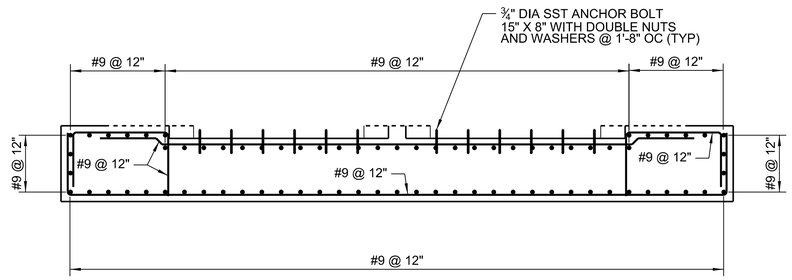

E / S-20 SECTION
SCALE: A

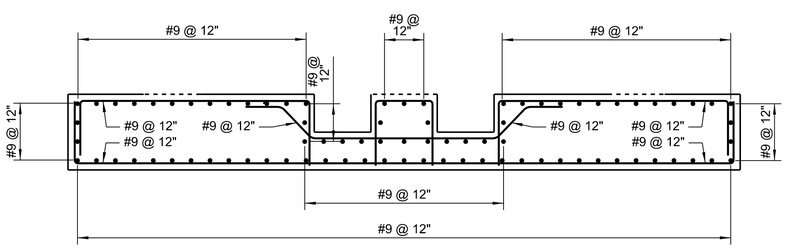

F / S-20 SECTION
SCALE: A

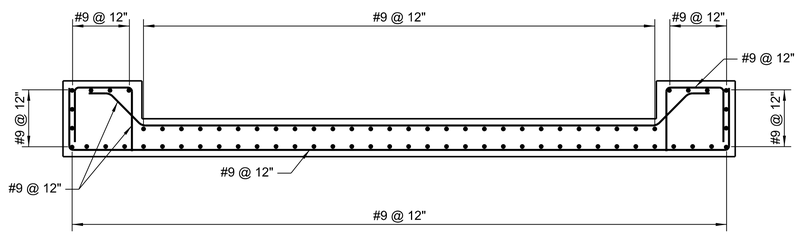

G / S-20 SECTION
SCALE: A

GRAPHIC SCALES

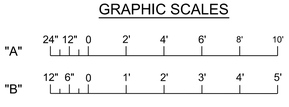

US Army Corps of Engineers
Jacksonville District

No.	SYM	ZONE	DESCRIPTION
N	A	A-N	ABCD...

DEPARTMENT OF THE ARMY
CORPS OF ENGINEERS
JACKSONVILLE DISTRICT
JACKSONVILLE, FLORIDA

DESIGNED BY: C.B.G.
DWN BY: W.E.S.
CKD BY: J.S.F.
SUBMITTED BY: N/A
DATE: MARCH 2015
SOLICITATION NO.: W912EP-16-R-0010
CONTRACT NO.: N/A
PLOT SCALE: AS SHOWN
PLOT DATE: Apr 25, 2016
FILE NUMBER: N/A
FILE NAME: 114527-HHDRCRIP3-SB121.DGN

HERBERT HOOVER DIKE REHABILITATION PROJECT
STRUCTURE REPLACEMENTS

S-291 (IP-3) RECONSTRUCTION

STRUCTURAL

LAKESIDE HEADWALL REINFORCEMENT

DRAWING NO.
S-21

pw:\\COE-SAJPW02JAX.saj.ds.usace.army.mil:SAJPW\Documents\C&SF\Herbert Hoover Dike Rehabilitation\03-Culvert Rehabilitation\S-292(IP-1), S-290(IP-2), S-291(IP-3) Culvert Reconstruction\070 - Plans\IP-3\07 Structures\S-21

SAFETY ON THIS JOB DEPENDS ON YOU

NOTES:

1. FOR REINFORCEMENT LAP SPLICE AND EMBEDMENT LENGTHS SEE TABLES ON SHEET S-01.

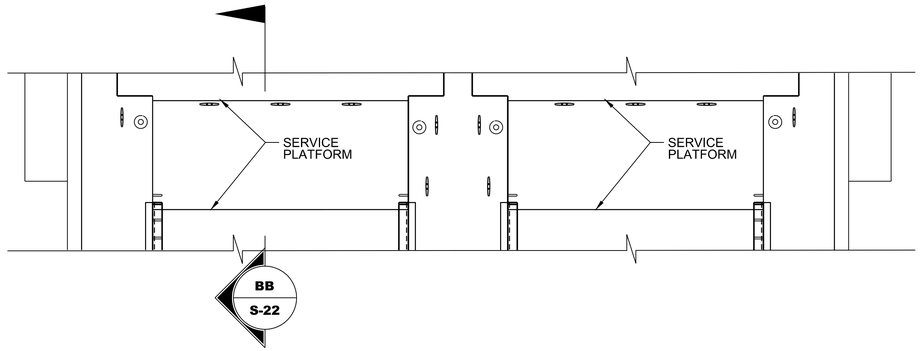

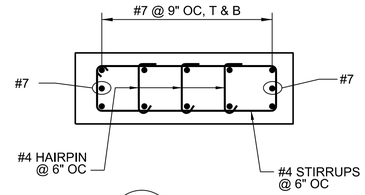

BB S-22 **SECTION** SCALE: B

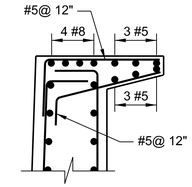

BF S-22 **SECTION** SCALE: B

BA S-22 **SECTION** SCALE: A

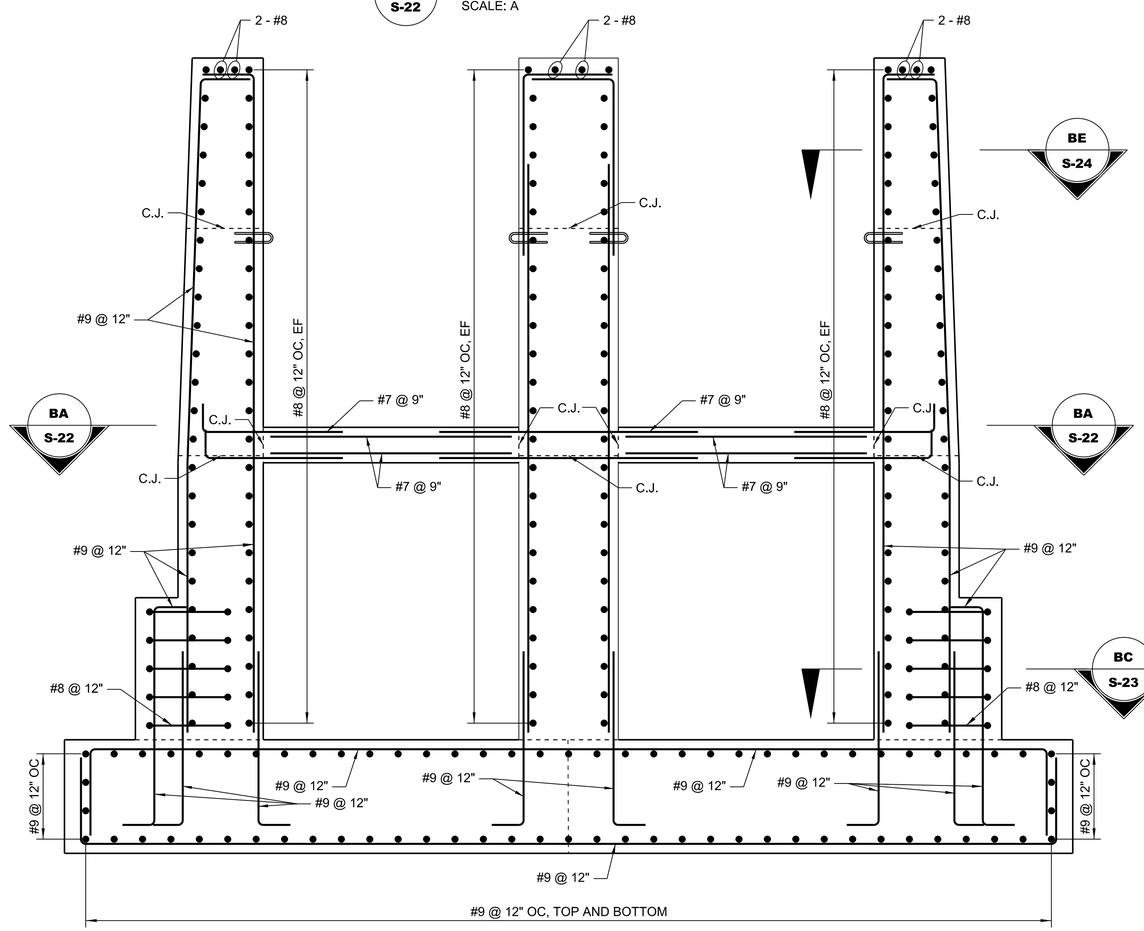

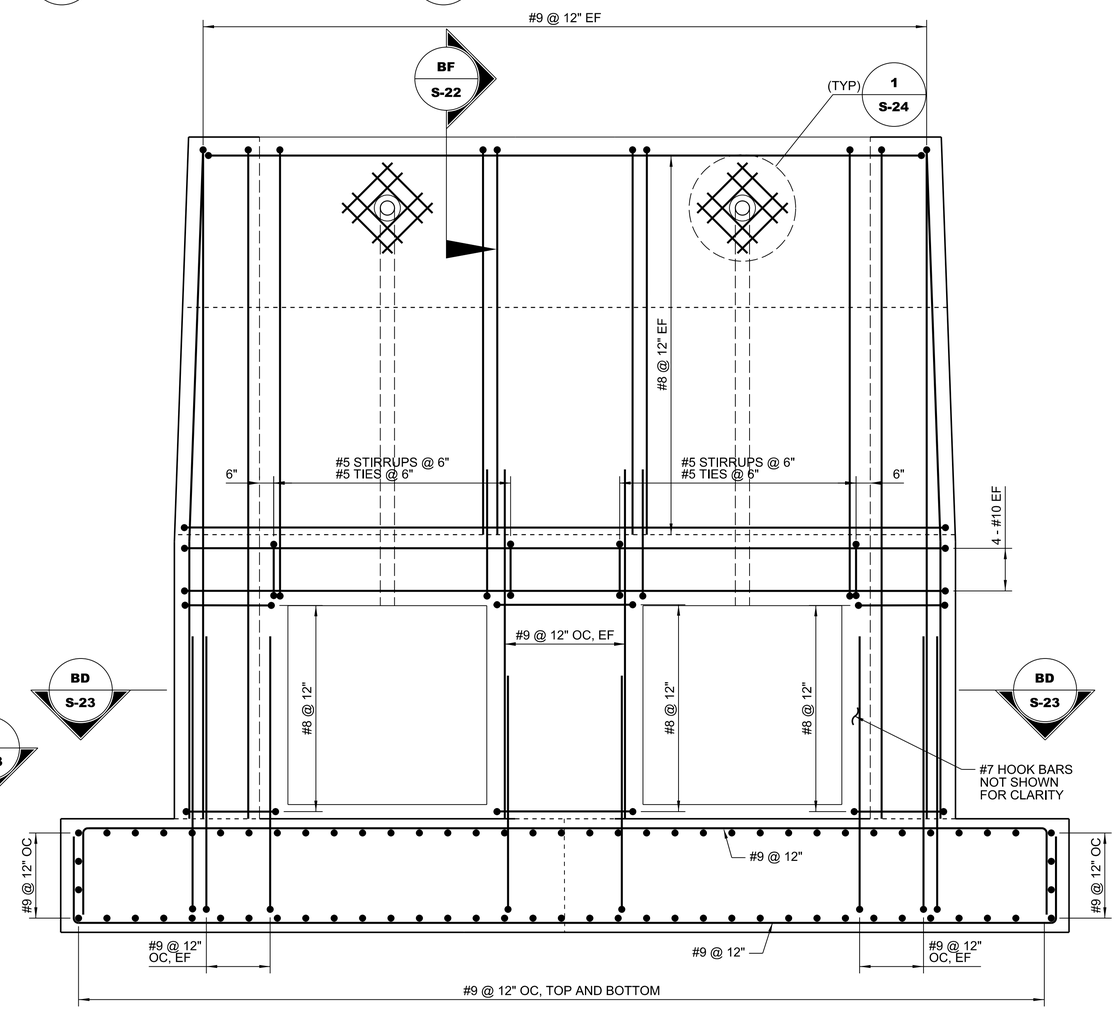

T S-07 **SECTION** SCALE: A

M S-07 **SECTION** SCALE: A

GRAPHIC SCALES

"A" 24" 12" 0 2' 4' 6'

"B" 12" 6" 0 1' 2' 3'

US Army Corps of Engineers
Jacksonville District

No.	SYM	ZONE	DESCRIPTION
N	A	A-N	ABCD...

DEPARTMENT OF THE ARMY
CORPS OF ENGINEERS
JACKSONVILLE DISTRICT
JACKSONVILLE, FLORIDA

DESIGNED BY: C.B.G.
DWN BY: W.E.S.
CKD BY: J.S.F.
SUBMITTED BY: N/A
DATE: MARCH 2015
SOLICITATION NO.: W912EP-16-R-0010
CONTRACT NO.: N/A
PLOT SCALE: As Shown
PLOT DATE: Apr 25, 2016
FILE NUMBER: N/A
FILE NAME: 114527-HHDRCRIP3-SB322.DGN

HERBERT HOOVER DIKE REHABILITATION PROJECT
STRUCTURE REPLACEMENTS

S-291 (IP-3) RECONSTRUCTION

STRUCTURAL

LAKESIDE HEADWALL REINFORCEMENT

DRAWING NO.

S-22

pw:\\COE-SAJPWP02\JAX.saj.ds.usace.army.mil:SAJPW\Documents\C&SF\Herbert Hoover Dike Rehabilitation\03-Culvert Rehabilitation\S-292(IP-1), S-290(IP-2), S-291(IP-3) Culvert Reconstruction\070 - Plans\IP-3\07 Structures\S-22

SAFETY ON THIS JOB DEPENDS ON YOU

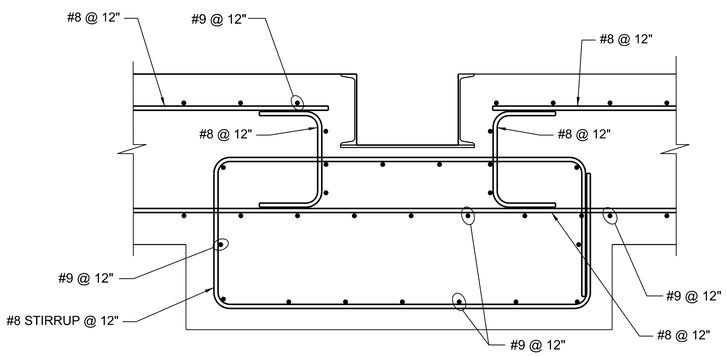

BC / S-22 **SECTION**
SCALE: B

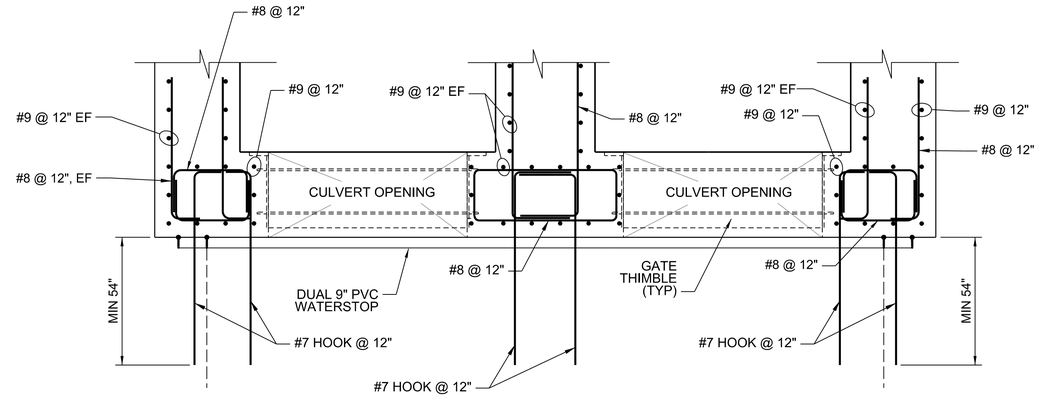

BD / S-22 **SECTION**
SCALE: A

NOTES:

1. FOR REINFORCEMENT LAP SPLICE AND EMBEDMENT LENGTHS SEE TABLES ON SHEET S-01.
2. #7 HOOK BARS SHALL MATCH REINFORCEMENT IN CONDUIT.

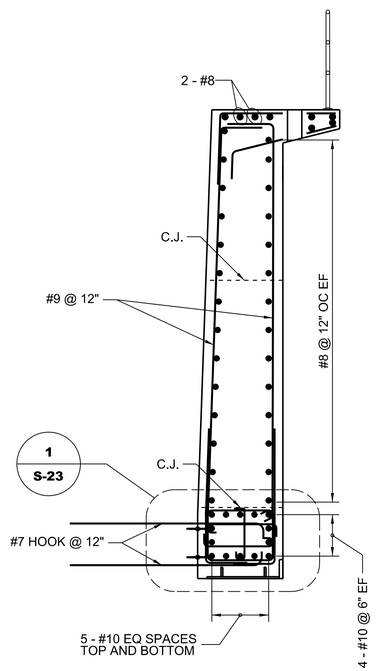

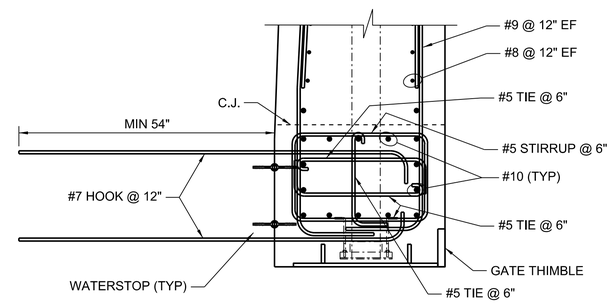

1 / S-23 **DETAIL**
SCALE: B

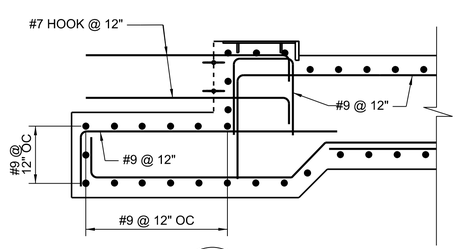

S / S-07 **SECTION**
SCALE: A

GRAPHIC SCALES

"A" 24" 12" 0 2' 4' 6'

"B" 12" 6" 0 1' 2' 3'

US Army Corps of Engineers
Jacksonville District

No.	STM	ZONE	DESCRIPTION
N	A	A-N	ABCD...

DEPARTMENT OF THE ARMY
CORPS OF ENGINEERS
JACKSONVILLE DISTRICT
JACKSONVILLE, FLORIDA

DESIGNED BY: C.B.G.
DWN BY: W.E.S.
CKD BY: J.S.F.
SUBMITTED BY: N/A
PLOT SCALE: N/A
PLOT DATE: Apr 25, 2014
FILE NUMBER: N/A
FILE NAME: 114527-HHDRCRIP3-SB323.DGN
DATE: MARCH 2015
SOLICITATION NO.: W912EP-16-R-0010
CONTRACT NO.: N/A

HERBERT HOOVER DIKE REHABILITATION PROJECT
STRUCTURE REPLACEMENTS

S-291 (IP-3) RECONSTRUCTION

STRUCTURAL

LAKESIDE HEADWALL REINFORCEMENT

DRAWING NO.
S-23

pw:\\COE-SAJ\PWP02\JAX.saj.ds.usace.army.mil:SAJ\PW\Documents\C&SF\Herbert Hoover Dike Rehabilitation\03-Culvert Rehabilitation\S-292(IP-1), S-290(IP-2), S-291(IP-3) Culvert Reconstruction\070 - Plans\IP-3\07 Structures\S-23

SAFETY ON THIS JOB DEPENDS ON YOU

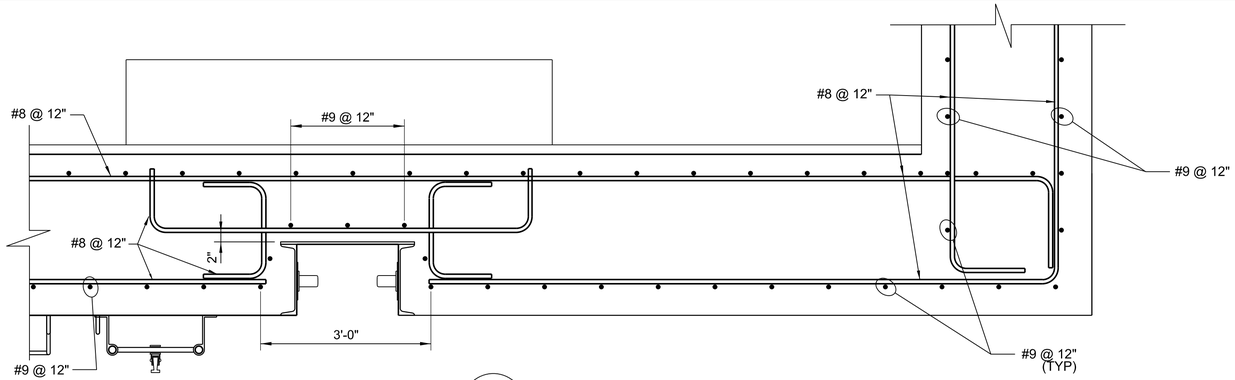

BE / S-22 **SECTION**
SCALE: B

NOTES:

1. FOR REINFORCEMENT LAP SPLICE AND EMBEDMENT LENGTHS SEE TABLES ON SHEET S-01.
2. FOUNDATION REINFORCEMENT PENETRATES SCOUR CUT OFF WALL. SEE SPECIFICATION 31 41 16 FOR METHODOLOGY TO CUT HOLES IN SHEET PILING.
3. #7 HOOK BARS SHALL MATCH REINFORCEMENT IN CONDUIT.

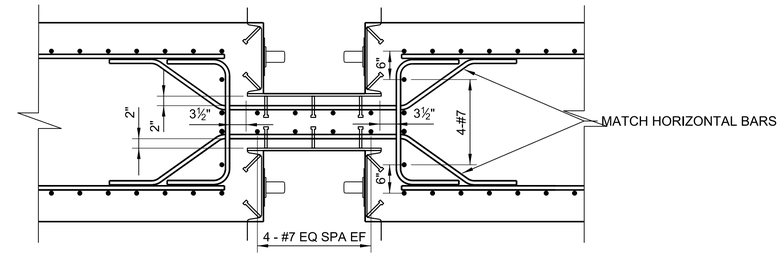

BF / S-24 **SECTION**
SCALE: A

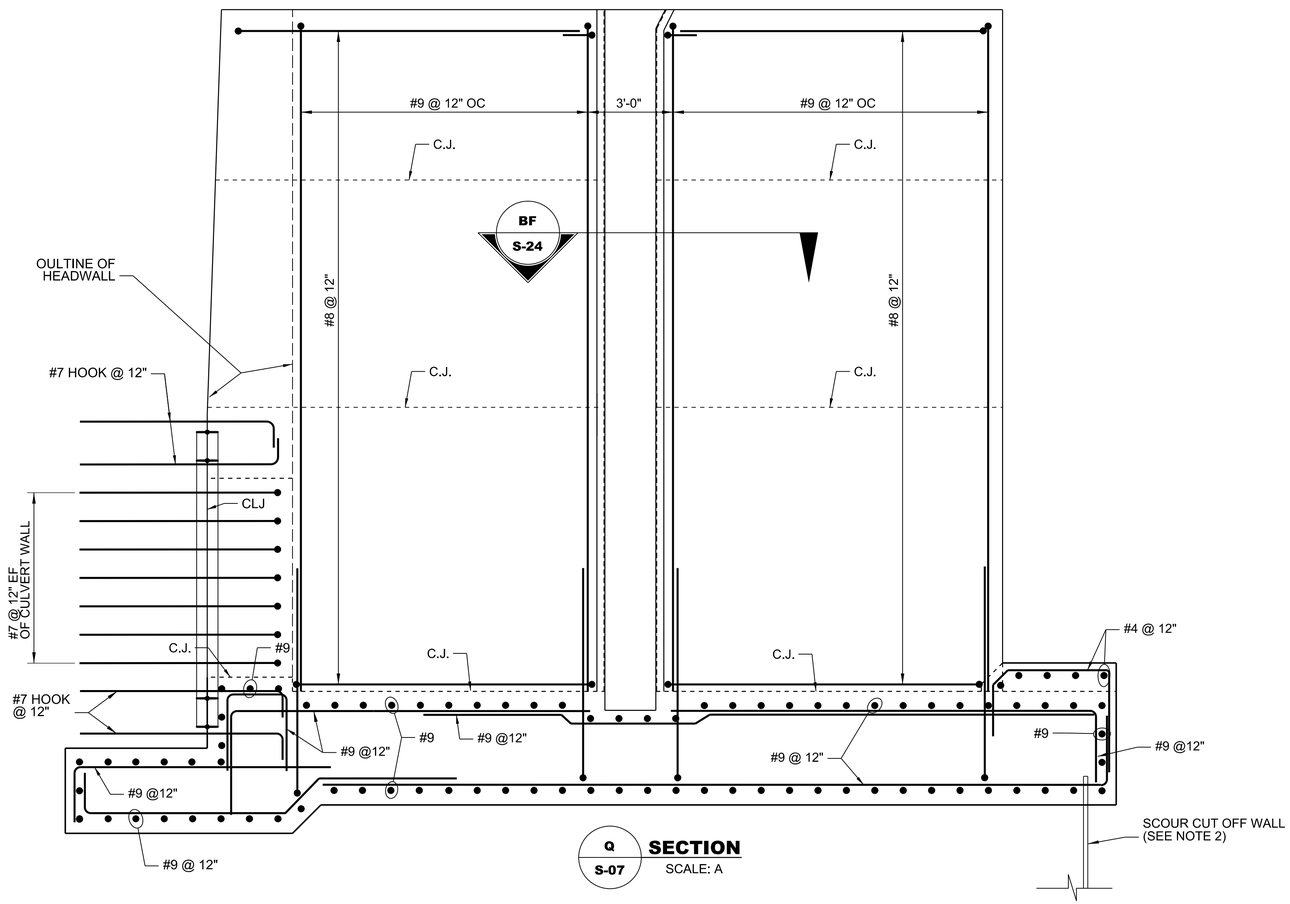

Q / S-07 **SECTION**
SCALE: A

NOTE: HEADWALL REINFORCEMENT NOT SHOWN FOR CLARITY

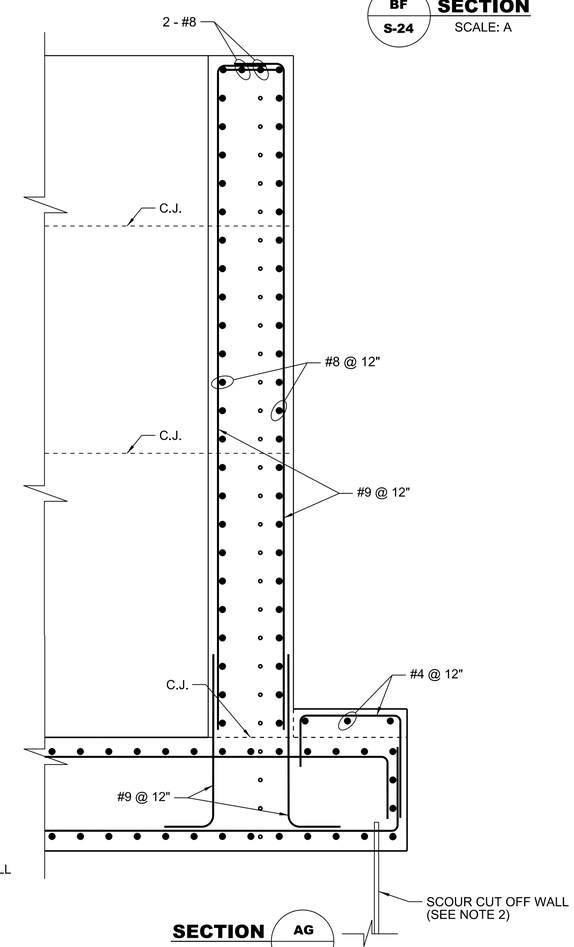

SECTION AG / S-07
SCALE: A

GRAPHIC SCALES

"A" 24" 12" 0 2' 4' 6'

"B" 12" 6" 0 1' 2' 3'

US Army Corps of Engineers
Jacksonville District

No.	SYM	ZONE	DESCRIPTION
N	A	A-N	ABCD...

DEPARTMENT OF THE ARMY
CORPS OF ENGINEERS
JACKSONVILLE DISTRICT
JACKSONVILLE, FLORIDA

DESIGNED BY: C.B.G.	DATE: MARCH 2015
DWN BY: W.E.S.	CKD BY: J.S.F.
SOLICITATION NO.: W912EP-16-R-0010	
SUBMITTED BY: N/A	CONTRACT NO.: N/A
PLOT SCALE: AS SHOWN	PLOT DATE: Apr 25, 2016
FILE NUMBER: N/A	
FILE NAME: 114527-HHDRCRIP3-SB324.DGN	

HERBERT HOOVER DIKE REHABILITATION PROJECT
STRUCTURE REPLACEMENTS

S-291 (IP-3) RECONSTRUCTION

STRUCTURAL
LAKESIDE HEADWALL REINFORCEMENT

DRAWING NO.
S-24

pw:\\COE-SAJPWP02\JAX.saj.ds.usace.army.mil:SAJPW\Documents\C&SF\Herbert Hoover Dike Rehabilitation\03-Culvert Rehabilitation\S-292(IP-1), S-290(IP-2), S-291(IP-3) Culvert Reconstruction\070 - Plans\IP-3\07 Structures\S-24

SAFETY ON THIS JOB DEPENDS ON YOU

NOTES:

1. FOR REINFORCEMENT LAP SPLICE AND EMBEDMENT LENGTHS SEE TABLES ON SHEET S-01.
2. FOUNDATION REINFORCEMENT PENETRATES SCOUR CUT-OFF WALL. SEE SPECIFICATION 31 41 16 FOR METHODOLOGY TO CUT HOLES IN SHEET PILING.

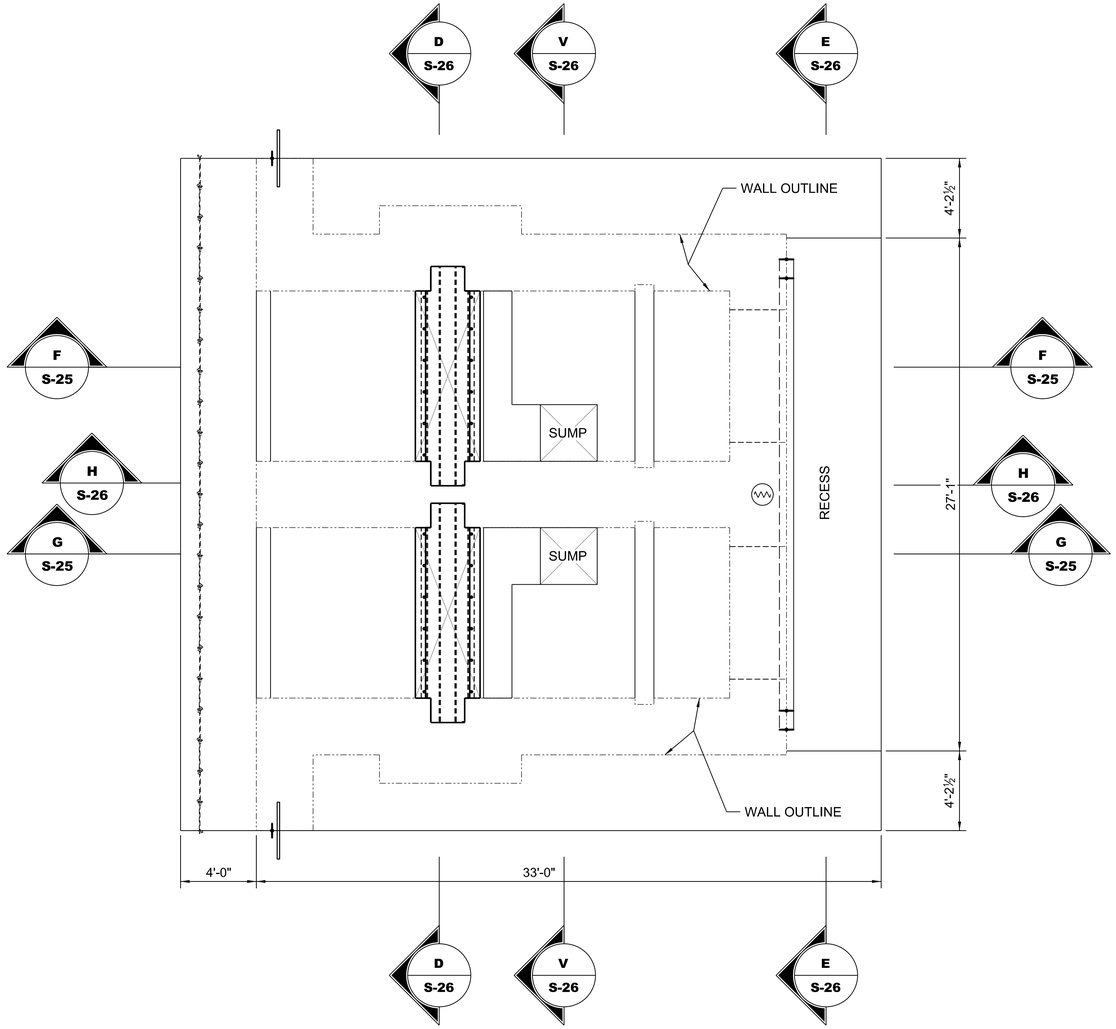

PLAN - EL 6.0
SCALE: A

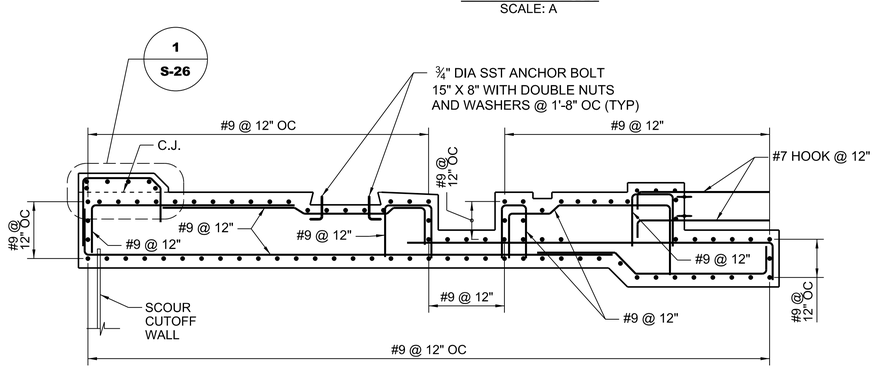

G S-25 SECTION
SCALE: A

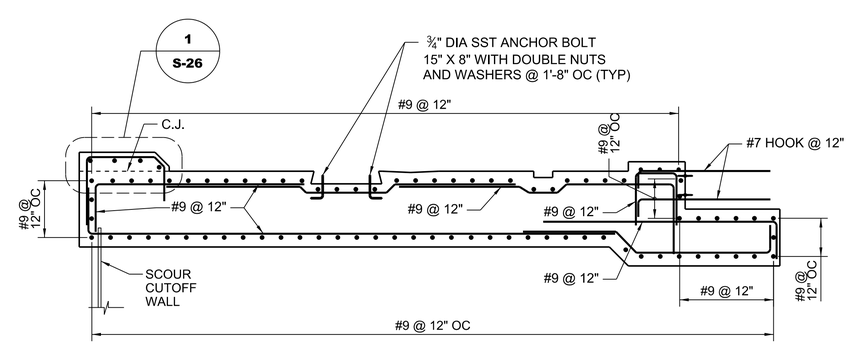

F S-25 SECTION
SCALE: A

GRAPHIC SCALE
"A" 24" 12" 0 2' 4' 6' 8' 10'

US Army Corps of Engineers, Jacksonville District

No.	SYM	ZONE	DESCRIPTION
N	A	A-N	ABCD...

DEPARTMENT OF THE ARMY
CORPS OF ENGINEERS
JACKSONVILLE DISTRICT
JACKSONVILLE, FLORIDA

DESIGNED BY: C.B.G.
DATE: MARCH 2015
DWN BY: W.E.S.
CKD BY: J.S.F.
SOLICITATION NO.: W912EP-16-R-0010
SUBMITTED BY: N/A
CONTRACT NO.: N/A
PLOT SCALE: AS SHOWN
PLOT DATE: Apr 25, 2016
FILE NUMBER: N/A
FILE NAME: 114527-HHDRCRIP3-SB125.DGN

HERBERT HOOVER DIKE REHABILITATION PROJECT
STRUCTURE REPLACEMENTS

S-291 (IP-3) RECONSTRUCTION

STRUCTURAL
LANDSIDE HEADWALL REINFORCEMENT

DRAWING NO.
S-25

pw:\\COE-SAJPWP02JAX.saj.ds.usace.army.mil:SAJPW\Documents\C&SF\Herbert Hoover Dike Rehabilitation\03-Culvert Reconstruction\070 - Plans\IP-3\07 Structures\S-25
S-292(IP-1), S-290(IP-2), S-291(IP-3) Culvert Reconstruction

SAFETY ON THIS JOB DEPENDS ON YOU

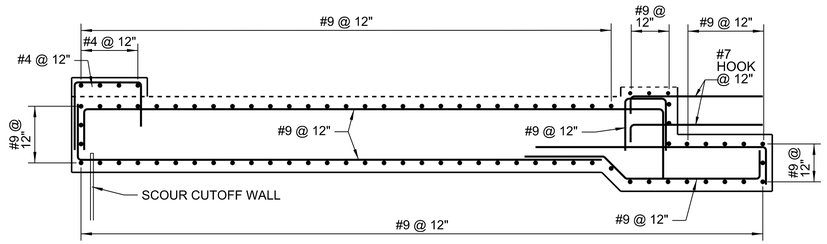

H / S-25 **SECTION**
SCALE: A

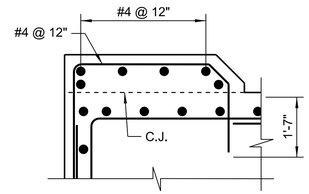

1 / S-25 **DETAIL**
SCALE: B

NOTES:

1. FOR REINFORCEMENT LAP SPLICE AND EMBEDMENT LENGTHS SEE TABLES ON SHEET S-01.

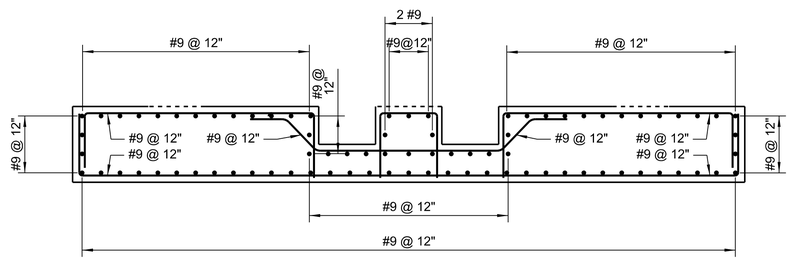

V / S-25 **SECTION**
SCALE: A

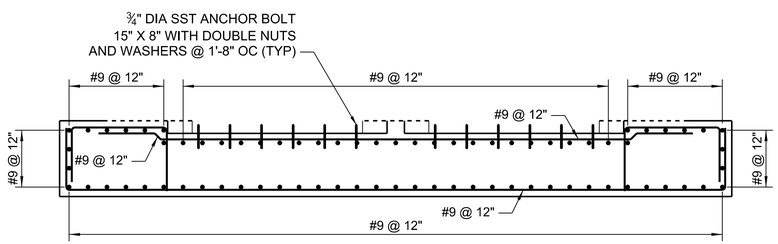

D / S-25 **SECTION**
SCALE: A

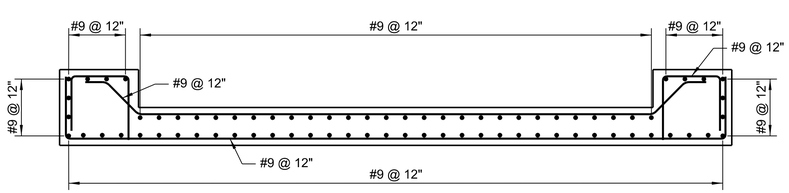

E / S-25 **SECTION**
SCALE: A

GRAPHIC SCALES

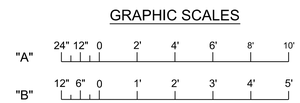

US Army Corps of Engineers
Jacksonville District

No.	SYM	ZONE	DESCRIPTION
N	A	A-N	ABCD...

DEPARTMENT OF THE ARMY
CORPS OF ENGINEERS
JACKSONVILLE DISTRICT
JACKSONVILLE, FLORIDA

DESIGNED BY: C.B.G.	DATE: MARCH 2015
DWN BY: W.E.S.	CKD BY: J.S.F.
SOLICITATION NO.: W912EP-16-R-0010	
SUBMITTED BY: N/A	CONTRACT NO.: N/A
PLOT SCALE: AS SHOWN	PLOT DATE: Apr 25, 2016
FILE NUMBER: N/A	
FILE NAME: 114527-HHDRCRIP3-SB1269.DGN	

HERBERT HOOVER DIKE REHABILITATION PROJECT
STRUCTURE REPLACEMENTS

S-291 (IP-3) RECONSTRUCTION

STRUCTURAL
LANDSIDE HEADWALL REINFORCEMENT

DRAWING NO.
S-26

pw:\\COE-SAJPW\P02\JAX.saj.ds.usace.army.mil:SAJPW\Documents\C&SF\Herbert Hoover Dike Rehabilitation\03-Culvert Rehabilitation\S-292(IP-1), S-290(IP-2), S-291(IP-3) Culvert Reconstruction\070 - Plans\IP-3\07 Structures\S-26

SAFETY ON THIS JOB DEPENDS ON YOU

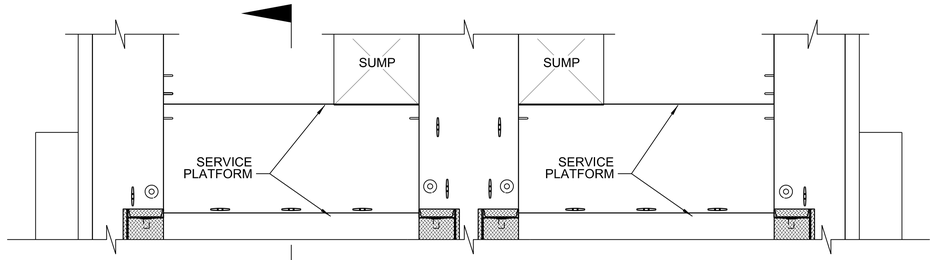

AW S-27

AV S-27 **SECTION** SCALE: A

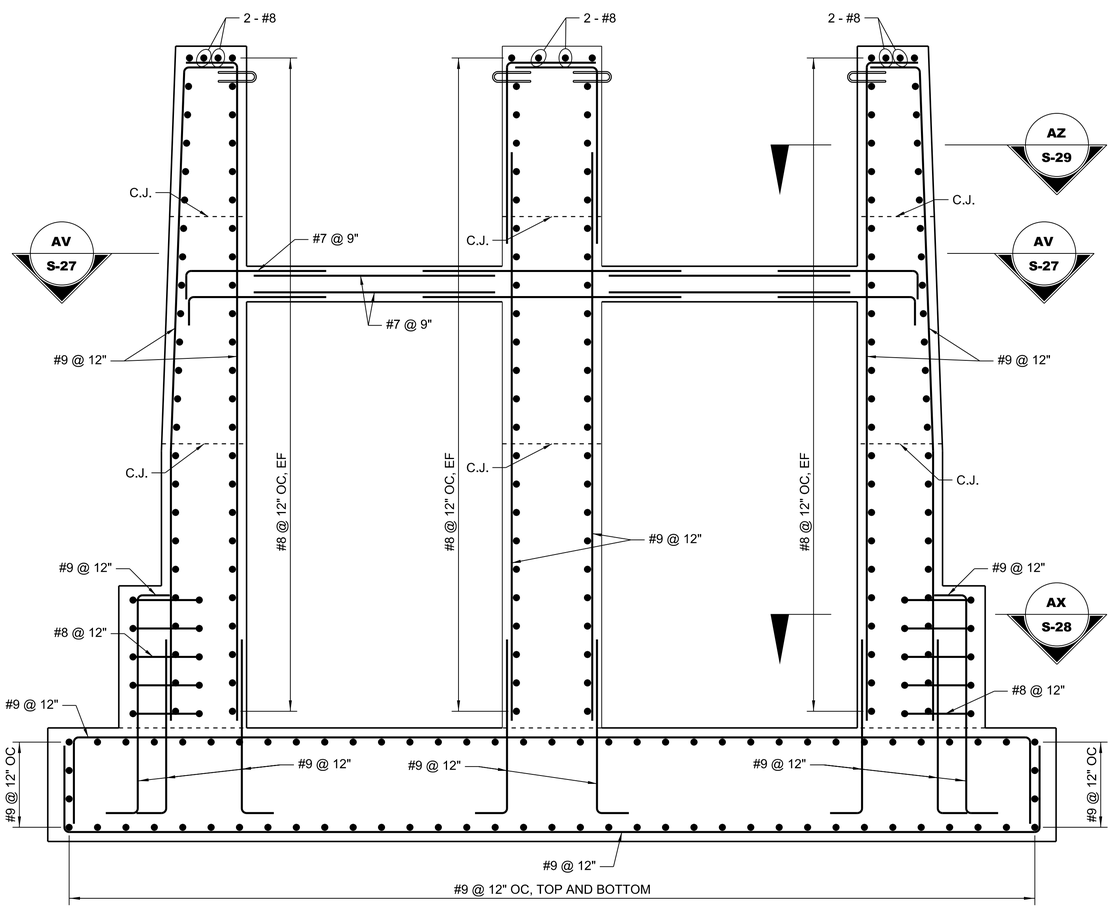

AV S-27

AZ S-29

AX S-28

M S-14 **SECTION** SCALE: A

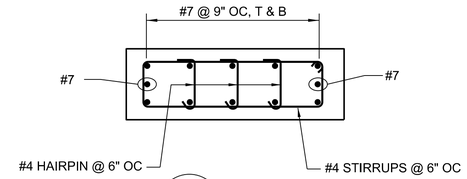

AW S-27 **SECTION** SCALE: B

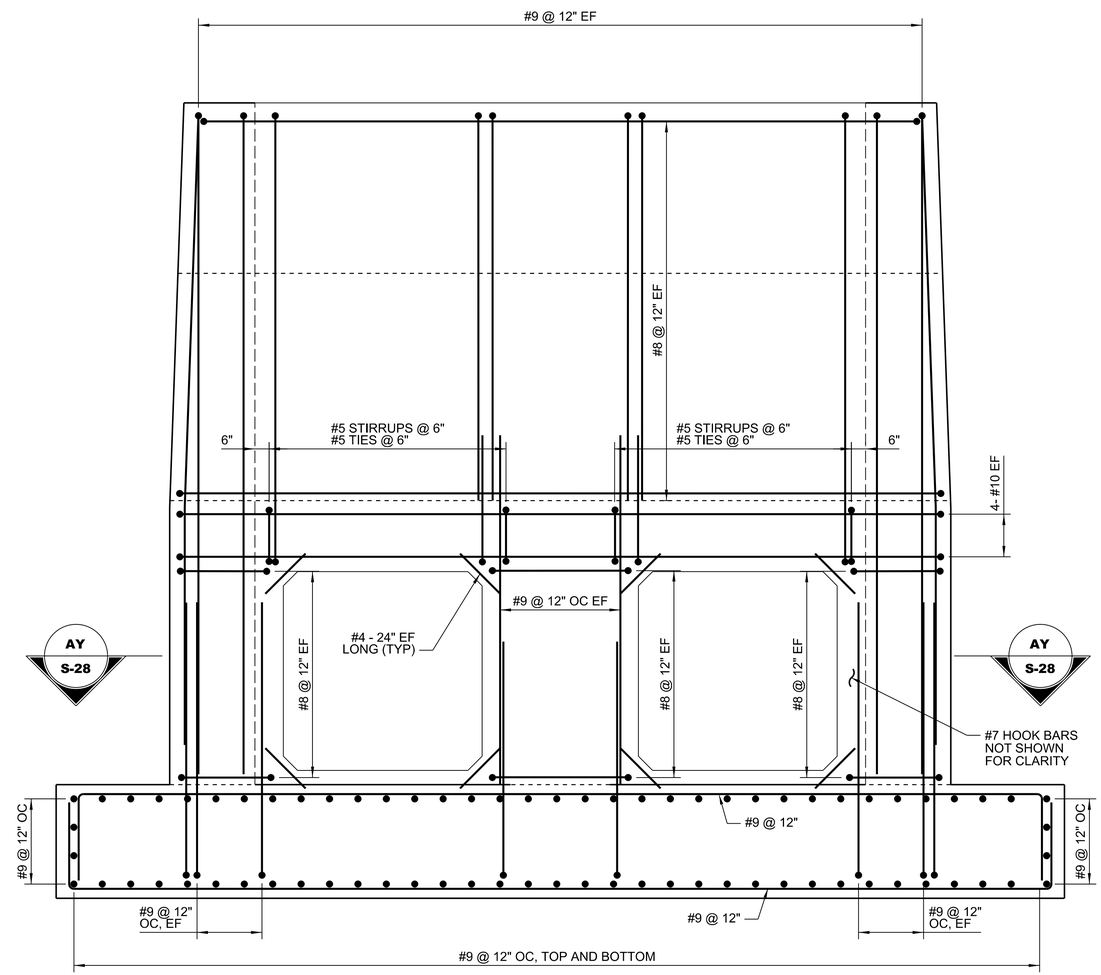

AY S-28

AY S-28

P S-14 **SECTION** SCALE: A

GRAPHIC SCALES

"A" 24" 12" 0 2' 4' 6'

"B" 12" 6" 0 1' 2' 3'

NOTES:

1. FOR REINFORCEMENT LAP SPLICE AND EMBEDMENT LENGTHS SEE TABLES ON SHEET S-01.

US Army Corps of Engineers
Jacksonville District

No.	SYM	ZONE	DESCRIPTION
N	A	A-N	ABCD...

DEPARTMENT OF THE ARMY
CORPS OF ENGINEERS
JACKSONVILLE DISTRICT
JACKSONVILLE, FLORIDA

DESIGNED BY: C.B.G.
DWN BY: W.E.S.
CKD BY: J.S.F.
SUBMITTED BY: N/A
DATE: MARCH 2015
SOLICITATION NO.: W912EP-16-R-0010
CONTRACT NO.: N/A
FILE NUMBER: N/A
PLOT SCALE: 1:1
PLOT DATE: Apr 25, 2014
FILE NAME: 114527-HHDRCRIP3-SB327.DGN

HERBERT HOOVER DIKE REHABILITATION PROJECT
STRUCTURE REPLACEMENTS

S-291 (IP-3) RECONSTRUCTION

STRUCTURAL

LANDSIDE HEADWALL REINFORCEMENT

DRAWING NO.

S-27

pw:\\COE-SAJPWP02JAX.saj.ds.usace.army.mil:SAJPW\Documents\C&SF\Herbert Hoover Dike Rehabilitation\03-Culvert Rehabilitation\S-292(IP-1), S-290(IP-2), S-291(IP-3) Culvert Reconstruction\070 - Plans\IP-3\07 Structures\S-27

SAFETY ON THIS JOB DEPENDS ON YOU

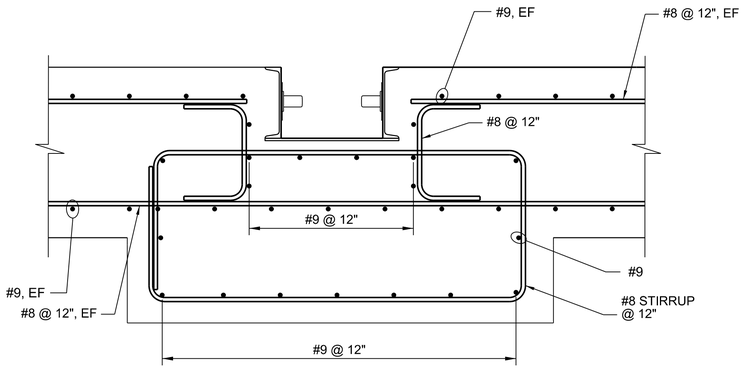

AX / S-27 SECTION
SCALE: B

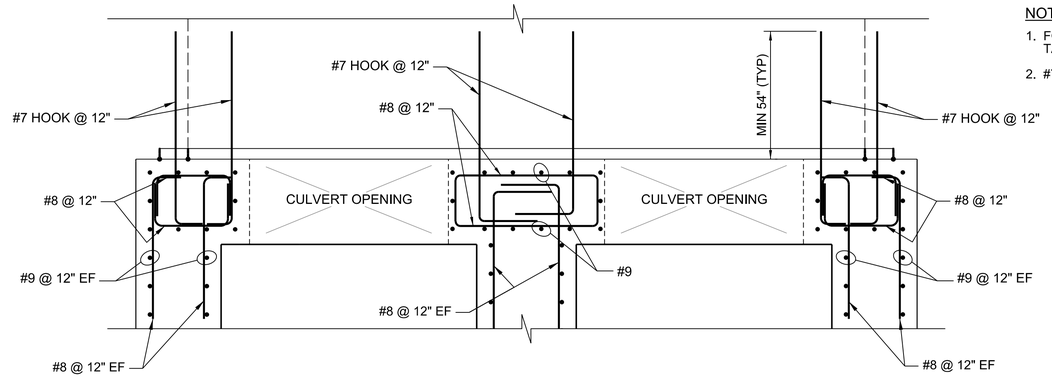

AY / S-27 SECTION
SCALE: A

NOTES:

1. FOR REINFORCEMENT LAP SPLICE AND EMBEDMENT LENGTHS SEE TABLES ON SHEET S-01.
2. #7 HOOK BARS SHALL MATCH REINFORCEMENT IN CONDUIT.

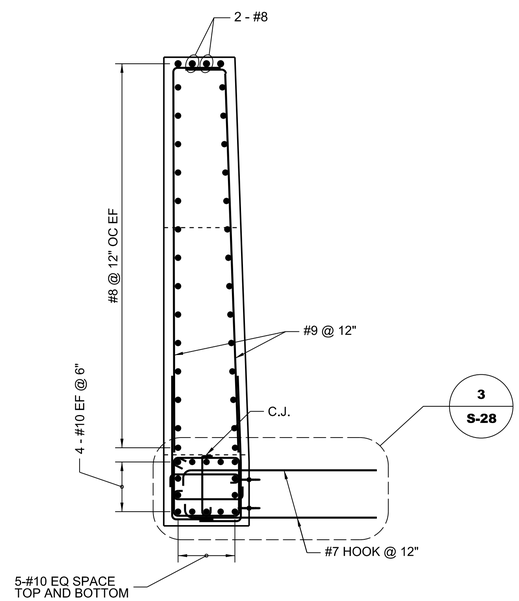

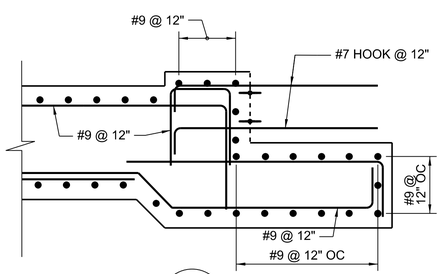

Q / S-14 SECTION
SCALE: A

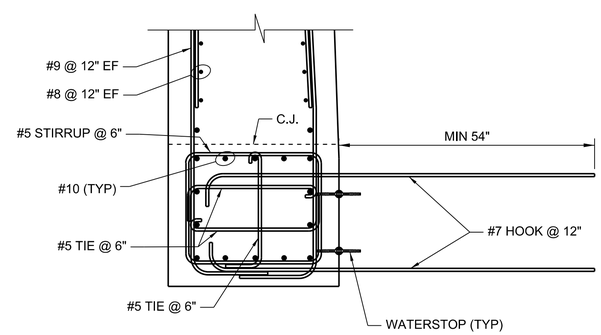

3 / S-28 DETAIL
SCALE: B

GRAPHIC SCALES

"A" 24" 12" 0 2' 4' 6'

"B" 12" 6" 0 1' 2' 3'

US Army Corps of Engineers
Jacksonville District

No.	STM	ZONE	DESCRIPTION
N	A-N	ABCD...	

DEPARTMENT OF THE ARMY
CORPS OF ENGINEERS
JACKSONVILLE DISTRICT
JACKSONVILLE, FLORIDA

DESIGNED BY: C.B.G.	DATE: MARCH 2015
DWN BY: W.E.S.	CKD BY: G.J.L.
SOLICITATION NO.: W912EP-16-R-0010	
SUBMITTED BY: N/A	CONTRACT NO.: N/A
PLOT SCALE: As shown	PLOT DATE: Apr 25, 2016
FILE NUMBER: N/A	
FILE NAME: 114527-HHDRCRIP3-SB328.DGN	

HERBERT HOOVER DIKE REHABILITATION PROJECT
STRUCTURE REPLACEMENTS

S-291 (IP-3) RECONSTRUCTION

STRUCTURAL

LANDSIDE HEADWALL REINFORCEMENT

DRAWING NO.

S-28

pw:\\COE-SAJPWP02JAX.saj.ds.usace.army.mil:SAJPW\Documents\C&SF\Herbert Hoover Dike Rehabilitation\03-Culvert Rehabilitation\S-292(IP-1), S-290(IP-2), S-291(IP-3) Culvert Reconstruction\070 - Plans\IP-3\07 Structures\S-28

SAFETY ON THIS JOB DEPENDS ON YOU

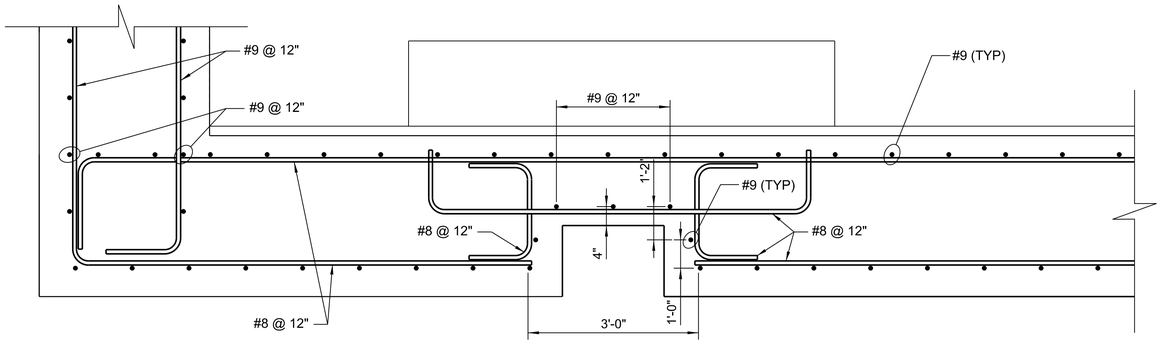

AZ S-27 **SECTION** SCALE: B

NOTES:

1. FOR REINFORCEMENT LAP SPLICE AND EMBEDMENT LENGTHS SEE TABLES ON SHEET S-01.
2. FOUNDATION REINFORCEMENT PENETRATES SCOUR CUT OFF WALL. SEE SPECIFICATION 31 41 16 FOR METHODOLOGY TO CUT HOLES IN SHEET PILING.
3. #7 HOOK BARS SHALL MATCH REINFORCEMENT IN CONDUIT.

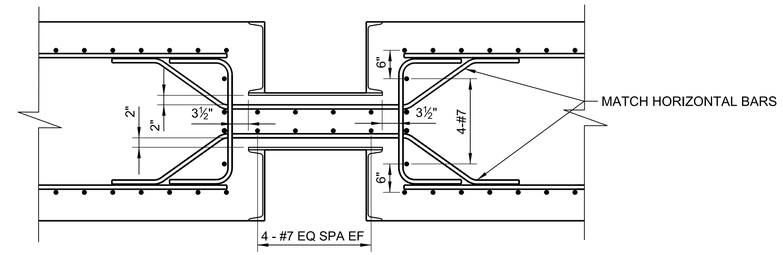

BA S-29 **SECTION** SCALE: A

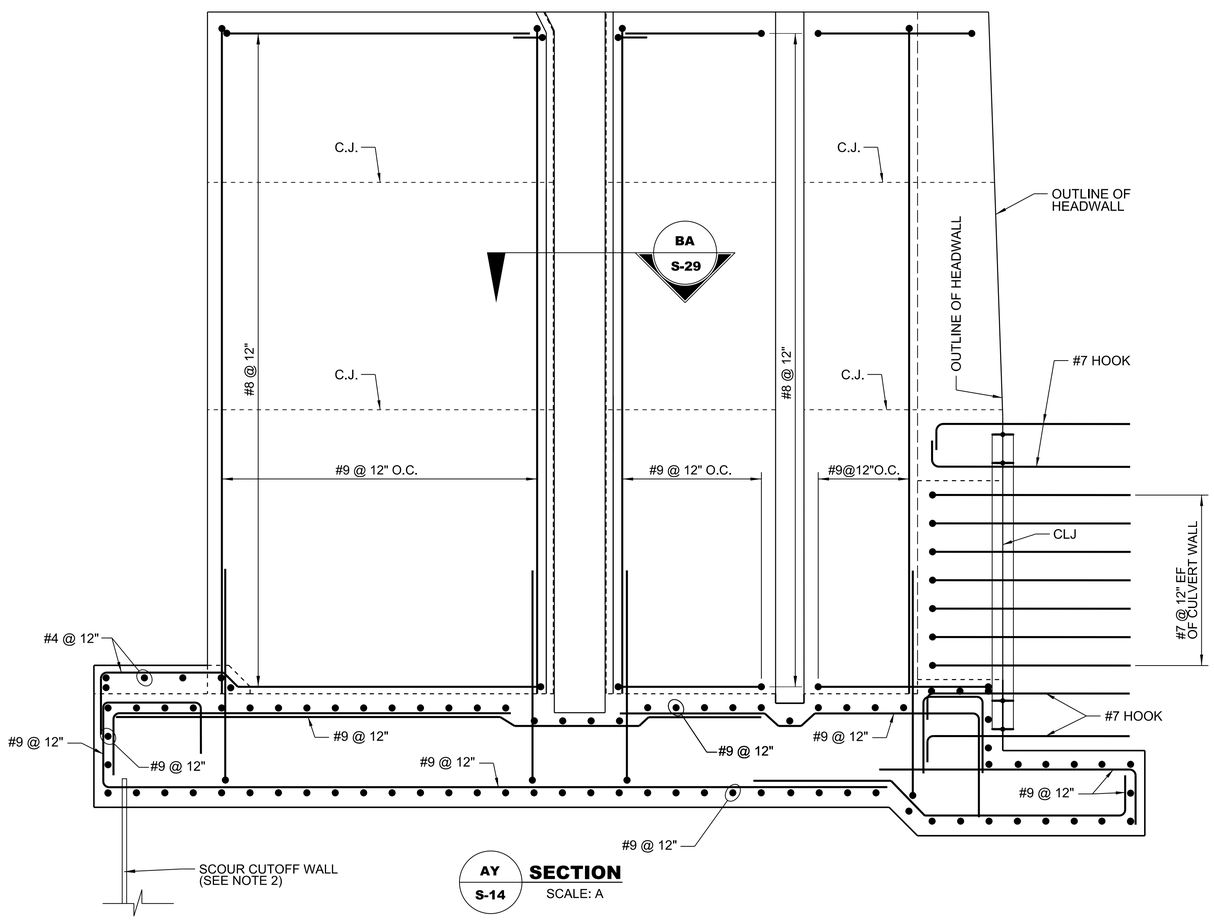

AY S-14 **SECTION** SCALE: A

NOTE: HEADWALL REINFORCEMENT NOT SHOWN FOR CLARITY

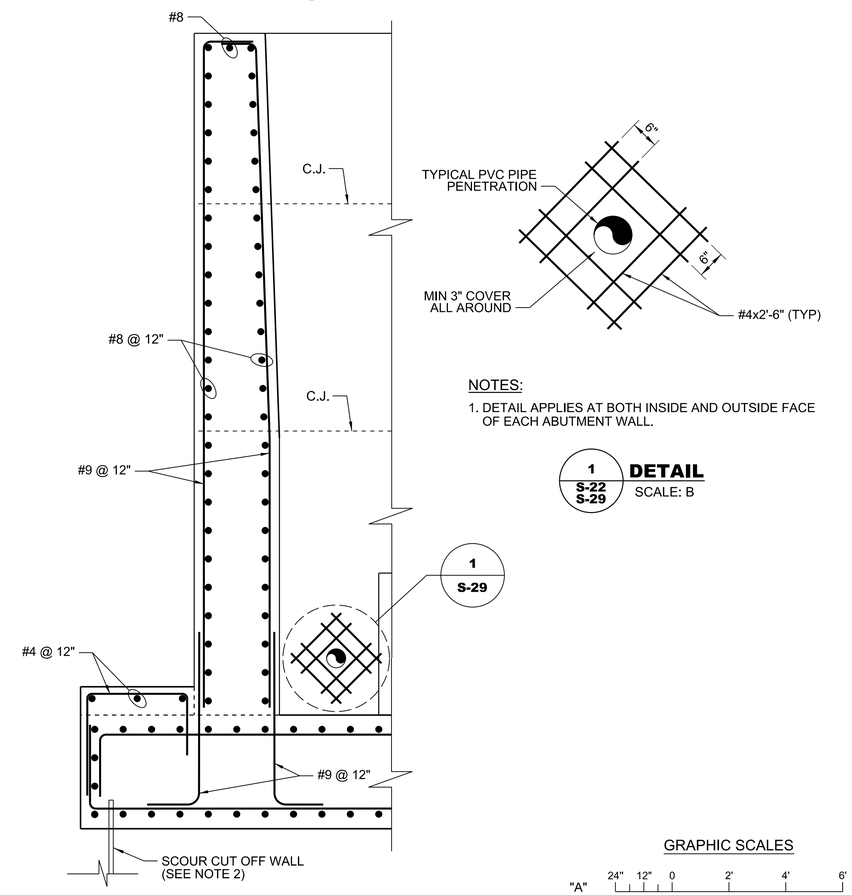

NOTES:

1. DETAIL APPLIES AT BOTH INSIDE AND OUTSIDE FACE OF EACH ABUTMENT WALL.

1 S-22 S-29 **DETAIL** SCALE: B

AX S-14 **SECTION** SCALE: A

GRAPHIC SCALES

"A" 24" 12" 0 2' 4' 6'

"B" 12" 6" 0 1' 2' 3'

US Army Corps of Engineers, Jacksonville District

No.	SYM	ZONE	DESCRIPTION
N	A	A-N	ABCD...

DEPARTMENT OF THE ARMY
CORPS OF ENGINEERS
JACKSONVILLE DISTRICT
JACKSONVILLE, FLORIDA

DESIGNED BY: C.B.G.
DWN BY: W.E.S.
CKD BY: J.S.F.
SUBMITTED BY: N/A
DATE: MARCH 2015
SOLICITATION NO.: W912EP-16-R-0010
CONTRACT NO.: N/A
PLOT SCALE: N/A
PLOT DATE: Apr 25, 2014
FILE NUMBER: N/A
LEGEND NO.:
FILE NAME: 114527-HHDRCRIP3-SB329.DGN

HERBERT HOOVER DIKE REHABILITATION PROJECT
STRUCTURE REPLACEMENTS

S-291 (IP-3) RECONSTRUCTION

STRUCTURAL

LANDSIDE HEADWALL REINFORCEMENT

DRAWING NO.

S-29

pw:\\COE-SAJPWP02JAX.saj.ds.usace.army.mil:SAJPW\Documents\C&SF\Herbert Hoover Dike Rehabilitation\03-Culvert Rehabilitation\S-292(IP-1), S-290(IP-2), S-291(IP-3) Culvert Reconstruction\070 - Plans\IP-3\07 Structures\S-29

SAFETY ON THIS JOB DEPENDS ON YOU

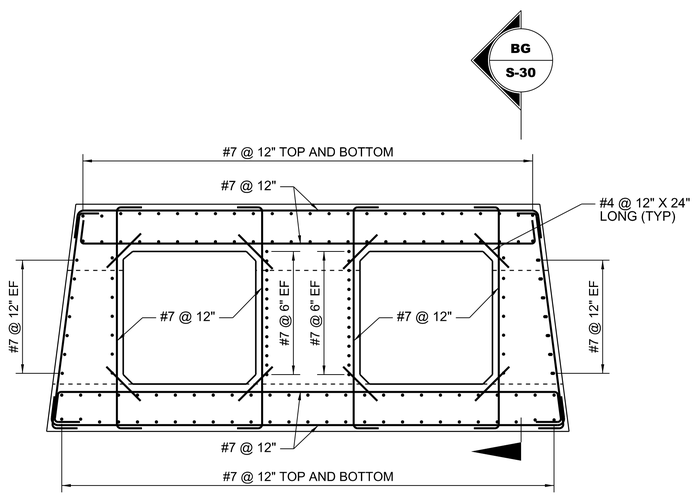

AP S-18 **SECTION**
SCALE: A

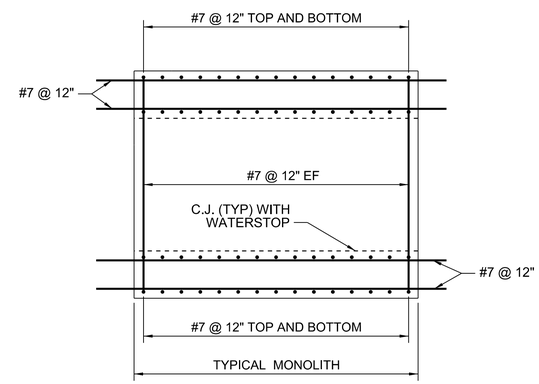

BG S-30 **SECTION**
SCALE: A

GRAPHIC SCALE
"A" 24" 12" 0 2' 4' 6' 8' 10'

US Army Corps of Engineers
Jacksonville District

No.	SYM	ZONE	DESCRIPTION
N	A-N	ABCD...	

DEPARTMENT OF THE ARMY
CORPS OF ENGINEERS
JACKSONVILLE DISTRICT
JACKSONVILLE, FLORIDA

DESIGNED BY: C.B.G.
DATE: MARCH 2015
DWN BY: W.E.S.
CKD BY: J.S.F.
SOLICITATION NO.: W912EP-16-R-0010
SUBMITTED BY: N/A
CONTRACT NO.: N/A
PLOT SCALE: N/A
PLOT DATE: Apr 25, 2016
FILE NUMBER: N/A
FILE NAME: 114527-HHDRCRIP3-SB130.DGN

HERBERT HOOVER DIKE REHABILITATION PROJECT
STRUCTURE REPLACEMENTS

S-291 (IP-3) RECONSTRUCTION

STRUCTURAL
OUTLET CONDUIT
CULVERT REINFORCEMENT

DRAWING NO.
S-30

pw:\\COE-SAJPWP02.JAX.saj.ds.usace.army.mil:SAJPW\Documents\C&SF\Herbert Hoover Dike Rehabilitation\03-Culvert Rehabilitation\S-292(IP-1), S-290(IP-2), S-291(IP-3) Culvert Reconstruction\070 - Plans\IP-3\07 Structures\S-30

SAFETY ON THIS JOB DEPENDS ON YOU

NOTES:

1. FOUNDATION REINFORCEMENT PENETRATES SCOUR CUT-OFF WALL. SEE SPECIFICATION 31 41 16 FOR METHODOLOGY TO CUT HOLES IN SHEET PILING.

2. SCOUR CUTOFF WALL SHALL EXTEND PAST STRUCTURE AT A MINIMUM OF 1'-0".

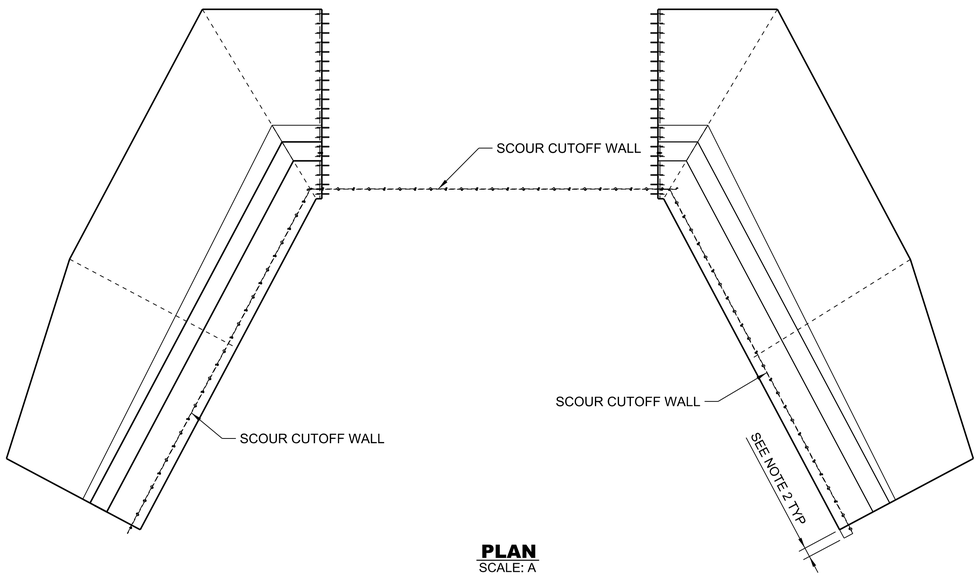

PLAN
SCALE: A

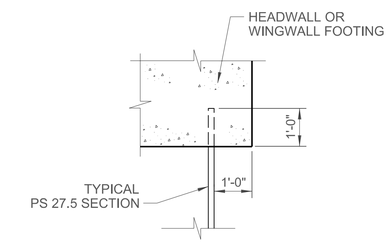

TYPICAL PS 27.5 SHEETPILE EMBEDMENT DETAIL
SCALE: N.T.S.

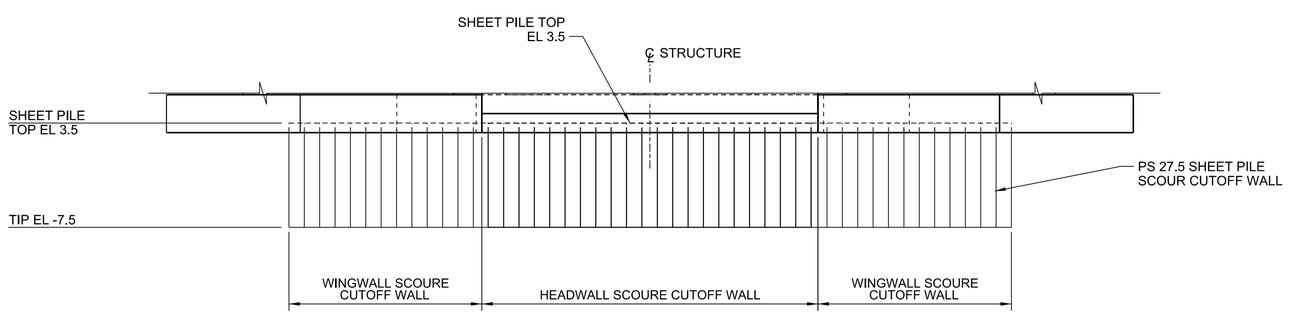

BH / S-31 **ELEVATION**
SCALE: A

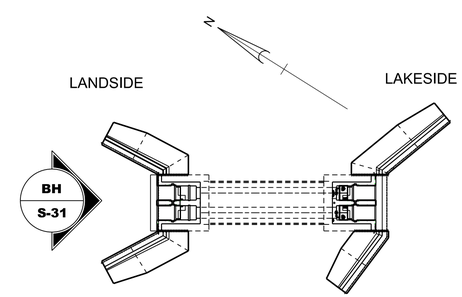

KEY PLAN
SCALE: N.T.S.

GRAPHIC SCALE

"A" 48" 24" 0 4' 8' 12' 16' 20'

US Army Corps of Engineers
Jacksonville District

No.	SYM	ZONE	DESCRIPTION
N	A	A-N	ABCD...

DEPARTMENT OF THE ARMY
CORPS OF ENGINEERS
JACKSONVILLE DISTRICT
JACKSONVILLE, FLORIDA

DESIGNED BY: C.B.G. | DATE: MARCH 2015
DWN BY: W.E.S. | CKD BY: J.S.F. | SOLICITATION NO.: W912EP-16-R-0010
SUBMITTED BY: N/A | CONTRACT NO.: N/A
PLOT SCALE: AS SHOWN | PLOT DATE: Apr 25, 2014 | FILE NUMBER: N/A
FILE NAME: 114527-HHDRCRIP3-SB231.DGN

HERBERT HOOVER DIKE REHABILITATION PROJECT
STRUCTURE REPLACEMENTS

S-291 (IP-3) RECONSTRUCTION

STRUCTURAL
LANDSIDE HEADWALLS
SCOUR CUTOFF WALLS

DRAWING NO.
S-31

pw:\\COE-SAJ\PWP02\JAX.saj.ds.usace.army.mil:SAJPW\Documents\C&SF\Herbert Hoover Dike Rehabilitation\03-Culvert Rehabilitation\S-292(IP-1), S-290(IP-2), S-291(IP-3) Culvert Reconstruction\070 - Plans\IP-3\07 Structures\S-31

SAFETY ON THIS JOB DEPENDS ON YOU

NOTES:

1. FOUNDATION REINFORCEMENT PENETRATES SCOUR CUT-OFF WALL. SEE SPECIFICATION 31 41 16 FOR METHODOLOGY TO CUT HOLES IN SHEET PILING.

2. SCOUR CUTOFF WALL SHALL EXTEND PAST STRUCTURE AT A MINIMUM OF 1'-0".

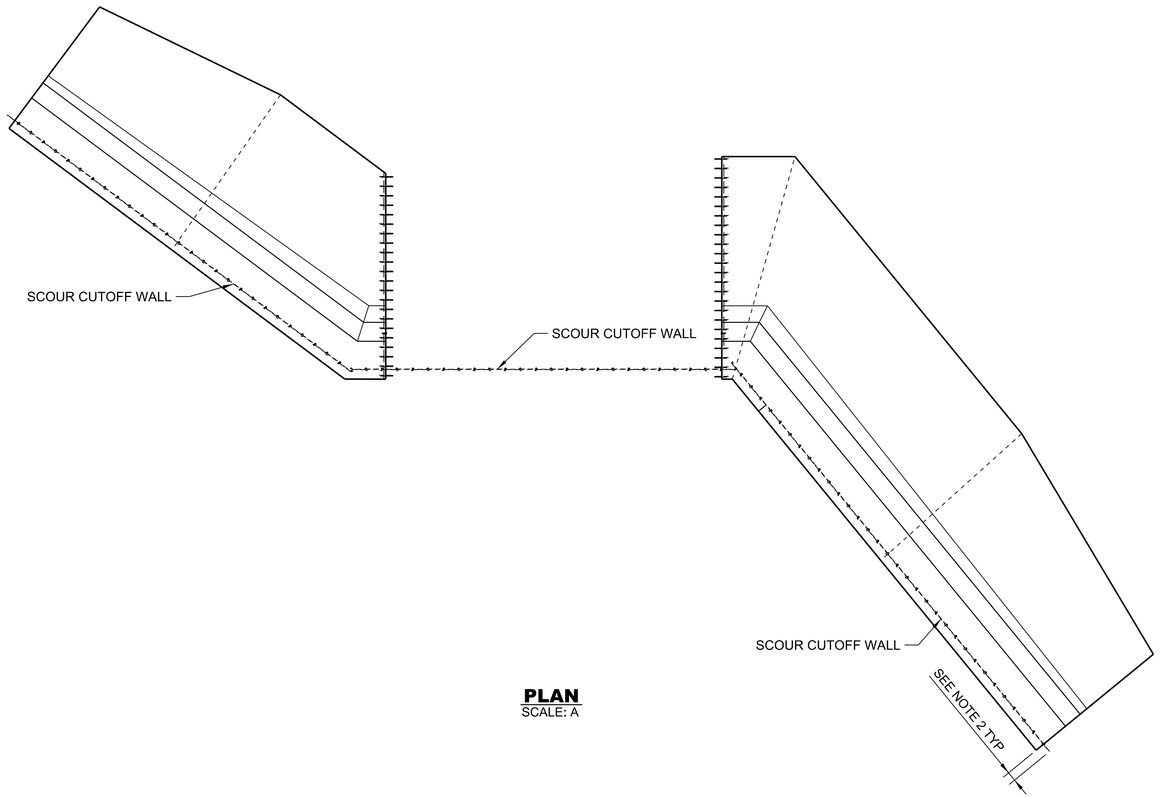

PLAN
SCALE: A

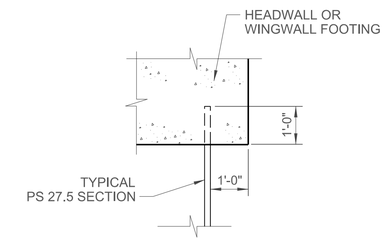

TYPICAL PS 27.5 SHEETPILE EMBEDMENT DETAIL
SCALE: N.T.S.

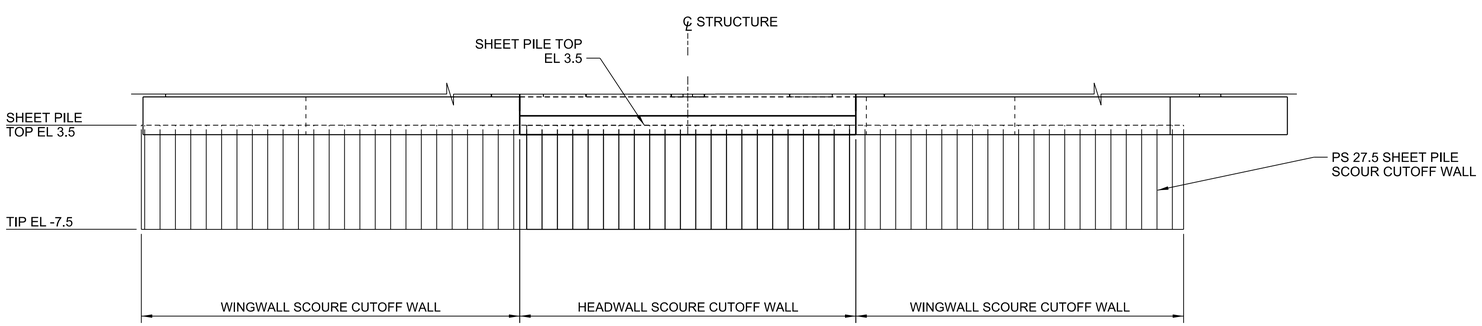

BJ / S-31 **ELEVATION**
SCALE: A

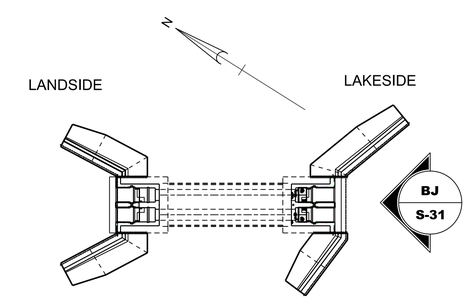

KEY PLAN
SCALE: N.T.S.

GRAPHIC SCALE
"A" 48" 24" 0 4' 8' 12' 16' 20'

US Army Corps of Engineers
Jacksonville District

No.	SYM	ZONE	DESCRIPTION
N	A	A-N	ABCD...

DEPARTMENT OF THE ARMY
CORPS OF ENGINEERS
JACKSONVILLE DISTRICT
JACKSONVILLE, FLORIDA

DESIGNED BY: C.B.G.
DATE: MARCH 2015
DWN BY: W.E.S.
CKD BY: J.S.F.
SOLICITATION NO.: W912EP-16-R-0010
SUBMITTED BY: N/A
CONTRACT NO.: N/A
PLOT SCALE: AS SHOWN
PLOT DATE: Apr 25, 2016
FILE NUMBER: N/A
FILE NAME: 114527-HHDRCRIP3-SB231A.DGN

HERBERT HOOVER DIKE REHABILITATION PROJECT
STRUCTURE REPLACEMENTS

S-291 (IP-3) RECONSTRUCTION
STRUCTURAL
LAKESIDE HEADWALLS
SCOUR CUTOFF WALLS

DRAWING NO.
S-31A

pw:\\COE-SAJPWP02\JAX.saj.ds.usace.army.mil:SAJPW\Documents\C&SF\Herbert Hoover Dike Rehabilitation\03-Culvert Reconstruction\070 - Plans\IP-3\07 Structures\S-31A
S-292(IP-1), S-290(IP-2), S-291(IP-3) Culvert Reconstruction

SAFETY ON THIS JOB DEPENDS ON YOU

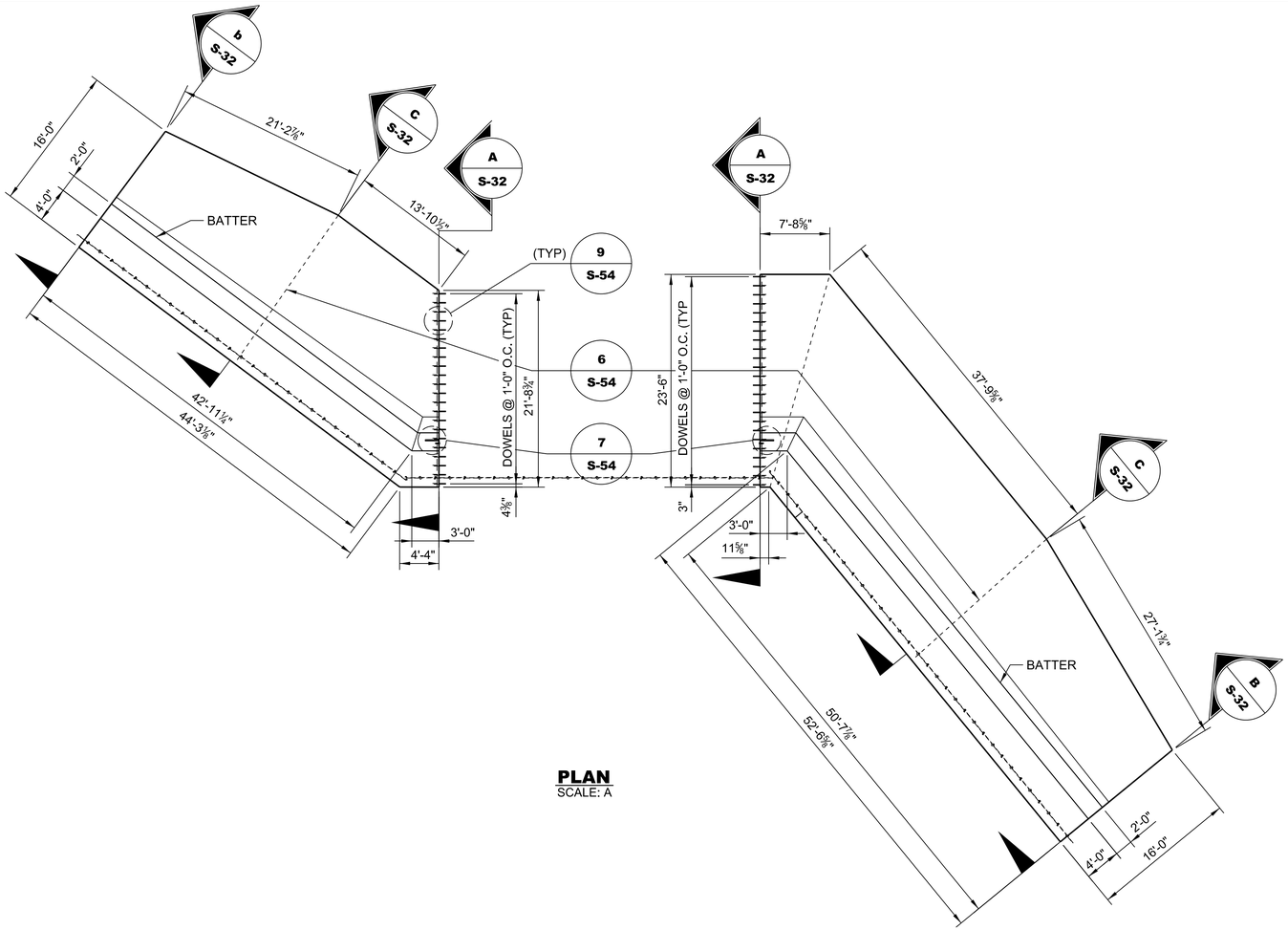

PLAN
SCALE: A

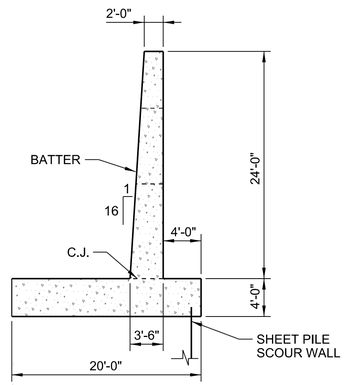

A / **S-32** **SECTION**
SCALE: A

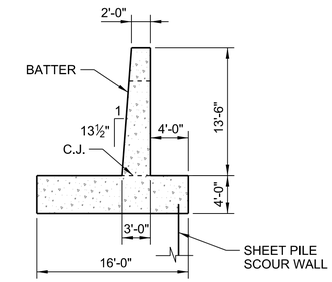

B / **S-32** **SECTION**
SCALE: A

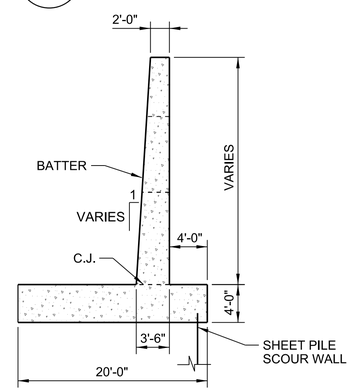

C / **S-32** **SECTION**
SCALE: A

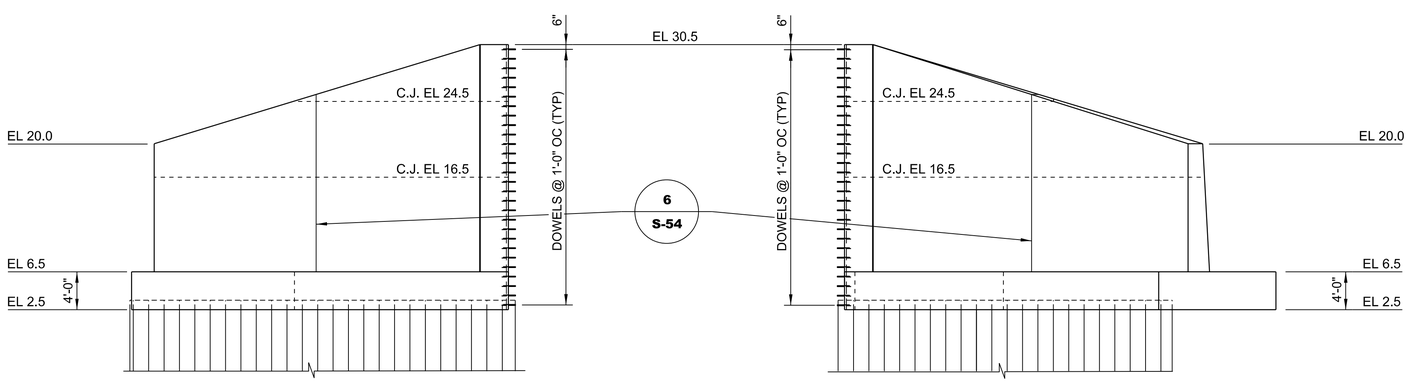

ELEVATION
SCALE: A

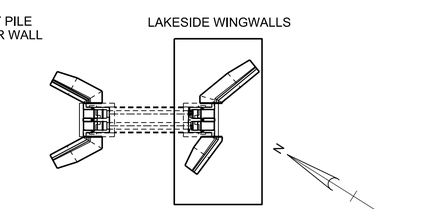

KEY PLAN
SCALE: N.T.S.

GRAPHIC SCALE
"A" 48" 24" 0 4' 8' 12' 16' 20'

US Army Corps of Engineers
Jacksonville District

No.	SYM	ZONE	DESCRIPTION
N	A	A-N	ABCD...

DEPARTMENT OF THE ARMY
CORPS OF ENGINEERS
JACKSONVILLE DISTRICT
JACKSONVILLE, FLORIDA

DESIGNED BY: C.B.G.	DATE: MARCH 2015
DWN BY: W.E.S.	CKD BY: J.S.F.
SOLICITATION NO.: W912EP-16-R-0010	
SUBMITTED BY: N/A	CONTRACT NO.: N/A
PLOT SCALE: As Shown	PLOT DATE: Apr 25, 2016
FILE NUMBER: N/A	
FILE NAME: 114527-HHDRCRIP3-SB132.DGN	

HERBERT HOOVER DIKE REHABILITATION PROJECT
STRUCTURE REPLACEMENTS

S-291 (IP-3) RECONSTRUCTION
STRUCTURAL
LAKESIDE WINGWALL

DRAWING NO.
S-32

pw:\\COE-SAJPWP02JAX.saj.ds.usace.army.mil:SAJPW\Documents\C&SF\Herbert Hoover Dike Rehabilitation\03-Culvert Reconstruction\070 - Plans\IP-3\07 Structures\S-32

SAFETY ON THIS JOB DEPENDS ON YOU

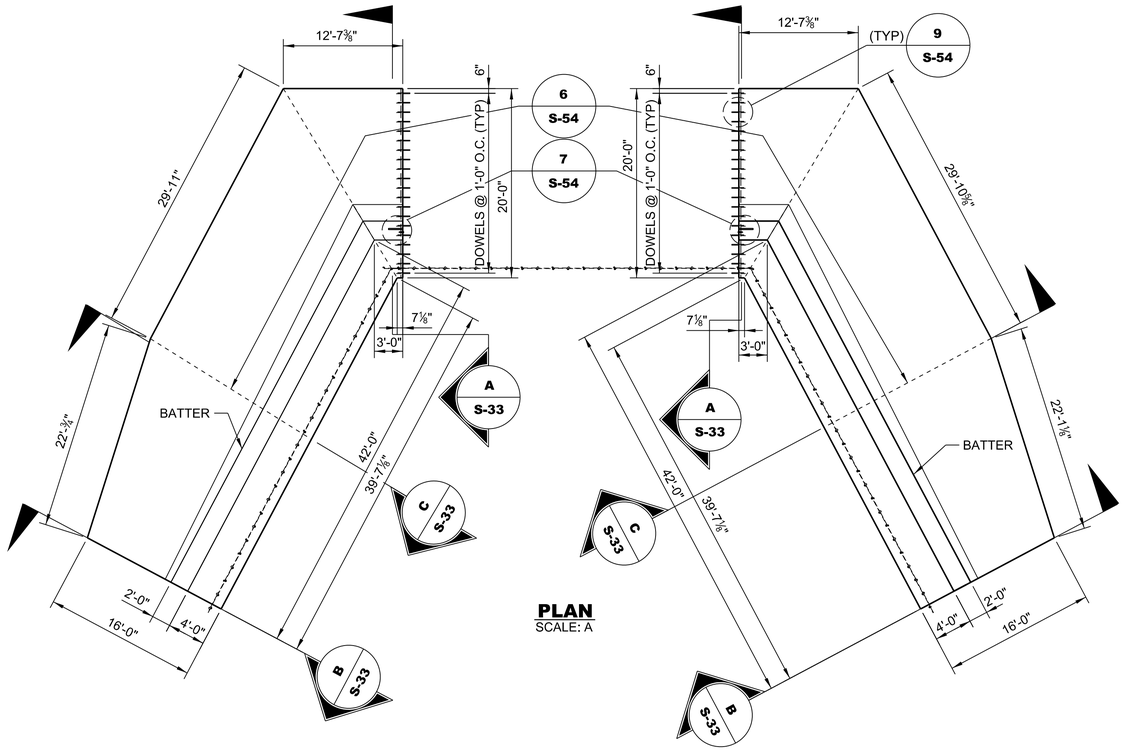

PLAN
SCALE: A

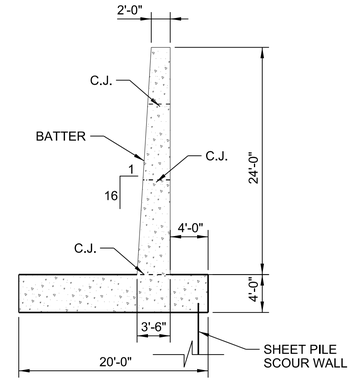

A S-33 SECTION
SCALE: A

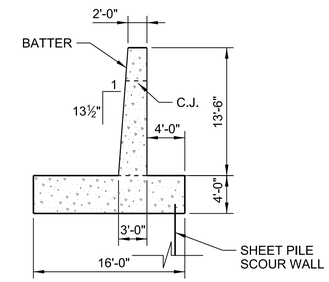

B S-33 SECTION
SCALE: A

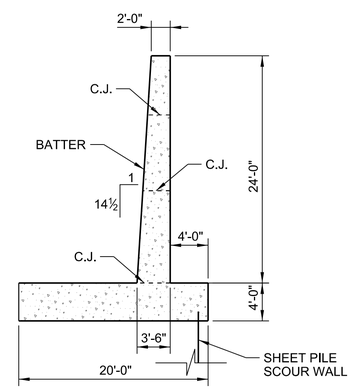

C S-33 SECTION
SCALE: A

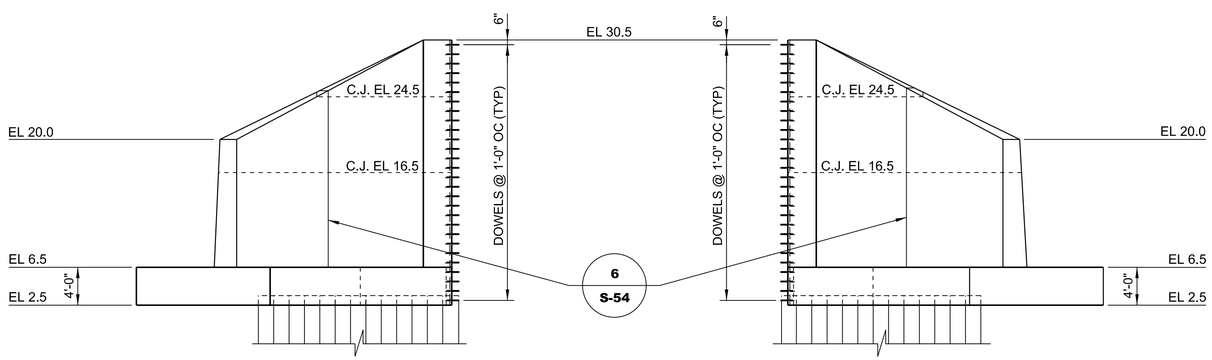

ELEVATION
SCALE: A

LANDSIDE WINGWALLS

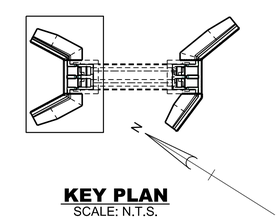

KEY PLAN
SCALE: N.T.S.

GRAPHIC SCALE
"A" 48" 24" 0 4' 8' 12' 16' 20'

US Army Corps of Engineers
Jacksonville District

No.	SYM	ZONE	DESCRIPTION
N	A-N	ABCD...	

DEPARTMENT OF THE ARMY
CORPS OF ENGINEERS
JACKSONVILLE DISTRICT
JACKSONVILLE, FLORIDA

DESIGNED BY: C.B.G.	DATE: MARCH 2015
DWN BY: W.E.S.	CKD BY: J.S.F.
SOLICITATION NO.: W912EP-16-R-0010	
SUBMITTED BY: N/A	CONTRACT NO.: N/A
PLOT SCALE: AS SHOWN	PLOT DATE: Apr 25, 2016
FILE NUMBER: N/A	
FILE NAME: 114527-HHDRCRIP3-SB133.DGN	

HERBERT HOOVER DIKE REHABILITATION PROJECT
STRUCTURE REPLACEMENTS

S-291 (IP-3) RECONSTRUCTION

STRUCTURAL

LANDSIDE WINGWALL

DRAWING NO.
S-33

pw:\\COE-SAJPW02JAX.saj.ds.usace.army.mil:SAJPW\Documents\C&SF\Herbert Hoover Dike Rehabilitation\03-Culvert Reconstruction\070 - Plans\IP-3\07 Structures\S-33

S-292(IP-1), S-290(IP-2), S-291(IP-3) Culvert Reconstruction

SAFETY ON THIS JOB DEPENDS ON YOU

NOTES:

1. FOR REINFORCEMENT LAP SPLICE AND EMBEDMENT LENGTHS SEE TABLES ON SHEET S-01.
2. FOUNDATION REINFORCEMENT PENETRATES SCOUR CUT OFF WALL. SEE SPECIFICATION 31 41 16 FOR METHODOLOGY TO CUT HOLES IN SHEET PILING.

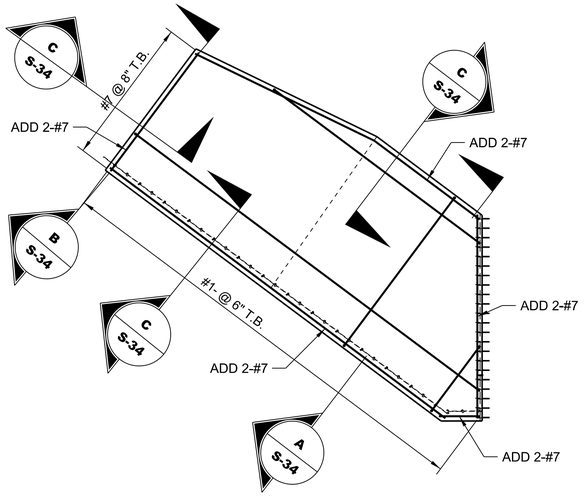

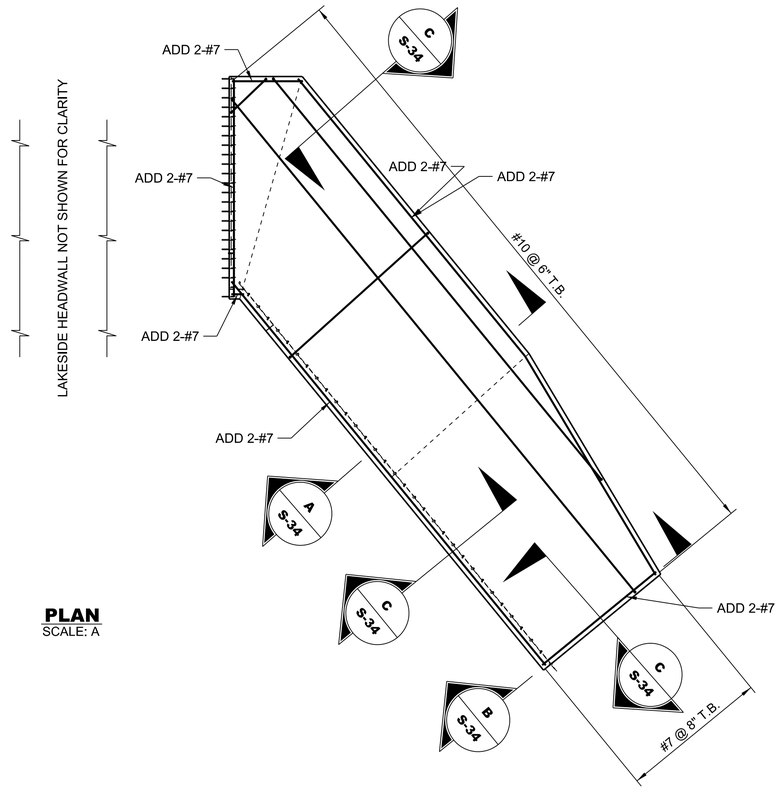

PLAN
SCALE: A

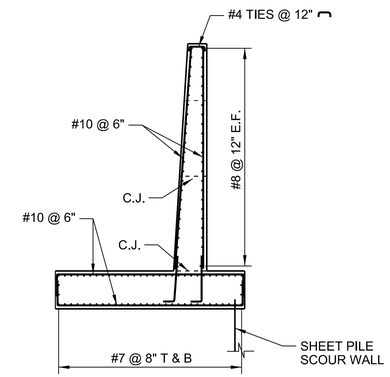

SECTION A / S-34
SCALE: A

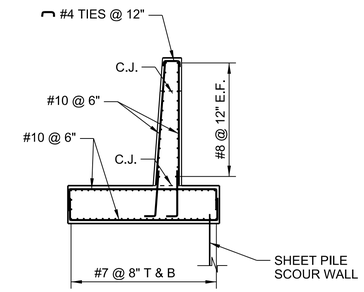

SECTION B / S-34
SCALE: A

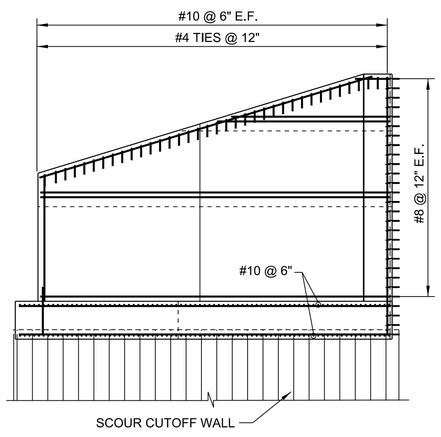

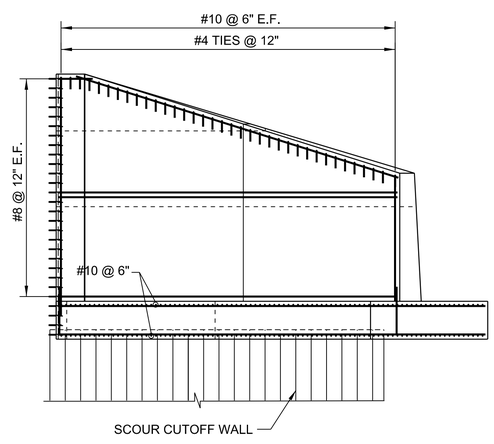

ELEVATION
SCALE: A

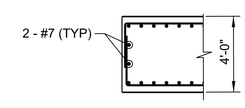

C / S-34 **SECTION**
SCALE: B

GRAPHIC SCALE
"A" 48" 24" 0 4' 8' 12' 16' 20'

US Army Corps of Engineers
Jacksonville District

No.	SYM	ZONE	DESCRIPTION
N	A	A-N	ABCD...

DEPARTMENT OF THE ARMY
CORPS OF ENGINEERS
JACKSONVILLE DISTRICT
JACKSONVILLE, FLORIDA

DESIGNED BY: C.B.G.
DWN BY: W.E.S.
CKD BY: J.S.F.
SUBMITTED BY: N/A
SOLICITATION NO.: W912EP-16-R-0010
CONTRACT NO.: N/A
DATE: MARCH 2015
PLOT SCALE: As shown
PLOT DATE: Apr 25, 2014
FILE NUMBER: N/A
FILE NAME: 114527-HHDRCRIP3-SB134.DGN

HERBERT HOOVER DIKE REHABILITATION PROJECT
STRUCTURE REPLACEMENTS

S-291 (IP-3) RECONSTRUCTION

STRUCTURAL

LAKESIDE WINGWALL REINFORCEMENT

DRAWING NO.
S-34

pw:\\COE-SAJPW02\JAX.saj.ds.usace.army.mil:SAJPW\Documents\C&SF\Herbert Hoover Dike Rehabilitation\03-Culvert Rehabilitation\S-292(IP-1), S-290(IP-2), S-291(IP-3) Culvert Reconstruction\070 - Plans\IP-3\07 Structures\S-34

SAFETY ON THIS JOB DEPENDS ON YOU

NOTES:

1. FOR REINFORCEMENT LAP SPLICE AND EMBEDMENT LENGTHS SEE TABLES ON SHEET S-01.
2. FOUNDATION REINFORCEMENT PENETRATES SCOUR CUT OFF WALL. SEE SPECIFICATION 31 41 16 FOR METHODOLOGY TO CUT HOLES IN SHEET PILE.

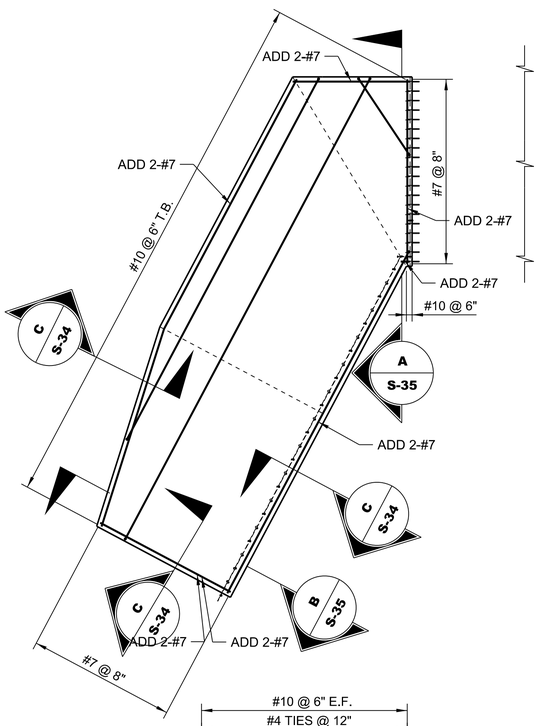

PLAN
SCALE: A

LANDSIDE HEADWALL NOT SHOWN FOR CLARITY

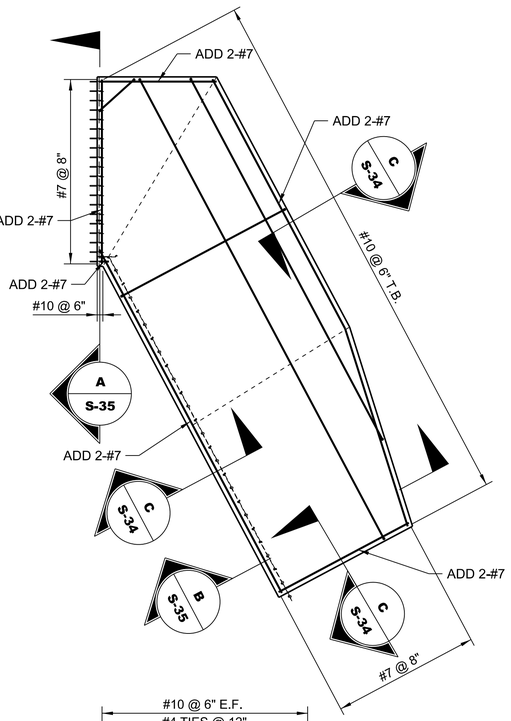

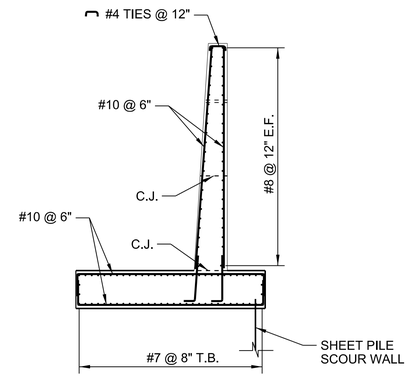

SECTION A / S-33
SCALE: A

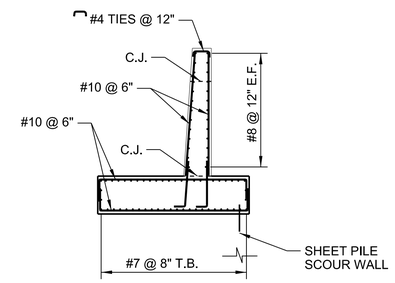

SECTION B / S-33
SCALE: A

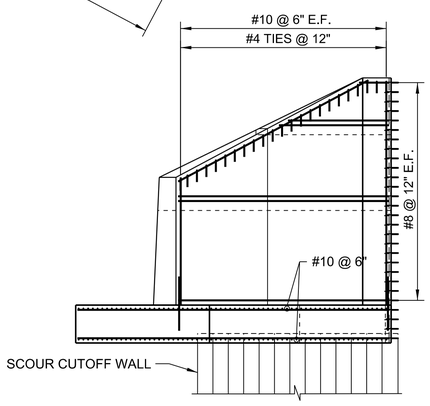

LANDSIDE HEADWALL NOT SHOWN FOR CLARITY

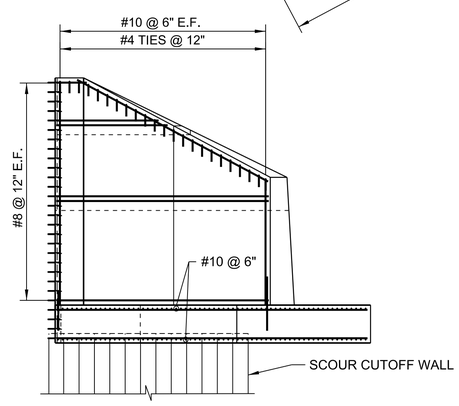

LANDSIDE HEADWALL NOT SHOWN FOR CLARITY

ELEVATION
SCALE: A

GRAPHIC SCALE

"A" 48" 24" 0 4' 8' 12' 16' 20'

US Army Corps of Engineers
Jacksonville District

No.	SYM	ZONE	DESCRIPTION
N	A-N	ABCD...	

DEPARTMENT OF THE ARMY
CORPS OF ENGINEERS
JACKSONVILLE DISTRICT
JACKSONVILLE, FLORIDA

DESIGNED BY: C.B.G.	DATE: MARCH 2015
DWN BY: W.E.S. / CKD BY: J.S.F.	SOLICITATION NO.: W912EP-16-R-0010
SUBMITTED BY: N/A	CONTRACT NO.: N/A
PLOT SCALE: AS SHOWN / PLOT DATE: Apr 25, 2016	FILE NUMBER: N/A
FILE NAME: 114527-HHDRCRIP3-SB135.DGN	

HERBERT HOOVER DIKE REHABILITATION PROJECT
STRUCTURE REPLACEMENTS

S-291 (IP-3) RECONSTRUCTION

STRUCTURAL

LANDSIDE WINGWALL REINFORCEMENT

DRAWING NO.

S-35

pw:\\COE-SAJPW\P02JAX.saj.ds.usace.army.mil:SAJPW\Documents\C&SF\Herbert Hoover Dike Rehabilitation\03-Culvert Rehabilitation\070 - Plans\IP-3\07 Structures\S-35

SAFETY ON THIS JOB DEPENDS ON YOU

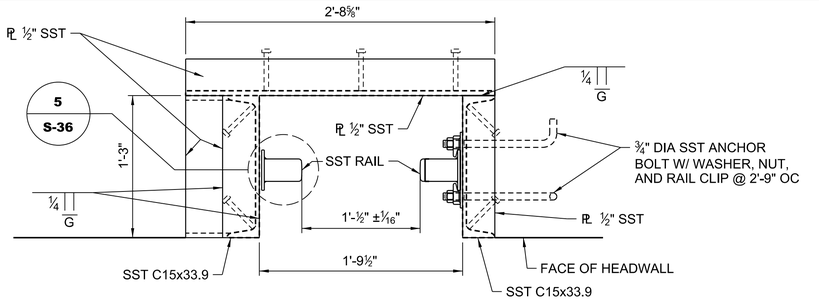

1 S-36 PLAN - BULKHEAD SLOT

SCALE: NTS

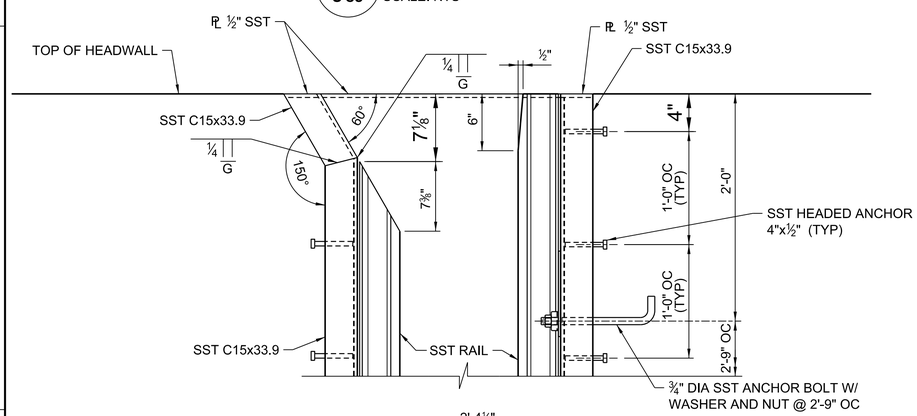

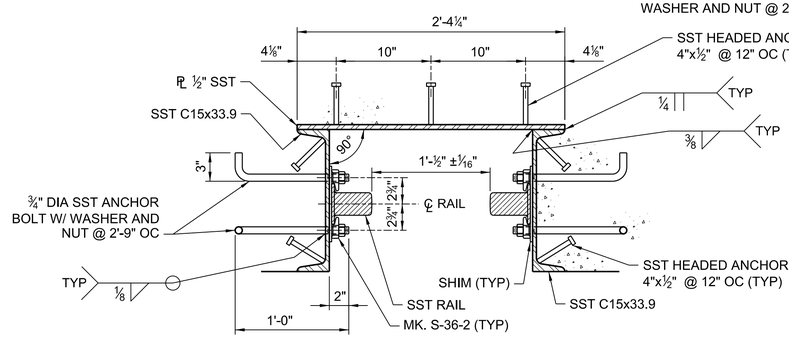

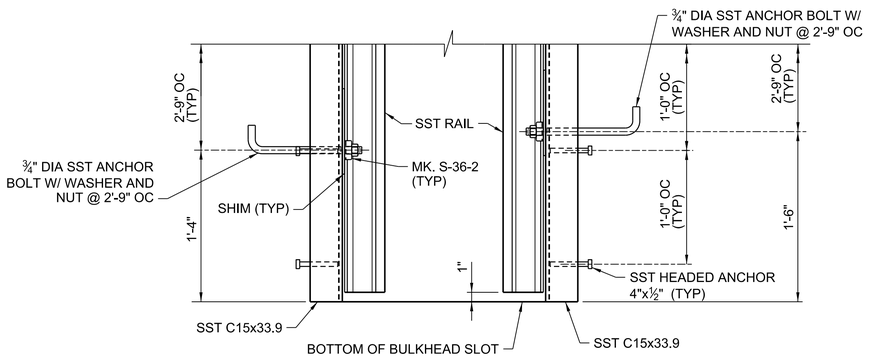

2 S-36 DETAIL

SCALE: A

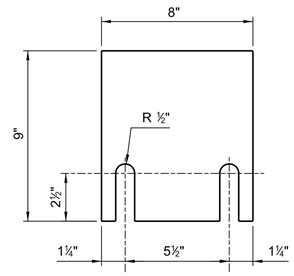

MAT'L: STAINLESS STEEL

CONTRACTOR SHALL PROVIDE 3-⅛" SHIMS AND 2-1/16" SHIMS FOR EACH PAIR OF ANCHOR BOLTS.

SHIM DETAIL

SCALE: N.T.S.

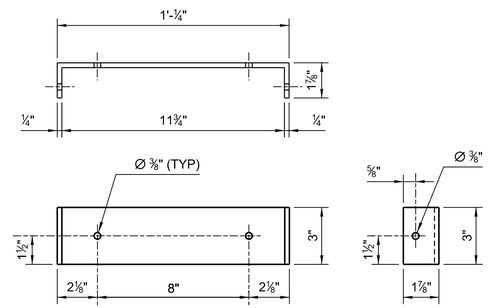

BRACKET MK. S-36-1

MATL: ¼" SST TYPE 316L

LAKESIDE 4 REQ'D
LANDSIDE 4 REQ'D

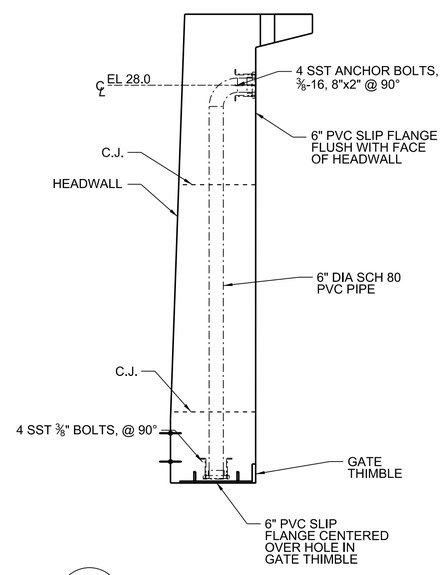

4 S-36 CULVERT VENT PIPE DETAIL

SCALE: NTS

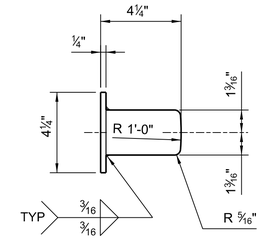

5 S-36 RAIL PROFILE DETAIL

SCALE: NTS

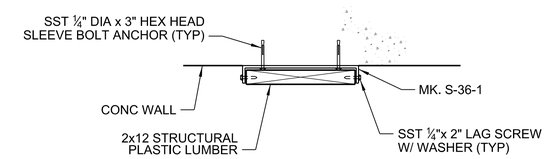

BT S-36 SECTION

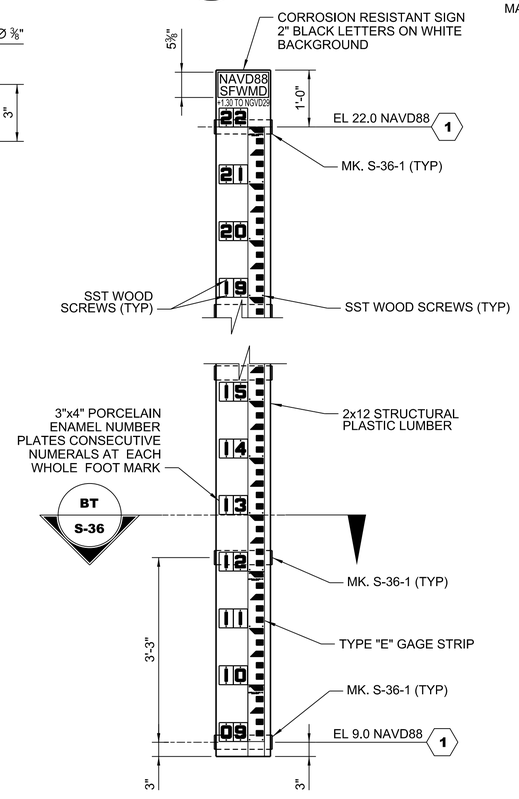

ELEVATION

3 S-36 STAFF GAGE DETAIL

SCALE: NTS

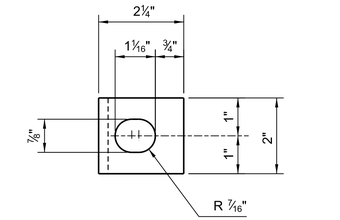

TOP VIEW

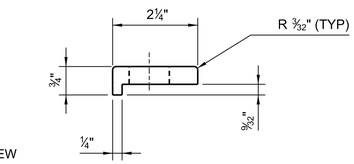

FRONT VIEW

RAIL CLIP MK. S-36-2

MATL: SST TYPE 316

GRAPHIC SCALES

"A" 12" 9" 6" 3" 0 1'

"B" 24" 12" 0 2' 4' 6'

US Army Corps of Engineers, Jacksonville District

No.	SYM	ZONE	DESCRIPTION
N	A	A-N	ABCD...

DEPARTMENT OF THE ARMY
CORPS OF ENGINEERS
JACKSONVILLE DISTRICT
JACKSONVILLE, FLORIDA

DESIGNED BY: C.B.G.		DATE: MARCH 2015	
DWN BY: W.E.S.	CHD BY: J.S.F.	SOLICITATION NO.: W912EP-16-R-0010	
SUBMITTED BY: N/A		CONTRACT NO.: N/A	
PLOT SCALE: AS SHOWN	PLOT DATE: Apr 25, 2016	FILE NUMBER: N/A	
FILE NAME: 114527-HHDRCRIP3-SF536.DGN			

HERBERT HOOVER DIKE REHABILITATION PROJECT
STRUCTURE REPLACEMENTS

S-291 (IP-3) RECONSTRUCTION

STRUCTURAL

BULKHEAD SLOT DETAILS AND METAL FABRICATIONS

DRAWING NO.

S-36

pw:\\COE-SAJ\PWP02\JAX.saj.ds.usace.army.mil:SAJPW\Documents\C&SP\Herbert Hoover Dike Rehabilitation\03-Culvert Reconstruction\070 - Plans\IP-3\07 Structures\S-36

pw:\\COE-SAJ\PWP02\JAX.saj.ds.usace.army.mil:SAJPW\Documents\C&SP\Herbert Hoover Dike Rehabilitation\S-292(IP-1), S-290(IP-2), S-291(IP-3) Culvert Reconstruction\070 - Plans\IP-3\07 Structures\S-36

SAFETY ON THIS JOB DEPENDS ON YOU

NOTES:

1. HOLES FOR ANCHOR BOLTS SHALL BE SLOTTED.
2. PUMP GROUT INTO CENTER GROUT HOLES UNTIL GROUT IS SEEN IN ALL HOLES.

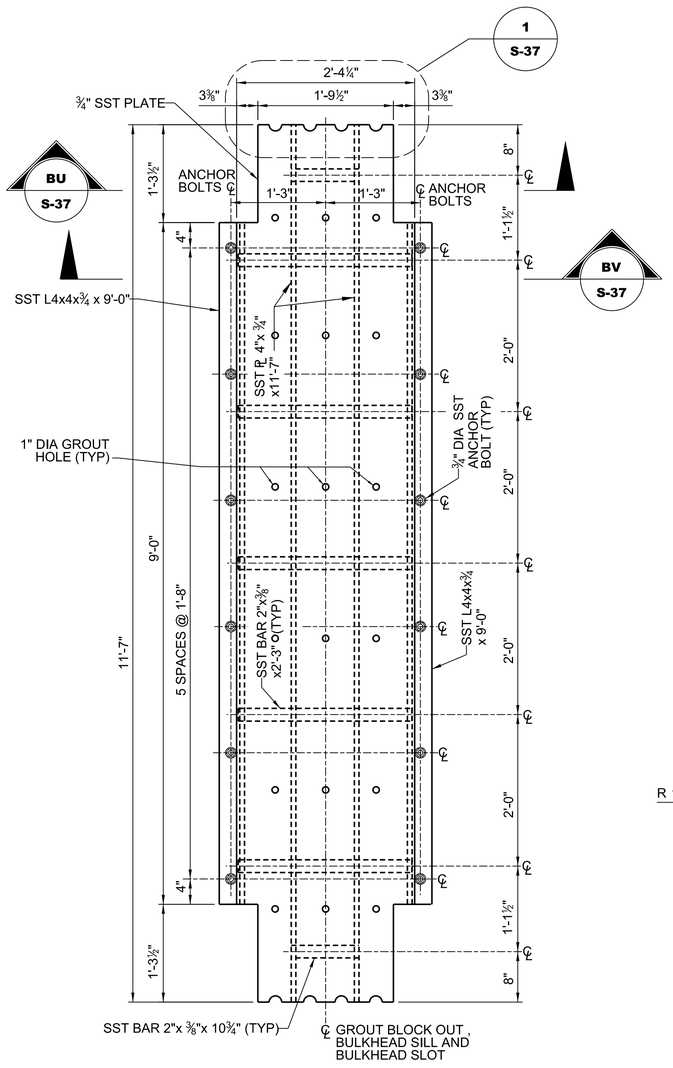

2 **DETAIL**
SCALE: B

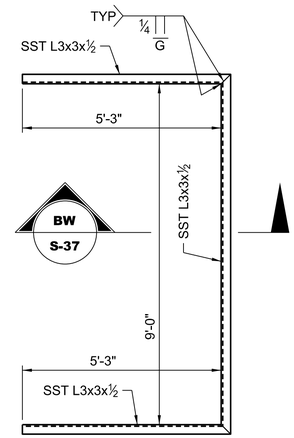

OPERATING PLATFORM ARMOUR MK. S-37-1

QTY REQ'D 2

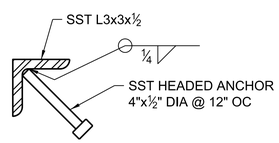

BW S-37 **SECTION**
SCALE: N.T.S.

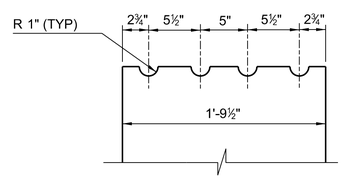

1 S-37 **DETAIL**
SCALE: A

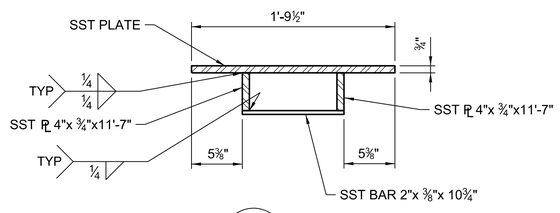

BU S-37 **SECTION**
SCALE: A

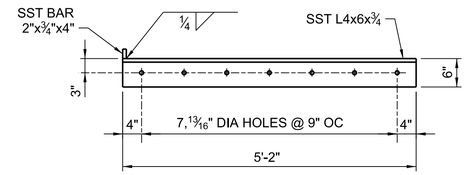

FRONT VIEW

NOTE: SST BAR IS OPPOSITE HAND FOR SUPPORT ANGLE ON OTHER SIDE

PLATFORM SUPPORT MK. S-37-2

QTY REQ'D 2 LEFT HAND, 2 RIGHT HAND

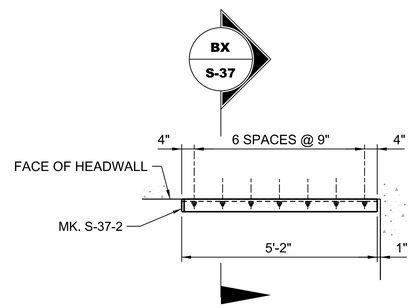

NOTE: SUPPORT ANGLE ON OTHER SIDE IS OPPOSITE HAND

PLAN
SCALE: C

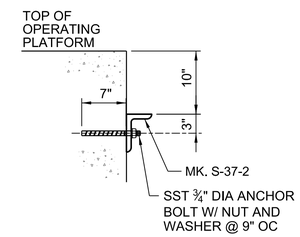

BX S-37 **SECTION**
SCALE: N.T.S.

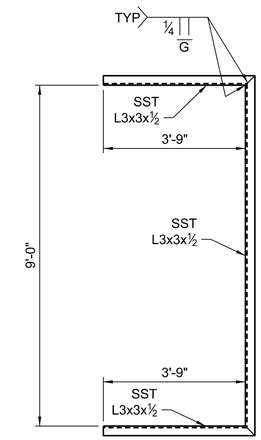

OPERATING PLATFORM ARMOUR MK. S-37-3

QTY REQ'D 2

PLATFORM SUPPORT INSTALLATION DETAIL

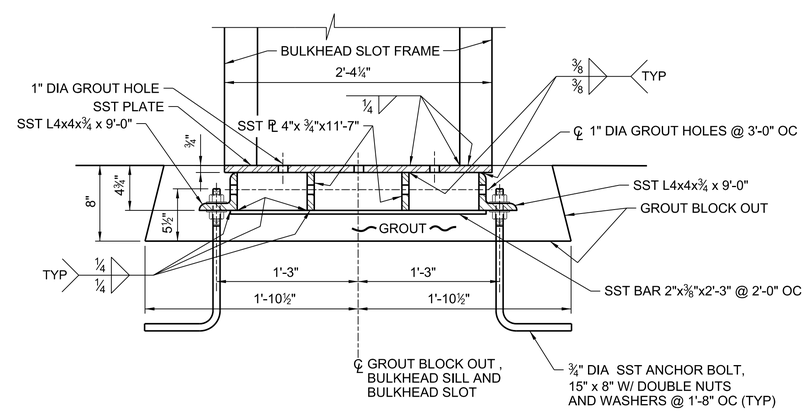

BV S-37 **SECTION**
SCALE: A

GRAPHIC SCALES

"A" 12" 9" 6" 3" 0 1'
"B" 1' 0 1' 2'
"C" 12" 6" 0 1' 2' 3' 4' 5'

US Army Corps of Engineers
Jacksonville District

No.	SYM	ZONE	DESCRIPTION
N	A	A-N	ABCD...

DEPARTMENT OF THE ARMY
CORPS OF ENGINEERS
JACKSONVILLE DISTRICT
JACKSONVILLE, FLORIDA

DESIGNED BY: C.B.G. | DATE: MARCH 2015
DWN BY: W.E.S. | CKD BY: J.S.F. | SOLICITATION NO.: W912EP-16-R-0010
SUBMITTED BY: N/A | CONTRACT NO.: N/A
PLOT SCALE: AS SHOWN | PLOT DATE: Apr 25, 2014 | FILE NUMBER: N/A
FILE NAME: 114527-HHDRCRIP3-SF537.DGN

HERBERT HOOVER DIKE REHABILITATION PROJECT
STRUCTURE REPLACEMENTS

S-291 (IP-3) RECONSTRUCTION

STRUCTURAL

BULKHEAD SILL AND OPERATING PLATFORM ARMOUR DETAILS

DRAWING NO.
S-37

pw:\\COE-SAJ\PWP02\JAX.saj.ds.usace.army.mil:SAJPW\Documents\C&SF\Herbert Hoover Dike Rehabilitation\03-Culvert Rehabilitation\S-292(IP-1), S-290(IP-2), S-291(IP-3) Culvert Reconstruction\070 - Plans\IP-3\07 Structures\S-37

SAFETY ON THIS JOB DEPENDS ON YOU

KEYNOTES:

1 CONTRACTOR SHALL PROVIDE, BUT NOT INSTALL, 2 HORIZONTAL SAFETY LINES IN ACCORDANCE WITH DETAIL 4 OF DWG NO. S-57. CONTRACTOR SHALL DELIVER THE 2 HORIZONTAL SAFETY LINES TO THE U.S. ARMY CORPS OF ENGINEERS, SOUTH FLORIDA OPERATIONS OFFICE, CLEWISTON FLORIDA.

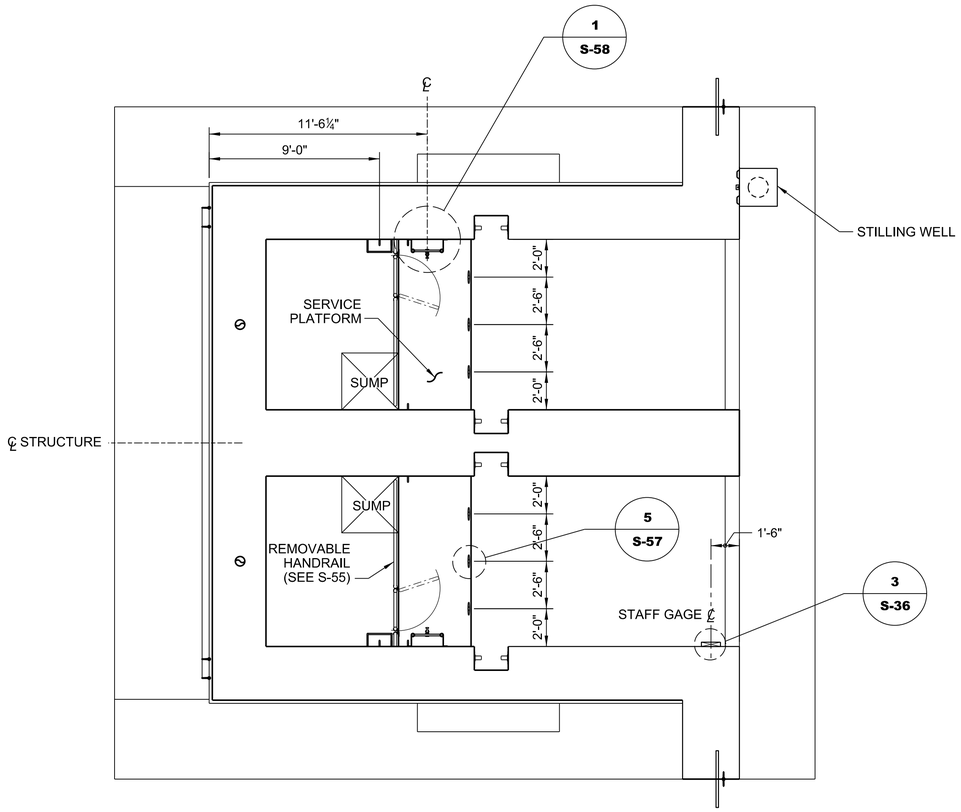

PLAN - EL 17.5
SCALE: A

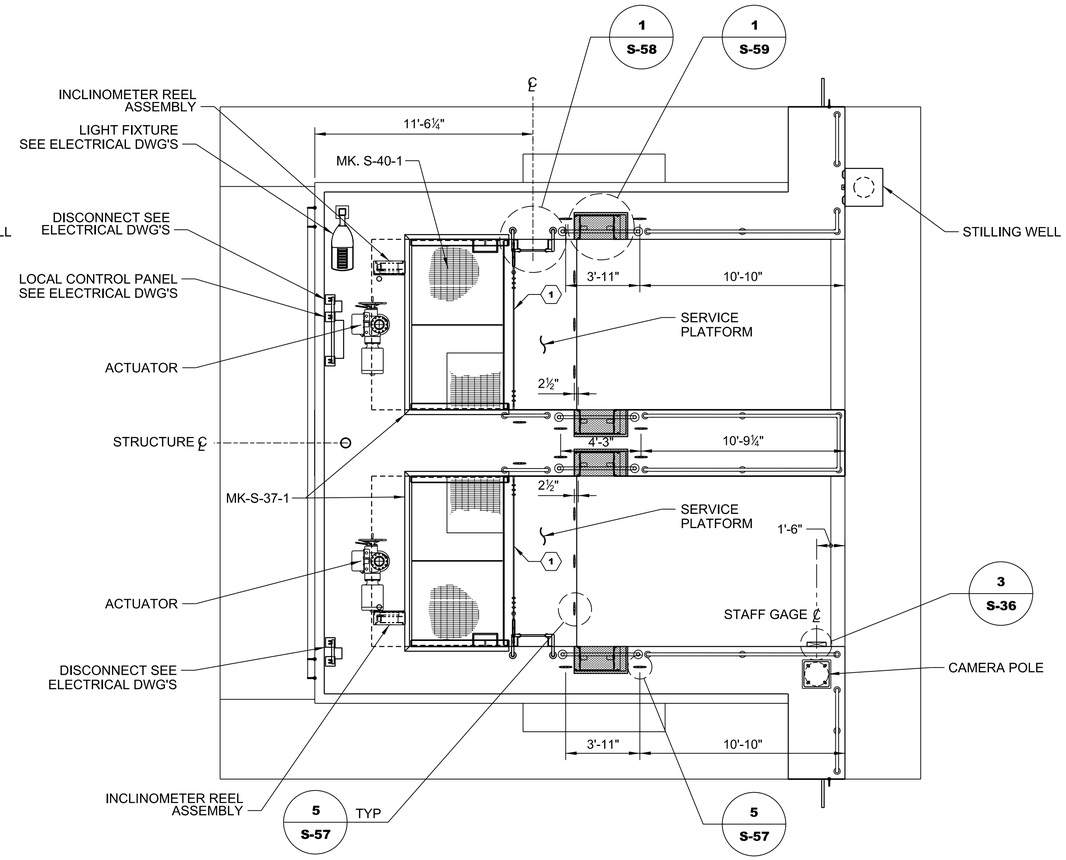

PLAN - EL 30.5
SCALE: A

GRAPHIC SCALE

"A" 24" 12" 0 2' 4' 6' 8' 10'

US Army Corps of Engineers
Jacksonville District

No.	SYM	ZONE	DESCRIPTION
N	A	A-N	ABCD...

DEPARTMENT OF THE ARMY
CORPS OF ENGINEERS
JACKSONVILLE DISTRICT
JACKSONVILLE, FLORIDA

DESIGNED BY: C.B.G.
DWN BY: W.E.S.
CKD BY: J.S.F.
SUBMITTED BY: N/A
DATE: MARCH 2015
SOLICITATION NO.: W912EP-16-R-0010
CONTRACT NO.: N/A
PLOT SCALE: AS SHOWN
PLOT DATE: Apr 25, 2016
FILE NUMBER: N/A
FILE NAME: 114527-HHDRCRIP3-SB138.DGN

HERBERT HOOVER DIKE REHABILITATION PROJECT
STRUCTURE REPLACEMENTS

S-291 (IP-3) RECONSTRUCTION

STRUCTURAL

LAKESIDE HEADWALL FIXTURES

DRAWING NO.

S-38

pw:\\COE-SAJPW\P02JAX.saj.ds.usace.army.mil:SAJPW\Documents\C&SF\Herbert Hoover Dike Rehabilitation\03-Culvert Reconstruction\070 - Plans\IP-3\07 Structures\S-38

S-292(IP-1), S-290(IP-2), S-291(IP-3) Culvert Reconstruction

SAFETY ON THIS JOB DEPENDS ON YOU

KEYNOTES:

1 CONTRACTOR SHALL PROVIDE, BUT NOT INSTALL, 2 HORIZONTAL SAFETY LINES IN ACCORDANCE WITH DETAIL 4 OF DWG NO. S-57. CONTRACTOR SHALL DELIVER THE 2 HORIZONTAL SAFETY LINES TO THE U.S. ARMY CORPS OF ENGINEERS, SOUTH FLORIDA OPERATIONS OFFICE, CLEWISTON FLORIDA.

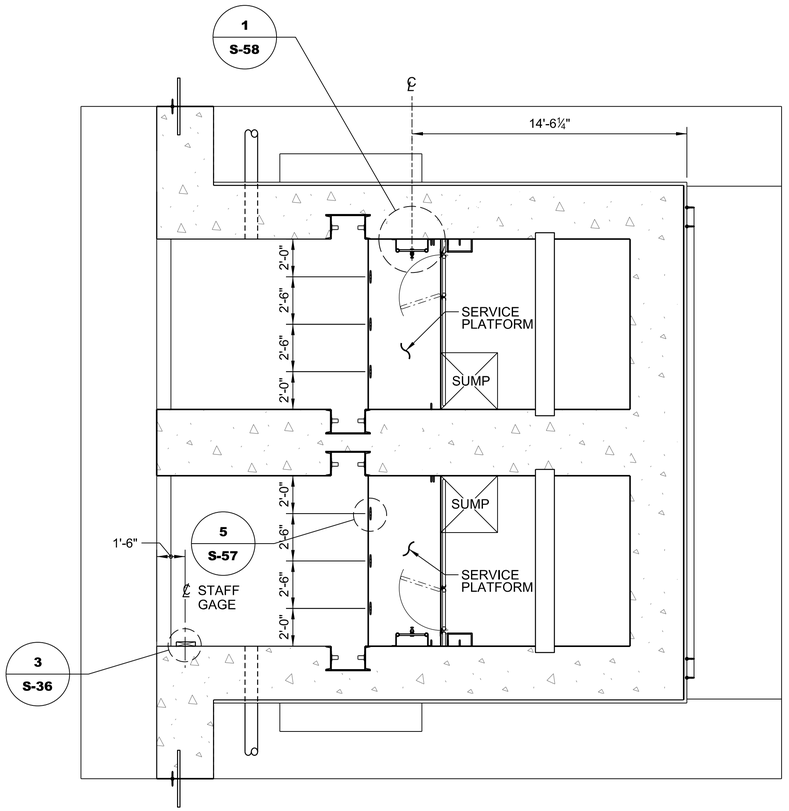

PLAN - EL 22.75
SCALE: A

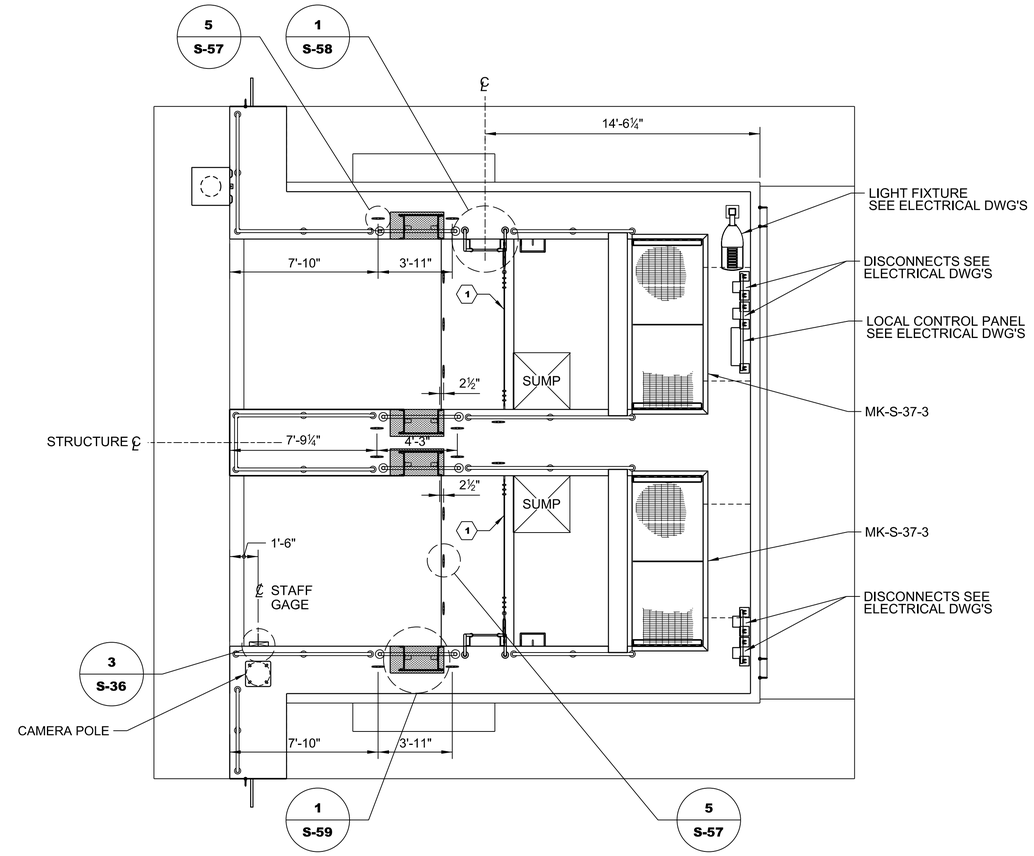

PLAN - EL 30.5
SCALE: A

GRAPHIC SCALE

"A" 24" 12" 0 2' 4' 6' 8' 10'

US Army Corps of Engineers
Jacksonville District

No.	SYM	ZONE	DESCRIPTION
N	A	A-N	ABCD...

DEPARTMENT OF THE ARMY
CORPS OF ENGINEERS
JACKSONVILLE DISTRICT
JACKSONVILLE, FLORIDA

DESIGNED BY: C.B.G. | DATE: MARCH 2015
DWN BY: W.E.S. | CKD BY: J.S.F. | SOLICITATION NO.: W912EP-16-R-0010
SUBMITTED BY: N/A | CONTRACT NO.: N/A
PLOT SCALE: AS SHOWN | PLOT DATE: Apr 25, 2016 | FILE NUMBER: N/A
FILE NAME: 114527-HHDRCRIP3-SB139.DGN

HERBERT HOOVER DIKE REHABILITATION PROJECT
STRUCTURE REPLACEMENTS

S-291 (IP-3) RECONSTRUCTION

STRUCTURAL

LANDSIDE HEADWALL FIXTURES

DRAWING NO.

S-39

pw:\\COE-SAJ\PWP02\JAX.saj.ds.usace.army.mil:SAJ\PW\Documents\C&SF\Herbert Hoover Dike Rehabilitation\03-Culvert Rehabilitation\S-292(IP-1), S-290(IP-2), S-291(IP-3) Culvert Reconstruction\070 - Plans\IP-3\07 Structures\S-39

SAFETY ON THIS JOB DEPENDS ON YOU

NOTES:

1. ALL HARDWEAR AND FASTENERS USED SHALL BE HOT-DIP GALVANIZED SEE SPECIFICATION 05-50-15.

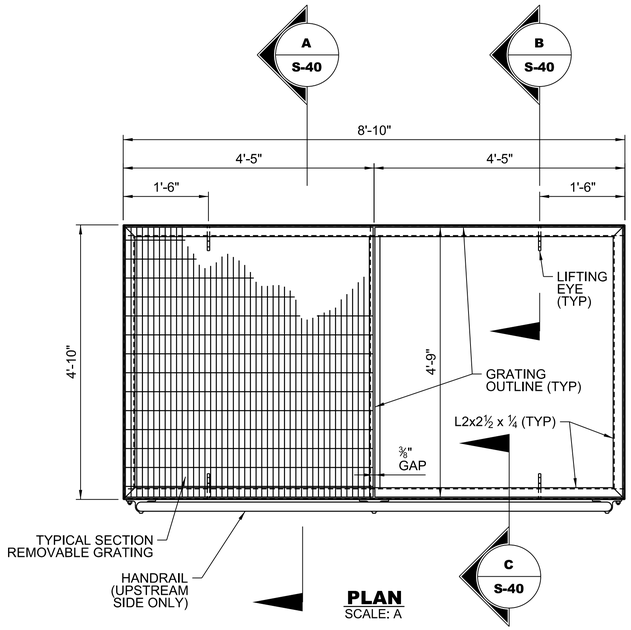

PLAN
SCALE: A

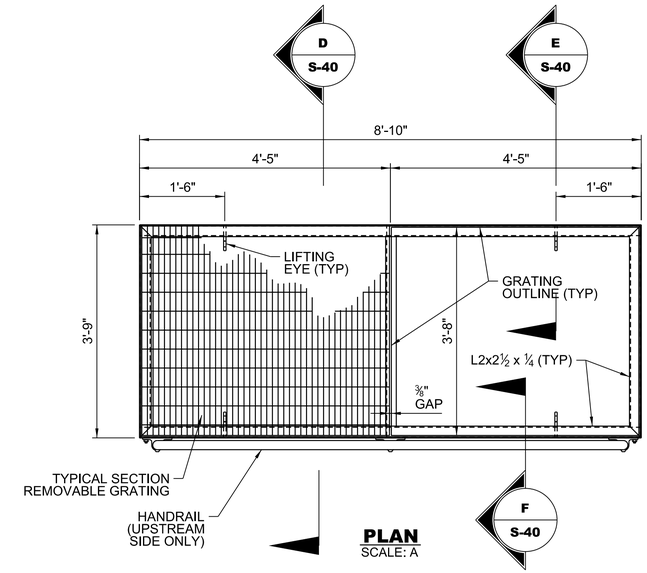

PLAN
SCALE: A

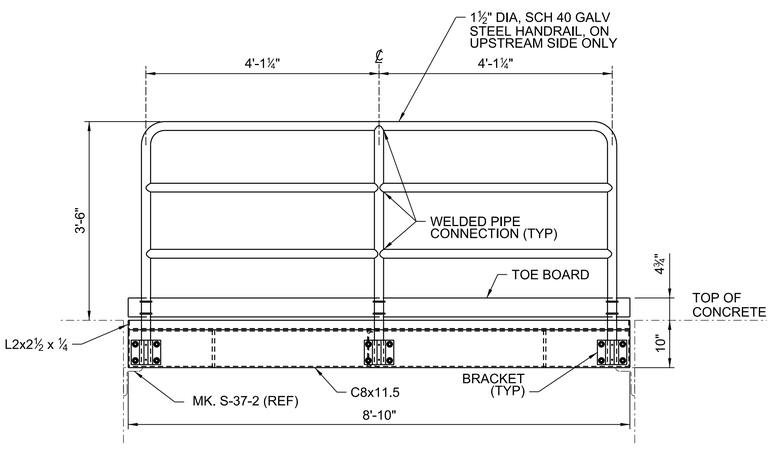

ELEVATION
SCALE: A

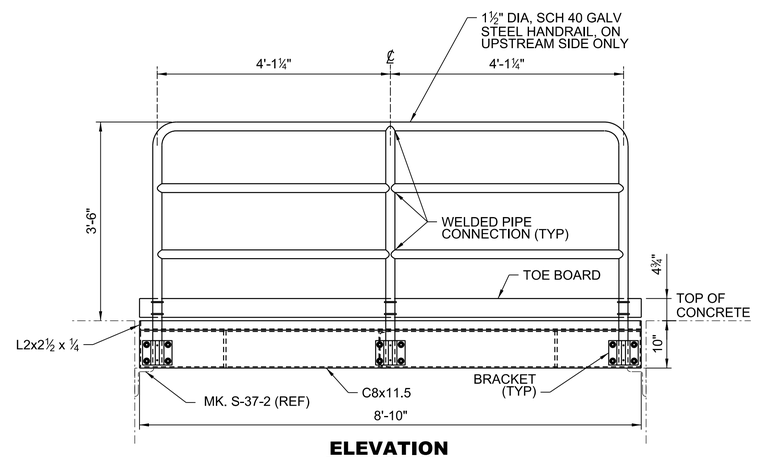

ELEVATION
SCALE: A

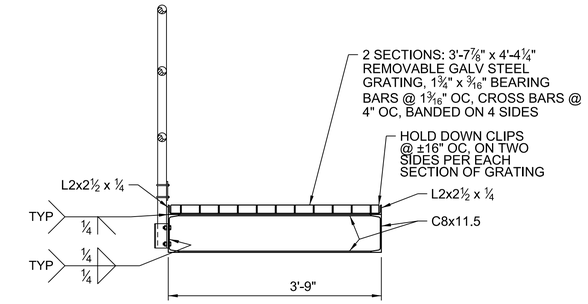

D S-40 SECTION
SCALE: A

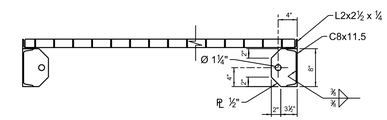

E S-40 SECTION
SCALE: B

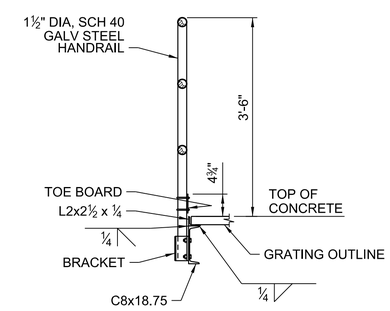

F S-40 SECTION
SCALE: A

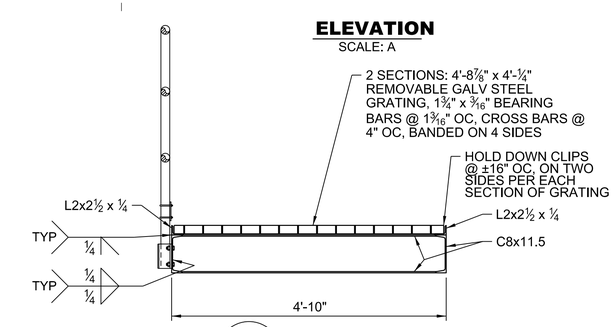

A S-40 SECTION
SCALE: A

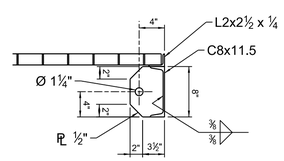

B S-40 SECTION
SCALE: B

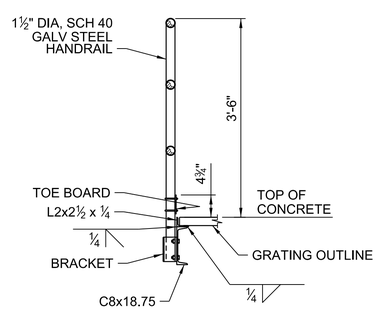

C S-40 SECTION
SCALE: A

PLATFORM EXTENSION MK. S-40-1
QTY REQ'D 1

PLATFORM EXTENSION MK. S-40-2
QTY REQ'D 1

GRAPHIC SCALES

"A" 12" 6" 0 1' 2' 3'

"B" 1' 0 1' 2'

US Army Corps of Engineers
Jacksonville District

No.	SYM	ZONE	DESCRIPTION
N	A	A-N	ABCD...

DESIGNED BY: C.B.G.
DWN BY: W.E.S.
CKD BY: J.S.F.
SUBMITTED BY: N/A
PLOT SCALE: AS SHOWN
PLOT DATE: Apr 25, 2014
DATE: MARCH 2015
SOLICITATION NO.: W912EP-16-R-0010
CONTRACT NO.: N/A
FILE NUMBER: N/A
FILE NAME: 114527-HHDRCRIP3-SF140.DGN

DEPARTMENT OF THE ARMY
CORPS OF ENGINEERS
JACKSONVILLE DISTRICT
JACKSONVILLE, FLORIDA

HERBERT HOOVER DIKE REHABILITATION PROJECT
STRUCTURE REPLACEMENTS

S-291 (IP-3) RECONSTRUCTION

STRUCTURAL

HEADWALL ACCESSORIES

DRAWING NO.
S-40

pw:\\COE-SAJPW\P02\JAX.saj.ds.usace.army.mil:SAJPW\Documents\C&SF\Herbert Hoover Dike Rehabilitation\03-Culvert Rehabilitation\S-292(IP-1), S-290(IP-2), S-291(IP-3) Culvert Reconstruction\070 - Plans\IP-3\07 Structures\S-40

SAFETY ON THIS JOB DEPENDS ON YOU

NOTES:

1. FOR RAILING DETAILS REFER TO DWGS NOS. S-55 AND S-56.

KEYNOTES:

1. REMOVABLE RAILING, SEE DETAIL 7 ON DWG NO. S-55.
2. REMOVABLE RAILING SECTION, SEE DETAILS 5 AND 6 ON DWG NO. S-55.

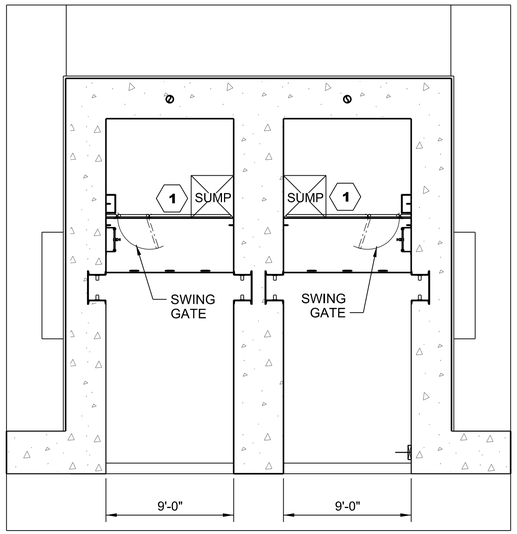

PLAN - EL 17.5
SCALE: A

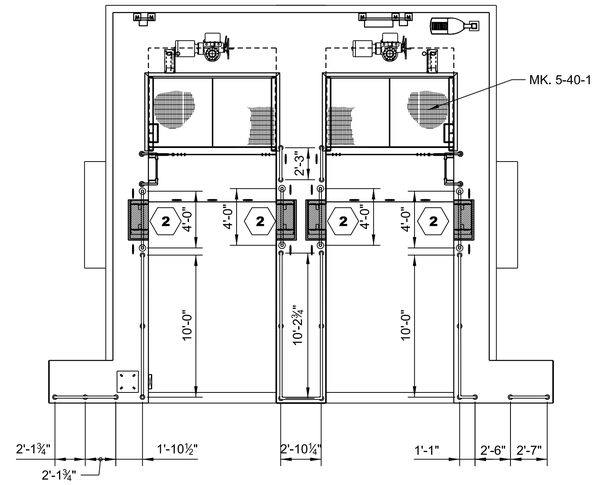

PLAN - EL 30.5
SCALE: A

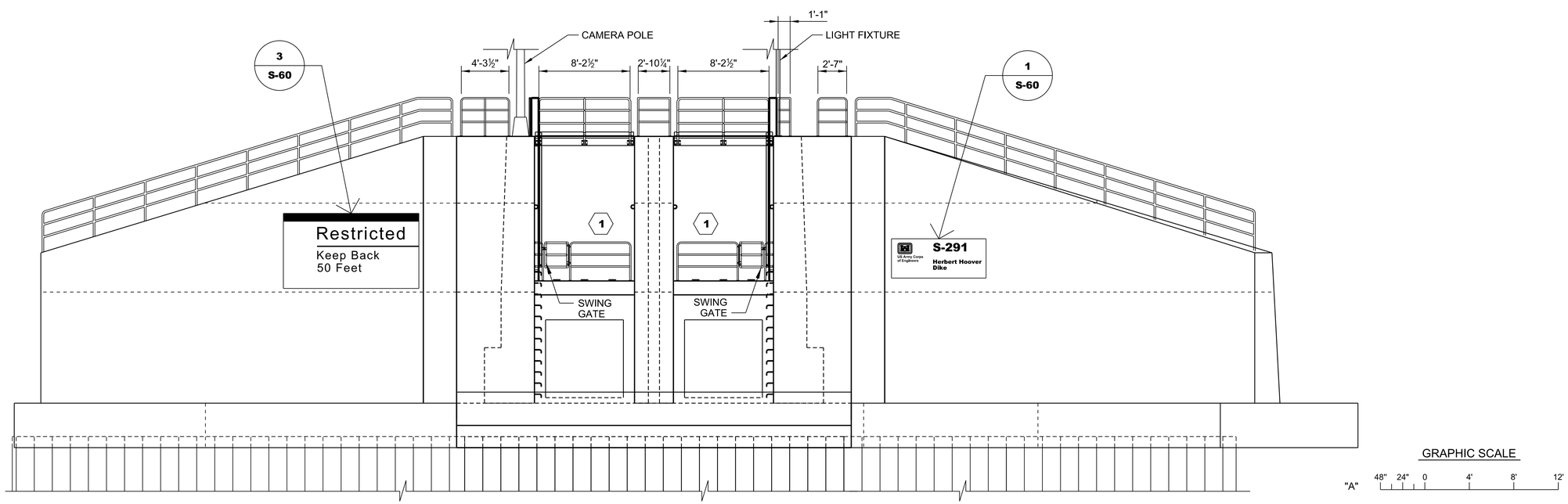

ELEVATION
SCALE: A

US Army Corps of Engineers
Jacksonville District

No.	SYM	ZONE	DESCRIPTION
N	A	A-N	ABCD...

DEPARTMENT OF THE ARMY
CORPS OF ENGINEERS
JACKSONVILLE DISTRICT
JACKSONVILLE, FLORIDA

DESIGNED BY: C.B.G.	DATE: MARCH 2015
DWN BY: W.E.S.	CKD BY: J.S.F.
SOLICITATION NO.: W912EP-16-R-0010	
SUBMITTED BY: N/A	CONTRACT NO.: N/A
PLOT SCALE: AS SHOWN	PLOT DATE: Apr 25, 2016
FILE NUMBER: N/A	
FILE NAME: 114527-HHDRCRIP3-SF141.DGN	

HERBERT HOOVER DIKE REHABILITATION PROJECT
STRUCTURE REPLACEMENTS

S-291 (IP-3) RECONSTRUCTION

STRUCTURAL
LAKESIDE HEADWALL
RAILING PLAN AND ELEVATION

DRAWING NO.
S-41

pw:\\COE-SAJPWP02JAX.saj.ds.usace.army.mil:SAJPW\Documents\C&SF\Herbert Hoover Dike Rehabilitation\03-Culvert Rehabilitation\S-292(IP-1), S-290(IP-2), S-291(IP-3) Culvert Reconstruction\070 - Plans\IP-3\07 Structures\S-41

SAFETY ON THIS JOB DEPENDS ON YOU

NOTES:

1. FOR RAILING DETAILS REFER TO DWGS NOS. S-55 AND S-56.

KEYNOTES:

1. REMOVABLE RAILING, SEE DETAIL 7 ON DWG NO. S-55.
2. REMOVABLE RAILING SECTION, SEE DETAILS 5 AND 6 ON DWG NO. S-55.

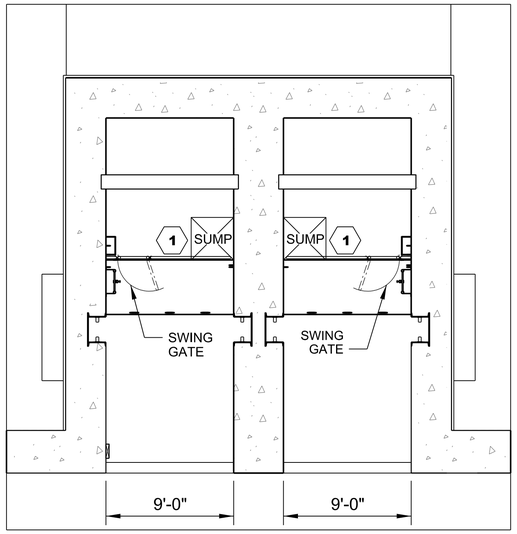

PLAN - EL 22.75
SCALE: A

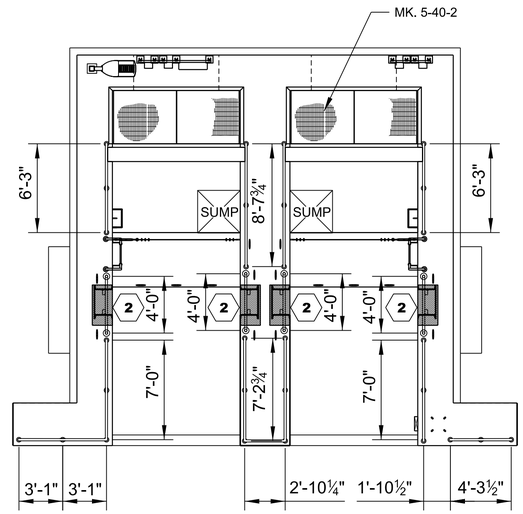

PLAN - EL 30.5
SCALE: A

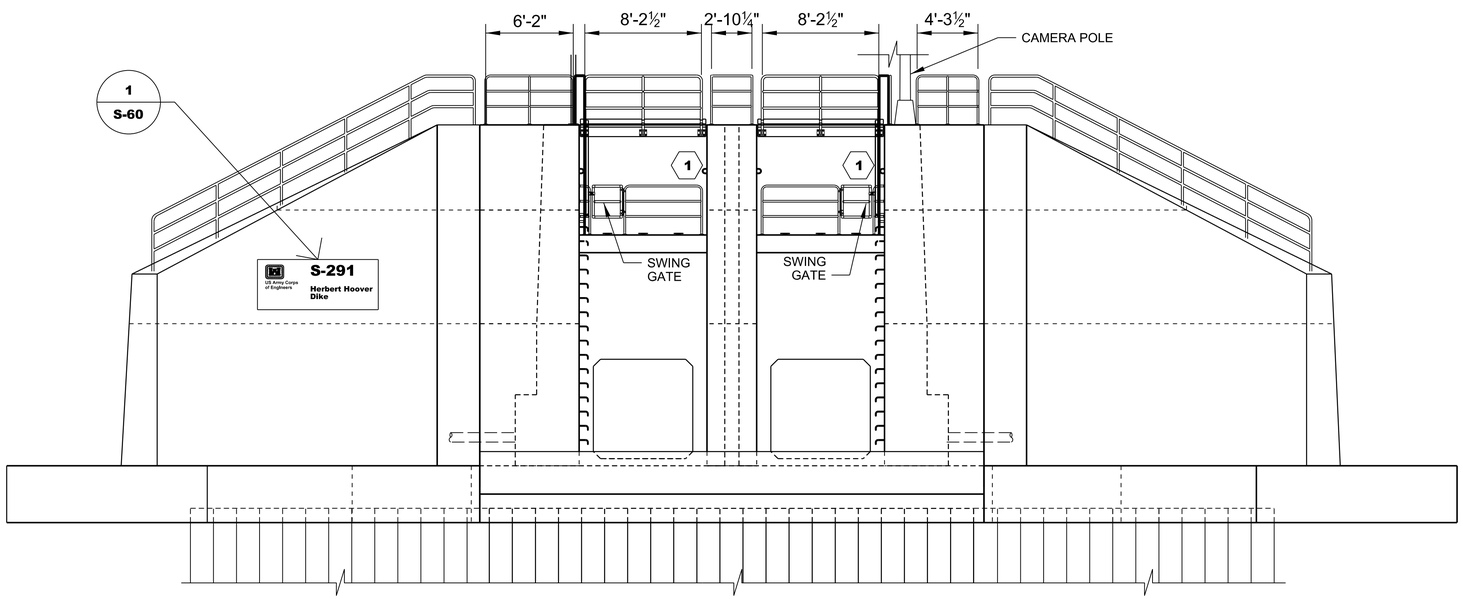

ELEVATION
SCALE: A

GRAPHIC SCALE

"A" 48" 24" 0 4' 8' 12'

US Army Corps of Engineers
Jacksonville District

No.	SYM	ZONE	DESCRIPTION
N	A	A-N	ABCD...

DESIGNED BY: C.B.G.
DWN BY: W.E.S.
CKD BY: J.S.F.
SUBMITTED BY: N/A
DATE: MARCH 2015
SOLICITATION NO.: W912EP-16-R-0010
CONTRACT NO.: N/A
PLOT SCALE: AS SHOWN
PLOT DATE: Apr 25, 2016
FILE NUMBER: N/A
FILE NAME: 1114527-HHDRCRIP3-SF142.DGN

DEPARTMENT OF THE ARMY
CORPS OF ENGINEERS
JACKSONVILLE DISTRICT
JACKSONVILLE, FLORIDA

HERBERT HOOVER DIKE REHABILITATION PROJECT
STRUCTURE REPLACEMENTS

S-291 (IP-3) RECONSTRUCTION

STRUCTURAL

LANDSIDE HEADWALL
RAILING PLAN AND ELEVATION

DRAWING NO.
S-42

pw:\\COE-SAJPWP02\JAX.saj.ds.usace.army.mil:SAJPW\Documents\C&SF\Herbert Hoover Dike Rehabilitation\03-Culvert Rehabilitation\S-292(IP-1), S-290(IP-2), S-291(IP-3) Culvert Reconstruction\070 - Plans\IP-3\07 Structures\S-42

SAFETY ON THIS JOB DEPENDS ON YOU

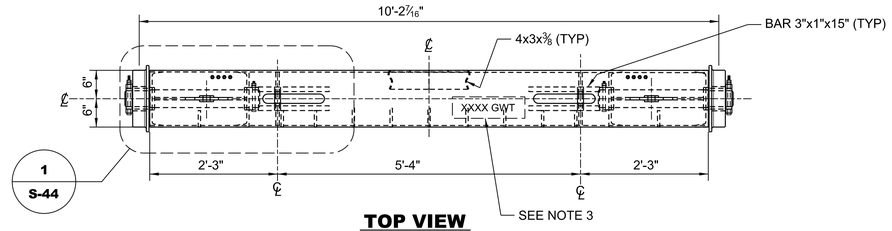

TOP VIEW
SCALE: A

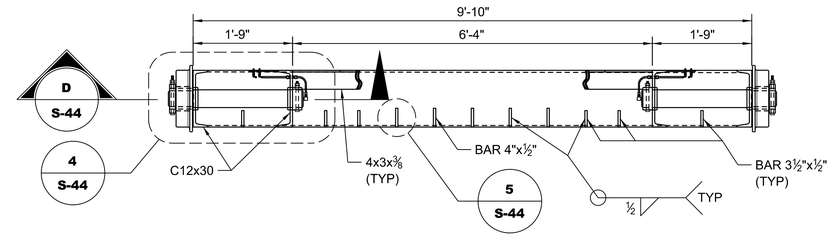

SECTION
A S-43
SCALE: A

NOTES:

1. ALL STRUCTURAL STEEL, TUBING, BARS, PIPE AND PLATE, SHALL BE TYPE 316L STAINLESS STEEL, UNLESS OTHERWISE SPECIFIED.
2. ALL HARDWARE ITEMS, TUBING, FASTENERS AND FITTINGS USED SHALL BE STAINLESS STEEL, UNLESS OTHERWISE SPECIFIED.
3. CONTRACTOR SHALL WEIGH THE COMPLETED ASSEMBLY AND MARK THE GROSS WEIGHT WITH THE FORMAT "XXXX GWT", USING A RAISED WELD BEAD WHERE INDICATED.
4. TOTAL ESTIMATE WEIGHT 5,500lbs.
5. REFER TO SPECIFICATION 35 20 17 VERTICAL LIFT ROLLER GATES.

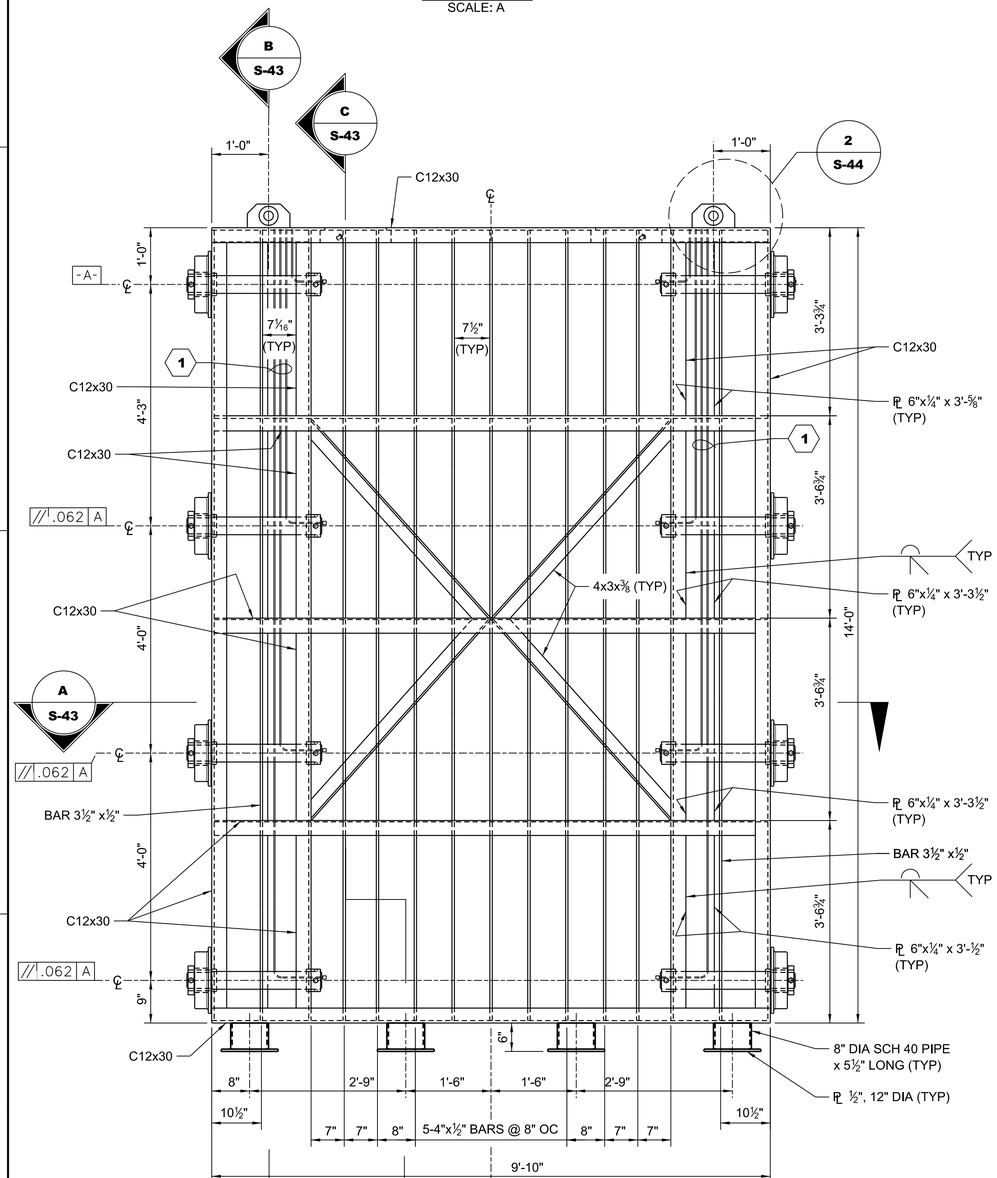

FRONT VIEW
SCALE: A

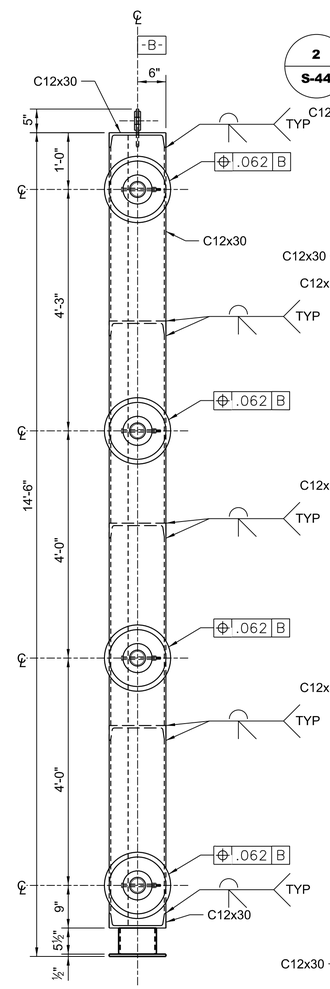

SIDE VIEW
SCALE: A

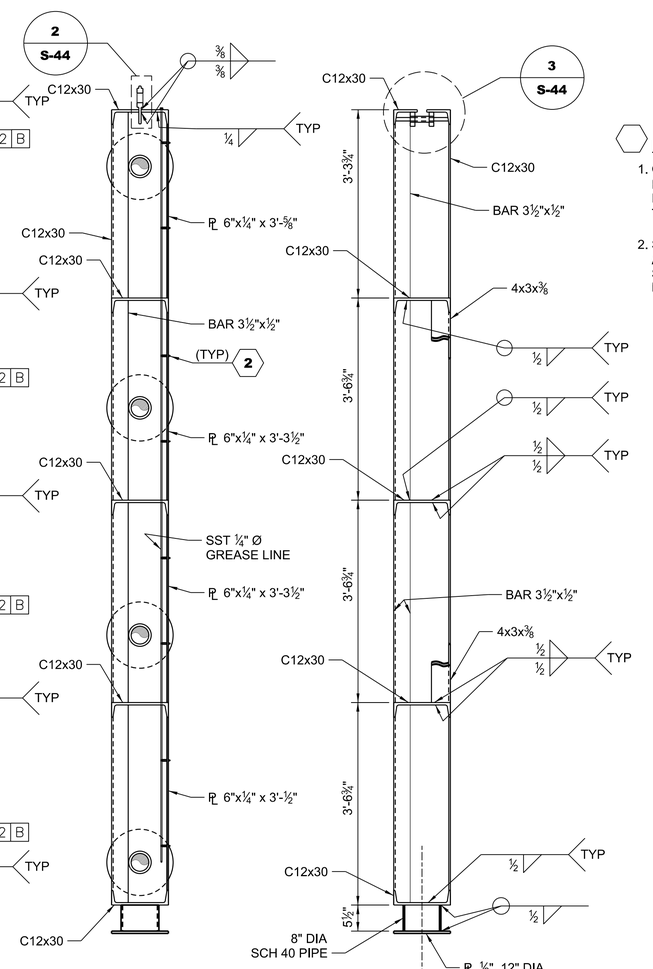

SECTION
B S-43
SCALE: A

SECTION
C S-43
SCALE: A

KEY NOTES:

1. ONE 1/4" Ø GREASE LINE SHALL BE INSTALLED, BETWEEN END OF THE AXLE AND THE BUTTON HEAD GREASE FITTING ON TOP CROSS MEMBER, FOR EACH ROLLER. THE GREASE LINE MINIMUM BEND RADIUS IS 1 1/2".
2. SECURE GREASE LINE TO 6"x1/4" SUPPORT PLATE AT A MAXIMUM SPACING OF 18" OC. GREASE LINE SHALL BE SECURED USING CLAMPS, STANDOFFS, MACHINE SCREWS, WASHERS AND HEX NUTS.

GRAPHIC SCALE
"A" 12" 6" 0 1' 2' 3'

US Army Corps of Engineers
Jacksonville District

No.	SYM	ZONE	DESCRIPTION
N	A	A-N	ABCD...

DESIGNED BY: C.B.G.
DATE: MARCH 2015
DWN BY: W.E.S.
CKD BY: J.S.F.
SOLICITATION NO.: W912EP-16-R-0010
SUBMITTED BY: N/A
CONTRACT NO.: N/A
PLOT SCALE: N/A
PLOT DATE: Apr 25, 2016
FILE NUMBER: N/A
FILE NAME: 114527-HHDRCRIP3-SC543.dgn

DEPARTMENT OF THE ARMY
CORPS OF ENGINEERS
JACKSONVILLE DISTRICT
JACKSONVILLE, FLORIDA

HERBERT HOOVER DIKE REHABILITATION PROJECT
STRUCTURE REPLACEMENTS

S-291 (IP-3) RECONSTRUCTION

STRUCTURES
TYPICAL DETAILS
MANATEE SCREEN PLAN AND SECTIONS

DRAWING NO.
S-43

pw:\\COE-SAJPWP02JAX.saj.ds.usace.army.mil:SAJPW\Documents\C&SF\Herbert Hoover Dike Rehabilitation\03-Culvert Rehabilitation\S-292(IP-1), S-290(IP-2), S-291(IP-3) Culvert Reconstruction\070 - Plans\IP-3\07 Structures\S-43

SAFETY ON THIS JOB DEPENDS ON YOU

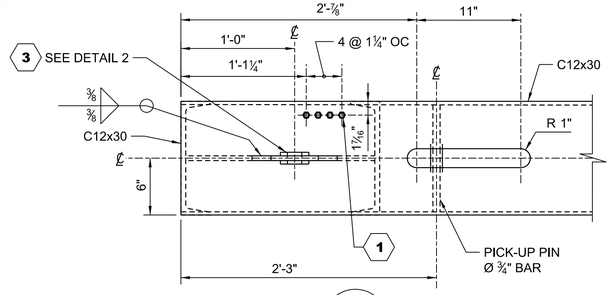

1 / S-43 DETAIL SCALE: A

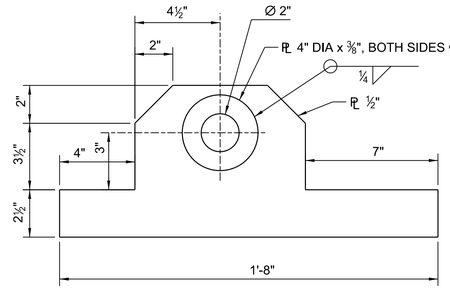

2 / S-43 DETAIL SCALE: B

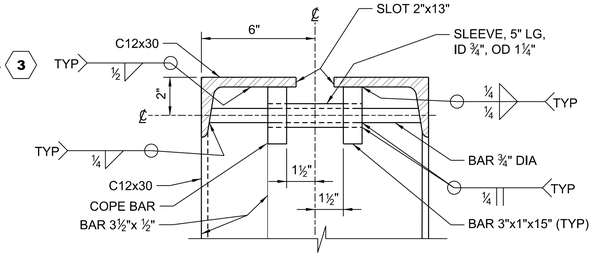

3 / S-43 DETAIL SCALE: B

NOTES:

1. ALL DIMENSIONS SHOWN IN A SCALED DETAIL OR SECTION ARE ±0.062 INCH. ALL OTHER DIMENSIONS ARE ±0.016 INCH UNLESS OTHERWISE SPECIFIED.
2. ALL HARDWARE AND FASTENERS USED SHALL BE STAINLESS STEEL.
3. ALL SURFACE FINISH MARKS ARE SHOWN IN MICROINCHES.

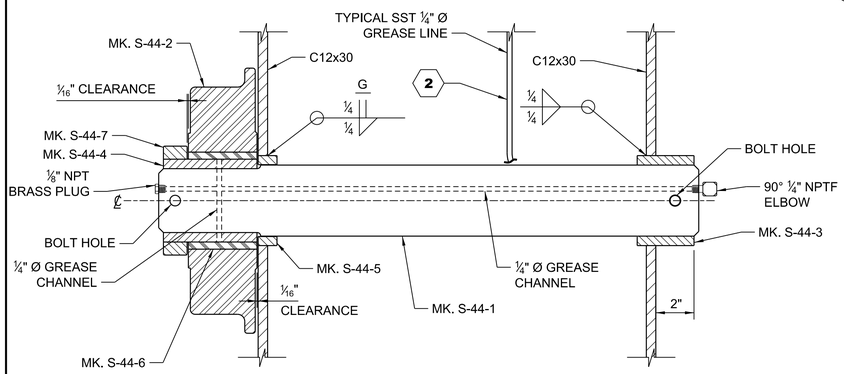

D / S-43 SECTION SCALE: B

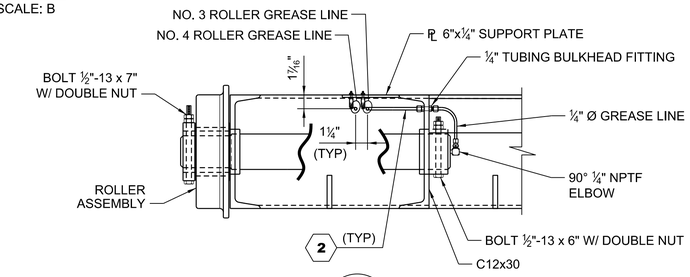

4 / S-43 DETAIL SCALE: A

KEY NOTES:

1. TYPICAL ¼" NPTF BUTTON HEAD GREASE FITTING, ALEMITE NO. A1186 OR EQUAL.
2. ONE GREASE LINE SHALL BE INSTALLED BETWEEN END OF THE AXLE AND THE BUTTON HEAD GREASE FITTING ON TOP CROSS MEMBER, FOR EACH ROLLER. SECURE LINE TO SUPPORT PLATE AT A MAXIMUM SPACING OF 18" OC. GREASE LINE SHALL BE SECURED USING CLAMPS, STANDOFFS, MACHINE SCREWS AND HEX NUTS. THE GREASE LINE MINIMUM BEND RADIUS IS 1½".
3. INSTALL BOTH REINFORCING RINGS AFTER LIFTING EYE IS INSTALLED IN THE TOP CROSS MEMBER.

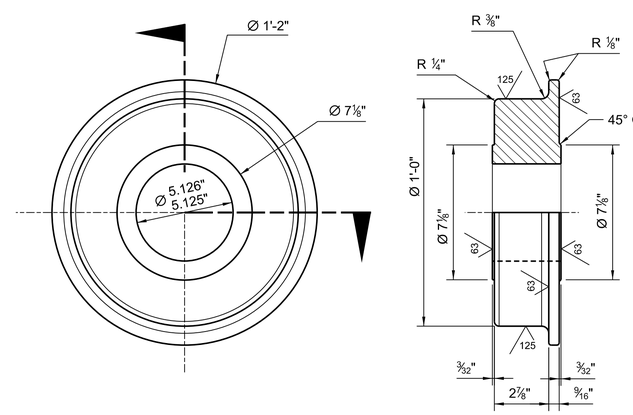

ROLLER MK. S-44-2

MATL: DUCTILE IRON, GRADE 80-55-06 8 REQ'D.

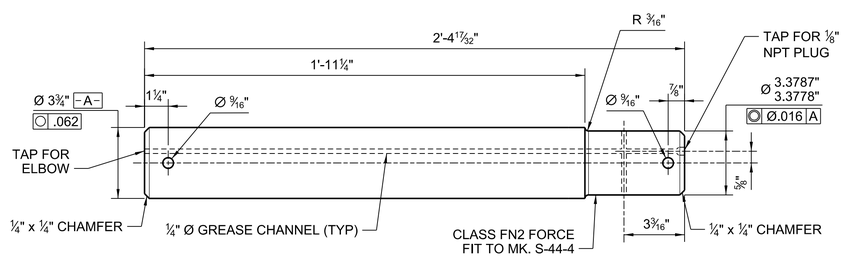

AXLE MK. S-44-1

MATL: ASTM A 276, UNS S21800 8 REQ'D.

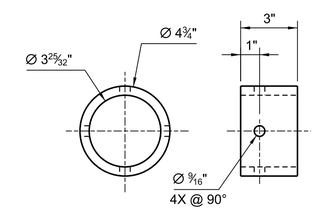

SLEEVE MK. S-44-3

MATL: 316L STAINLESS STEEL 8 REQ'D.

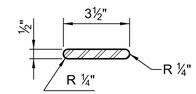

5 / S-43 DETAIL SCALE: B

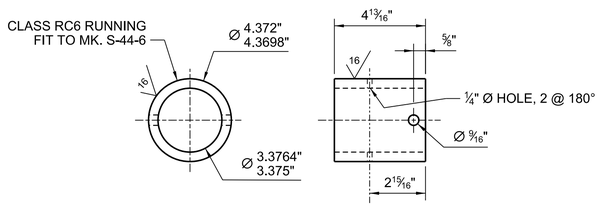

SLEEVE MK. S-44-4

MATL: 316L STAINLESS STEEL 8 REQ'D.

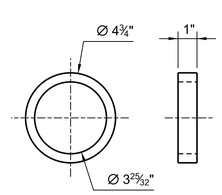

SLEEVE MK. S-44-5

MATL: 316L STAINLESS STEEL 8 REQ'D.

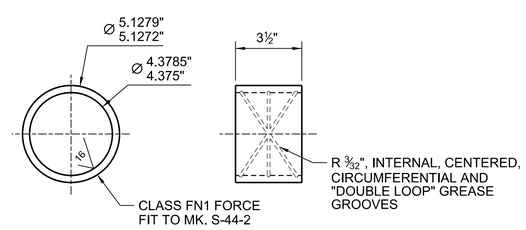

BUSHING MK. S-44-6

MATL: UNS C95400 8 REQ'D.

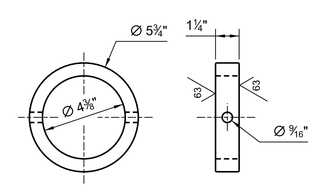

SHAFT COLLAR MK. S-44-7

MATL: 316L STAINLESS STEEL 8 REQ'D.

GRAPHIC SCALES

"A" 12" 9" 6" 3" 0 1'

"B" 0 3" 6" 12"

US Army Corps of Engineers, Jacksonville District

No.	SYM	ZONE	DESCRIPTION
N	A	A-N	ABCD...

DEPARTMENT OF THE ARMY
CORPS OF ENGINEERS
JACKSONVILLE DISTRICT
JACKSONVILLE, FLORIDA

DESIGNED BY: C.B.G.	DATE: MARCH 2015
DWN BY: W.E.S.	CKD BY: J.S.F.
SOLICITATION NO.: W912EP-16-R-0010	
SUBMITTED BY: N/A	CONTRACT NO.: N/A
PLOT SCALE: AS SHOWN	PLOT DATE: Apr 25, 2016
FILE NUMBER: N/A	
FILE NAME: 114527-HHDRCRIP3-SC544.dgn	

HERBERT HOOVER DIKE REHABILITATION PROJECT
STRUCTURE REPLACEMENTS

S-291 (IP-3) RECONSTRUCTION

STRUCTURES
TYPICAL DETAILS
MANATEE SCREEN DETAILS AND PARTS

DRAWING NO.
S-44

pw:\\COE-SAJPWP02JAX.saj.ds.usace.army.mil:SAJPW\Documents\C&SF\Herbert Hoover Dike Rehabilitation\03-Culvert Rehabilitation\S-292(IP-1), S-290(IP-2), S-291(IP-3) Culvert Reconstruction\070 - Plans\IP-3\07 Structures\S-44

SAFETY ON THIS JOB DEPENDS ON YOU

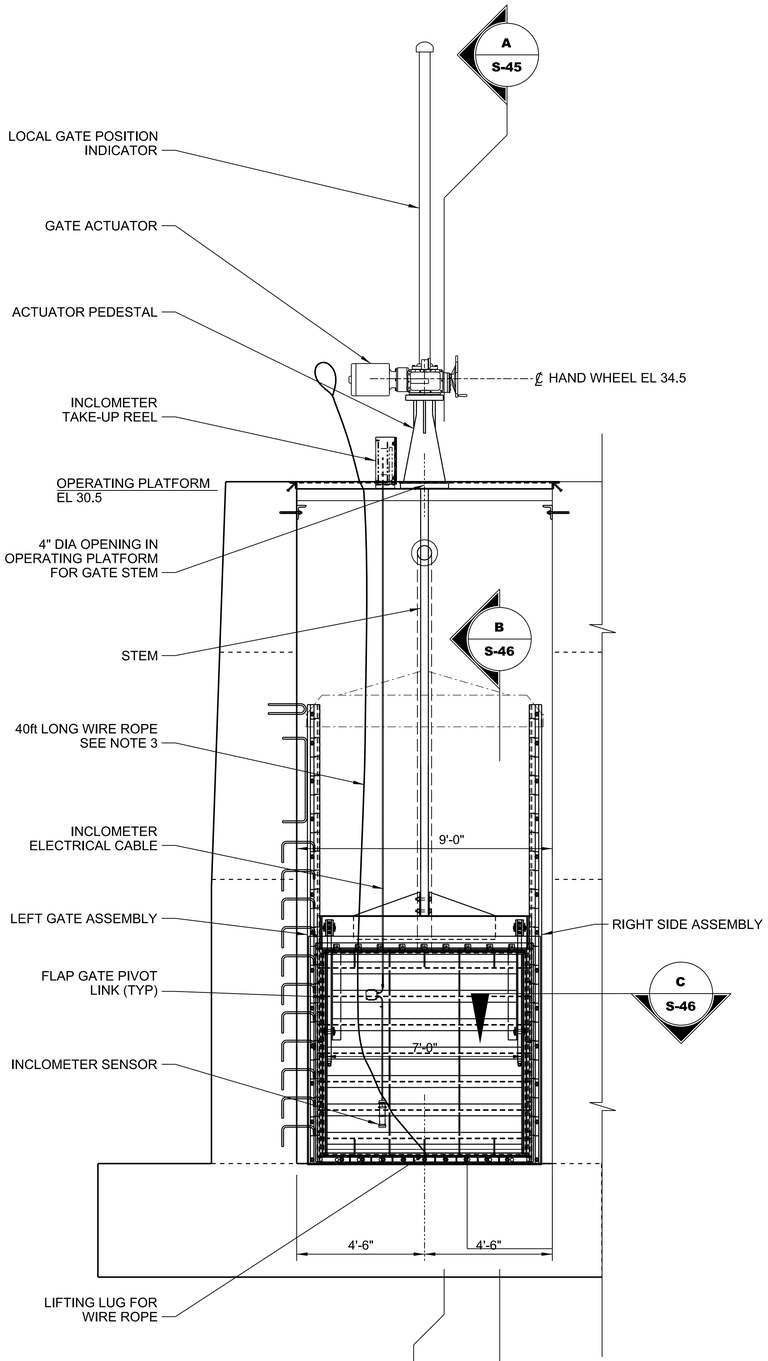

ELEVATION
SCALE: A

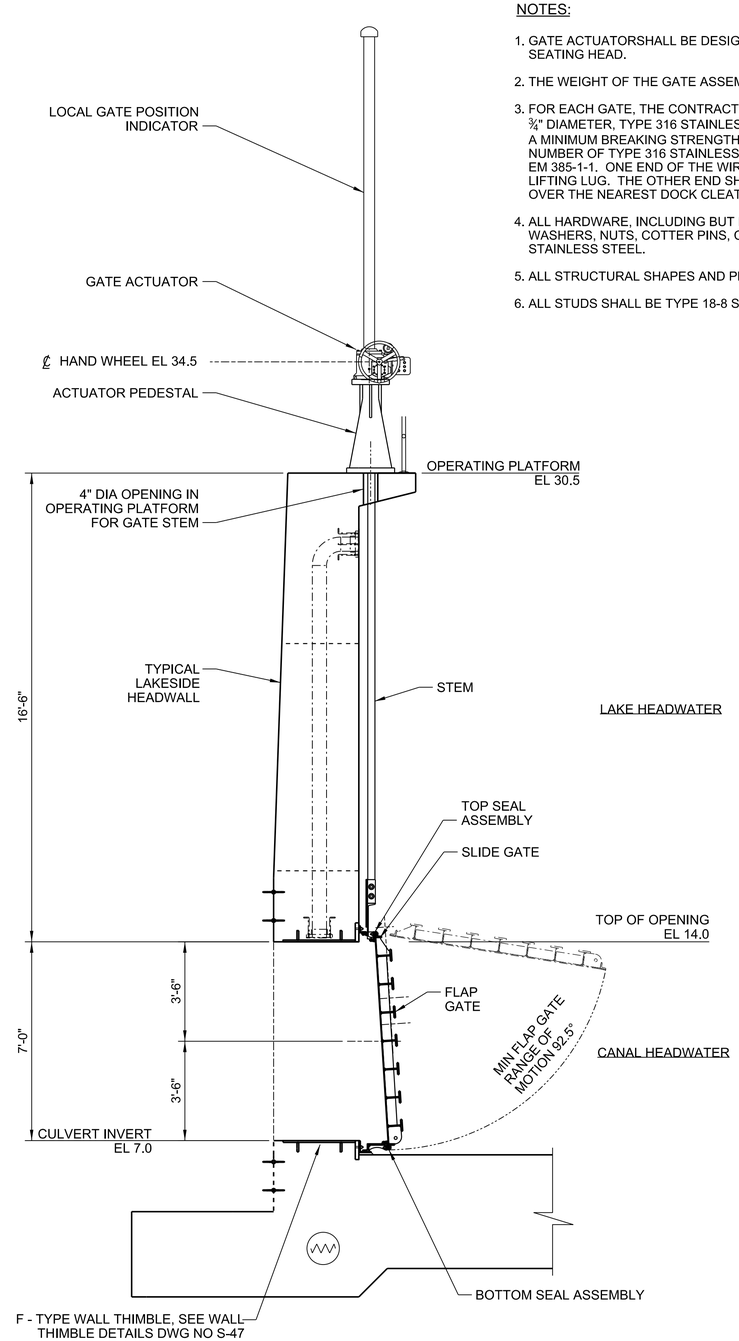

A S-45 **SECTION**
SCALE: A

NOTES:

1. GATE ACTUATORSHALL BE DESIGNED FOR A 10ft UNSEATING HEAD AND A 16ft SEATING HEAD.
2. THE WEIGHT OF THE GATE ASSEMBLY IS APPROXIMATELY 4,500 POUNDS.
3. FOR EACH GATE, THE CONTRACTOR SHALL PROVIDE A 40-FOOT LENGTH OF ¾" DIAMETER, TYPE 316 STAINLESS STEEL WIRE ROPE, CLASS 6x19 IWRC, WITH A MINIMUM BREAKING STRENGTH OF 42,000 POUNDS. PROVIDE AN ADEQUATE NUMBER OF TYPE 316 STAINLESS STEEL WIRE ROPE CLIPS IN ACCORDANCE WITH EM 385-1-1. ONE END OF THE WIRE ROPE SHALL BE SECURED TO EACH FLAP GATE'S LIFTING LUG. THE OTHER END SHALL HAVE A 12-INCH LONG EYE LOOP PLACED OVER THE NEAREST DOCK CLEAT AT THE TOP OF THE OPERATING PLATFORM.
4. ALL HARDWARE, INCLUDING BUT NOT LIMITED TO BOLTS, FLAT WASHERS, LOCK WASHERS, NUTS, COTTER PINS, CAP SCREWS AND MACHINE SCREWS SHALL BE STAINLESS STEEL.
5. ALL STRUCTURAL SHAPES AND PLATES SHALL BE TYPE 304L OR TYPE 316L STAINLESS STEEL.
6. ALL STUDS SHALL BE TYPE 18-8 STAINLESS STEEL.

GRAPHIC SCALE
"A" 24" 12" 0 2' 4' 6'

US Army Corps of Engineers
Jacksonville District

No.	SYM	ZONE	DESCRIPTION
N	A	A-N	ABCD...

DEPARTMENT OF THE ARMY
CORPS OF ENGINEERS
JACKSONVILLE DISTRICT
JACKSONVILLE, FLORIDA

DESIGNED BY: C.B.G.	DATE: MARCH 2015
DWN BY: W.E.S.	CKD BY: J.S.F.
SOLICITATION NO.: W912EP-16-R-0010	
SUBMITTED BY: N/A	CONTRACT NO.: N/A
PLOT SCALE: AS SHOWN	PLOT DATE: Apr 25, 2016
FILE NUMBER: N/A	
FILE NAME: 114527-HHDCRIP3-SF545.DGN	

HERBERT HOOVER DIKE REHABILITATION PROJECT
STRUCTURE REPLACEMENTS

S-291 (IP-3) RECONSTRUCTION

STRUCTURAL

84"x84" COMBINATION GATE
GATE ASSEMBLY ELEVATION AND SECTIONS

DRAWING NO.
S-45

pw:\\COE-SAJPWP02JAX.saj.ds.usace.army.mil:SAJPW\Documents\C&SF\Herbert Hoover Dike Rehabilitation\03-Culvert Rehabilitation\S-292(IP-1), S-290(IP-2), S-291(IP-3) Culvert Reconstruction\070 - Plans\IP-3\07 Structures\S-45

SAFETY ON THIS JOB DEPENDS ON YOU

NOTES:

1. THE CONTRACTOR IS RESPONSIBLE FOR THE DESIGN AND INSTALLATION OF THE DOUBLE LEAF SLIDE GATES. THE GATES SHALL BE DESIGNED AS A COMPLETE SYSTEM AND SHOULD EMPHASIZE SIMPLE EFFICIENT INSTALLATION.
2. ACTUAL DIMENSIONS TO BE SUPPLIED BY GATE MANUFACTURER.
3. GATE ACTUATOR SHALL BE DESIGNED FOR UNSEATING AND SEATING HEAD OF 11.5ft.
4. ALL HARDWARE, INCLUDING BUT NOT LIMITED TO BOLTS, FLAT WASHERS, LOCK WASHERS, NUTS, COTTER PINS, CAP SCREWS AND MACHINE SCREWS SHALL BE STAINLESS STEEL.
5. ALL STRUCTURAL SHAPES AND PLATES SHALL BE TYPE 304L OR TYPE 316L STAINLESS STEEL.
6. ALL STUDS SHALL BE TYPE 18-8 STAINLESS STEEL.
7. ALL WELDING (INCLUDING QUALIFICATIONS, FABRICATIONS AND INSPECTIONS) SHALL BE IN ACCORDANCE WITH AWSD 01.6.

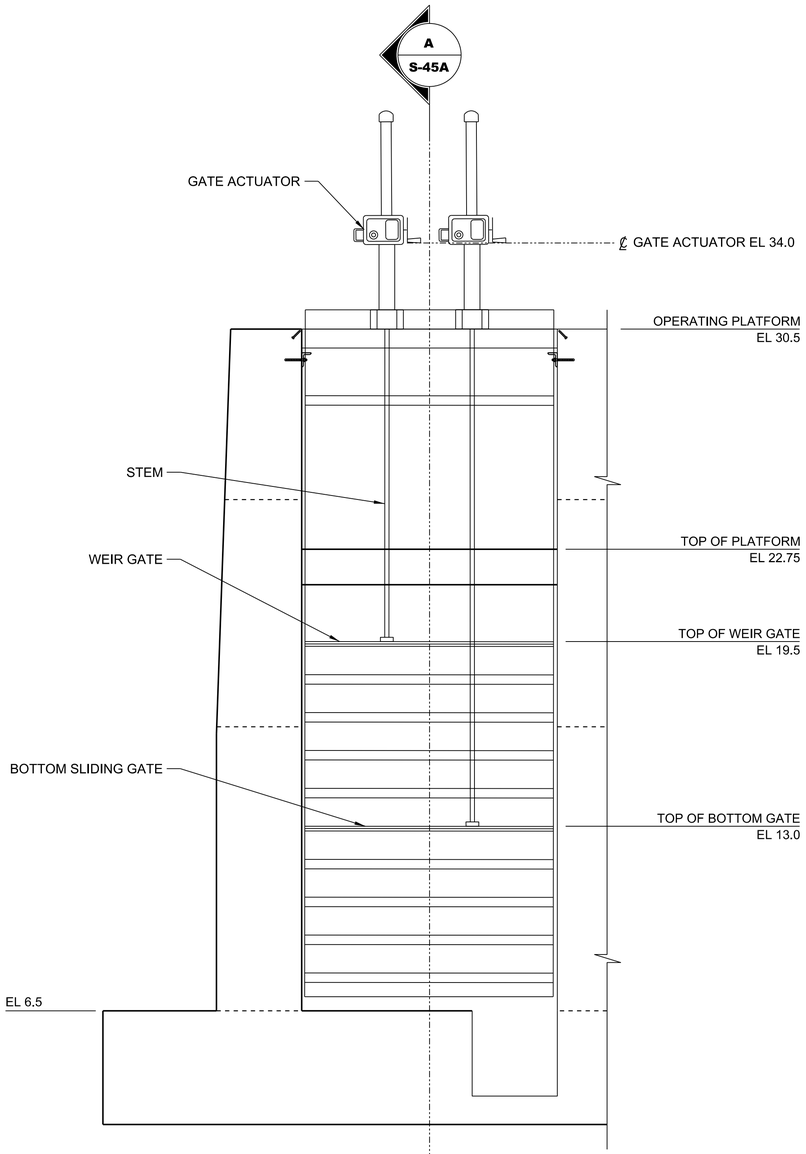

ELEVATION
SCALE: A

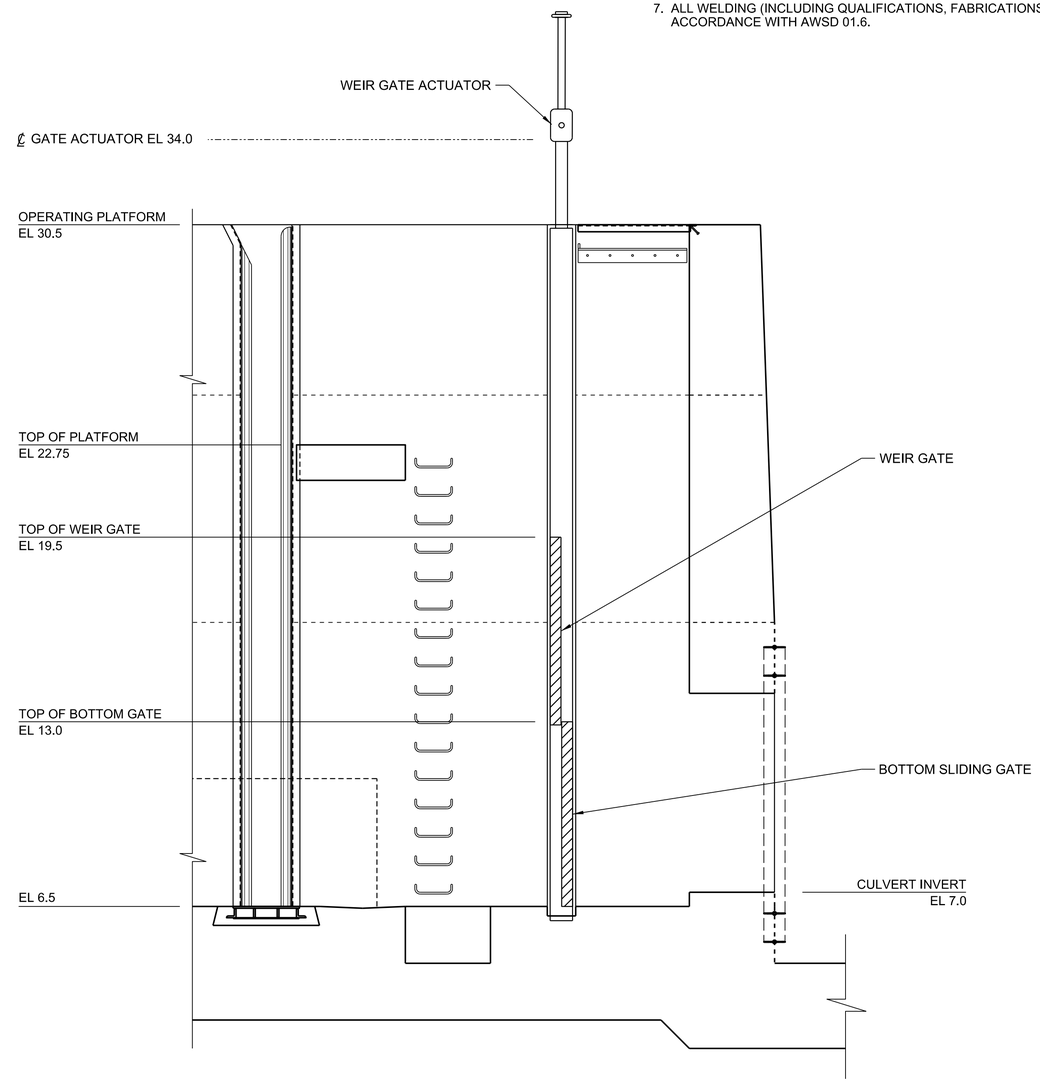

A S-45A **SECTION**
SCALE: A

GRAPHIC SCALE
"A" 24" 12" 0 2' 4' 6'

US Army Corps of Engineers
Jacksonville District

No.	SYM	ZONE	DESCRIPTION
N	A	A-N	ABCD...

DEPARTMENT OF THE ARMY
CORPS OF ENGINEERS
JACKSONVILLE DISTRICT
JACKSONVILLE, FLORIDA

DESIGNED BY: C.B.G.
DATE: MARCH 2015
DWN BY: W.E.S.
CKD BY: J.S.F.
SOLICITATION NO.: W912EP-16-R-0010
SUBMITTED BY: N/A
CONTRACT NO.: N/A
PLOT SCALE: AS SHOWN
PLOT DATE: Apr 25, 2016
FILE NUMBER: N/A
FILE NAME: 114527-HHDCRIP3-SF545A.DGN

HERBERT HOOVER DIKE REHABILITATION PROJECT
STRUCTURE REPLACEMENTS
S-291 (IP-3) RECONSTRUCTION
STRUCTURAL
DUAL LEAF GATE
GATE ASSEMBLY ELEVATION AND SECTIONS

DRAWING NO.
S-45A

pw:\\COE-SAJPW\P02JAX.saj.ds.usace.army.mil:SAJPW\Documents\C&SF\Herbert Hoover Dike Rehabilitation\03-Culvert Rehabilitation\S-292(IP-1), S-290(IP-2), S-291(IP-3) Culvert Reconstruction\070 - Plans\IP-3\07 Structures\S-45A

SAFETY ON THIS JOB DEPENDS ON YOU

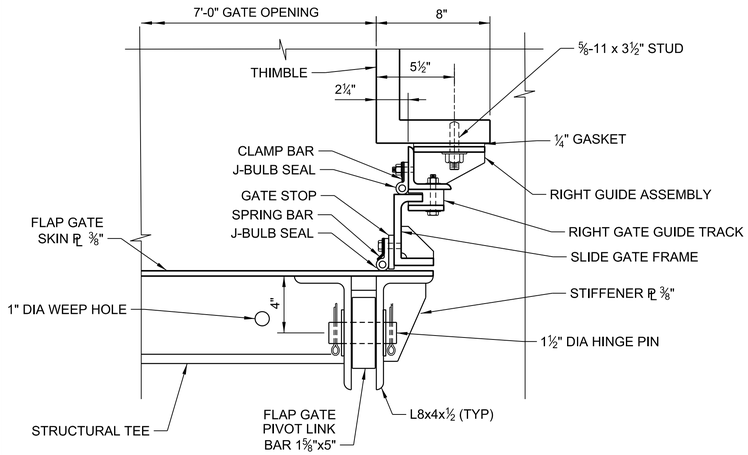

C / S-45 SECTION
SCALE: A

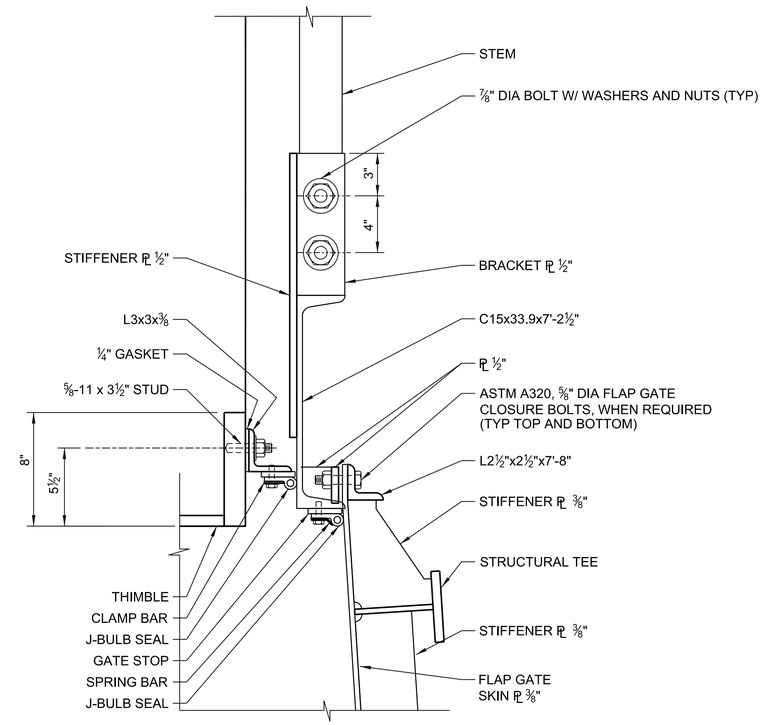

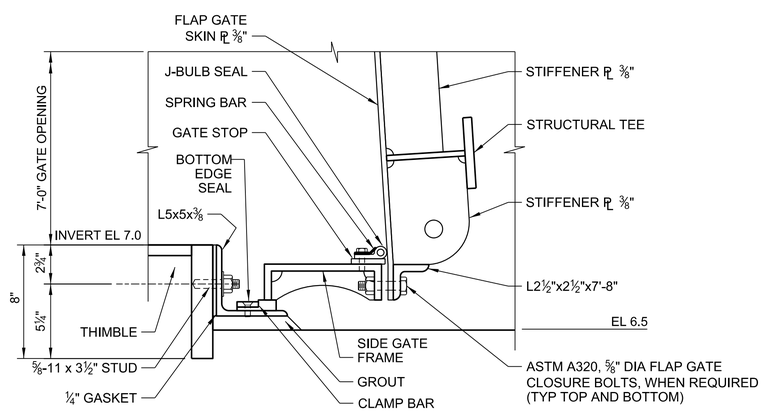

B / S-45 SECTION
SCALE: A

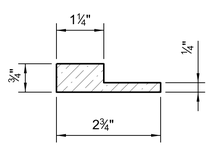

BOTTOM EDGE SEAL DETAIL
SCALE: N.T.S.

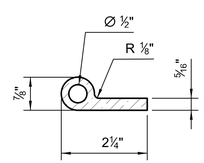

J-BULB SEAL DETAIL
SCALE: N.T.S.

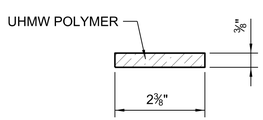

GATE STOP
SCALE: N.T.S.

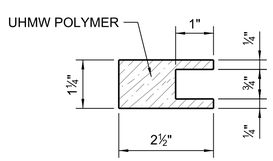

GATE GUIDE TRACK DETAIL
SCALE: N.T.S.

GRAPHIC SCALE
"A" 0 3" 6" 12"

US Army Corps of Engineers
Jacksonville District

No.	STM	ZONE	DESCRIPTION
N	A	A-N	ABCD...

DEPARTMENT OF THE ARMY
CORPS OF ENGINEERS
JACKSONVILLE DISTRICT
JACKSONVILLE, FLORIDA

DESIGNED BY: C.B.G.	DATE: MARCH 2015
DWN BY: W.E.S.	CKD BY: J.S.F.
SOLICITATION NO.: W912EP-16-R-0010	
SUBMITTED BY: N/A	CONTRACT NO.: N/A
PLOT SCALE: AS SHOWN	PLOT DATE: Apr 25, 2016
FILE NUMBER: N/A	
FILE NAME: 114527-HHDCRIP3-SF546.DGN	

HERBERT HOOVER DIKE REHABILITATION PROJECT
STRUCTURE REPLACEMENTS

S-291 (IP-3) RECONSTRUCTION

STRUCTURAL

84"x84" COMBINATION GATE
GATE ASSEMBLY ELEVATION AND SECTIONS

DRAWING NO.
S-46

pw:\\COE-SAJ\PWP02\JAX.saj.ds.usace.army.mil:SAJPW\Documents\C&SF\Herbert Hoover Dike Rehabilitation\03-Culvert Rehabilitation\S-292(IP-1), S-290(IP-2), S-291(IP-3) Culvert Reconstruction\070 - Plans\IP-3\07 Structures\S-46

SAFETY ON THIS JOB DEPENDS ON YOU

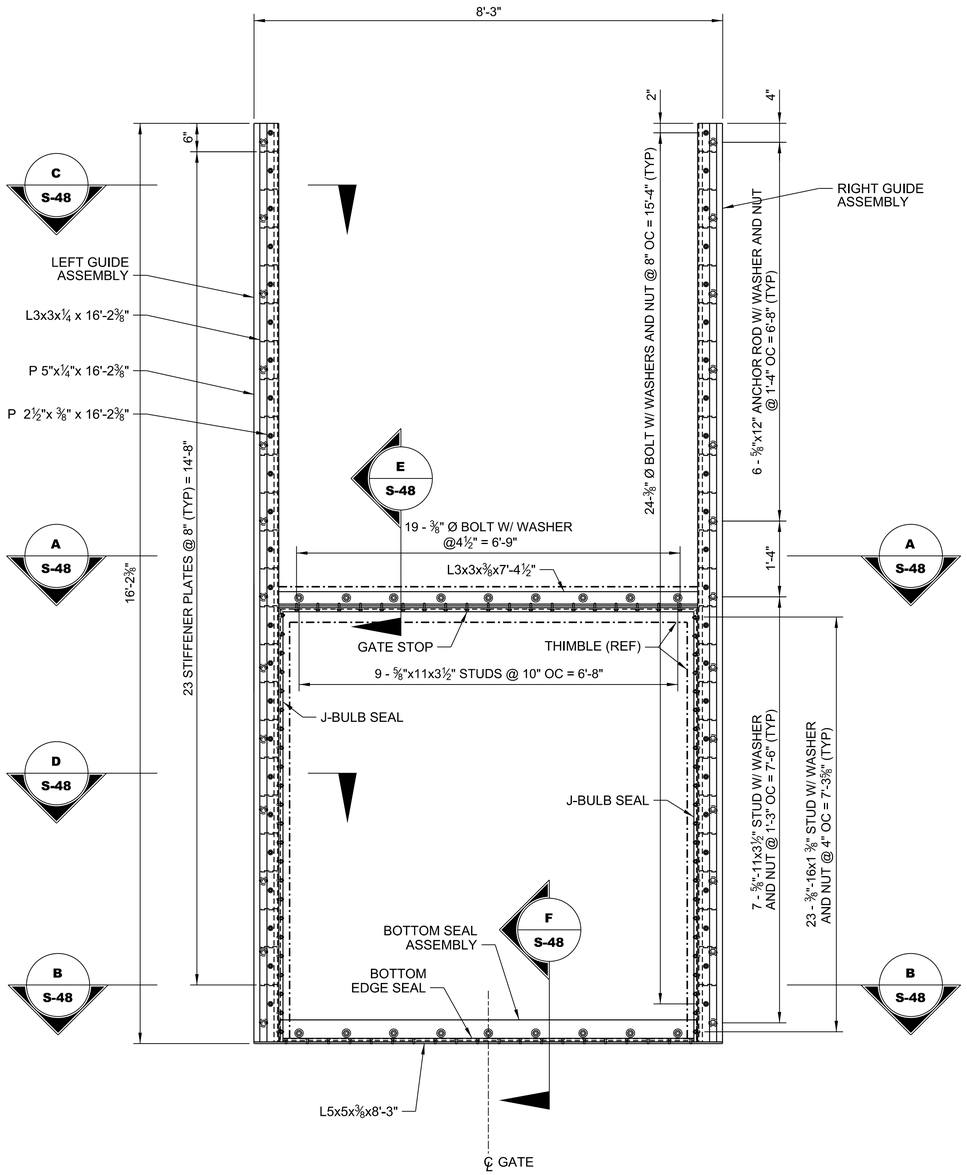

FRONT VIEW
SCALE: A

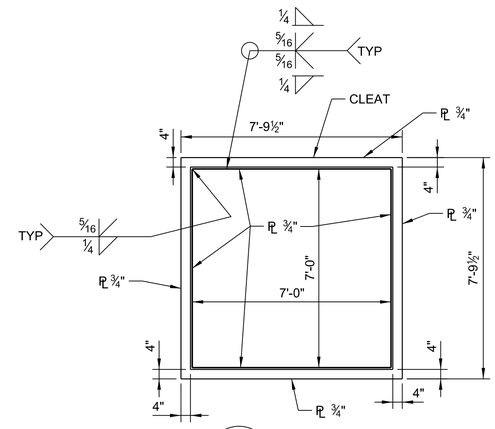

DS S-47 SECTION
SCALE: B

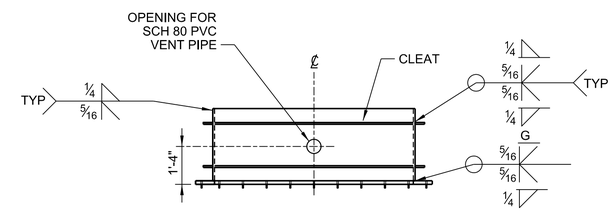

TOP VIEW
SCALE: B

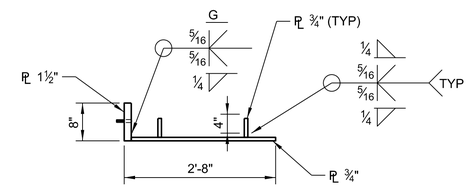

DR S-47 SECTION
SCALE: A

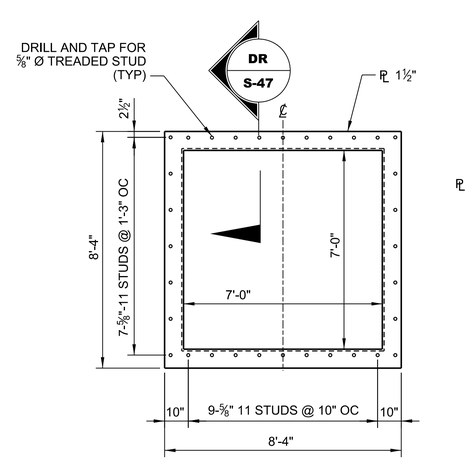

FRONT VIEW
SCALE: B

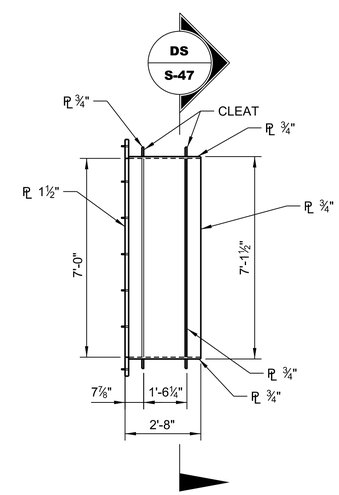

SIDE VIEW
SCALE: B

TYPICAL WALL THIMBLE

GRAPHIC SCALES

"A" 12" 6" 0 1' 2' 3'

"B" 24" 12" 0 2' 4' 6'

US Army Corps of Engineers
Jacksonville District

No.	SYM	ZONE	DESCRIPTION
N	A	A-N	ABCD...

DEPARTMENT OF THE ARMY
CORPS OF ENGINEERS
JACKSONVILLE DISTRICT
JACKSONVILLE, FLORIDA

DESIGNED BY: C.B.G.	DATE: MARCH 2015	
DWN BY: W.E.S.	CKD BY: J.S.F.	SOLICITATION NO.: W912EP-16-R-0010
SUBMITTED BY: N/A	CONTRACT NO.: N/A	
PLOT SCALE: AS SHOWN	PLOT DATE: Apr 25, 2016	FILE NUMBER: N/A
FILE NAME: 114527-HHDRCRIP3-SF547.DGN		

HERBERT HOOVER DIKE REHABILITATION PROJECT
STRUCTURE REPLACEMENTS

S-291 (IP-3) RECONSTRUCTION

STRUCTURAL

84"x84" COMBINATION GATE FRAME ASSEMBLY ELEVATION AND WALL THIMBLE

DRAWING NO.

S-47

pw:\\COE-SAJ\PWP02\JAX.saj.ds.usace.army.mil:SAJPW\Documents\C&SF\Herbert Hoover Dike Rehabilitation\03-Culvert Rehabilitation\S-292(IP-1), S-290(IP-2), S-291(IP-3) Culvert Reconstruction\070 - Plans\IP-3\07 Structures\S-47

SAFETY ON THIS JOB DEPENDS ON YOU

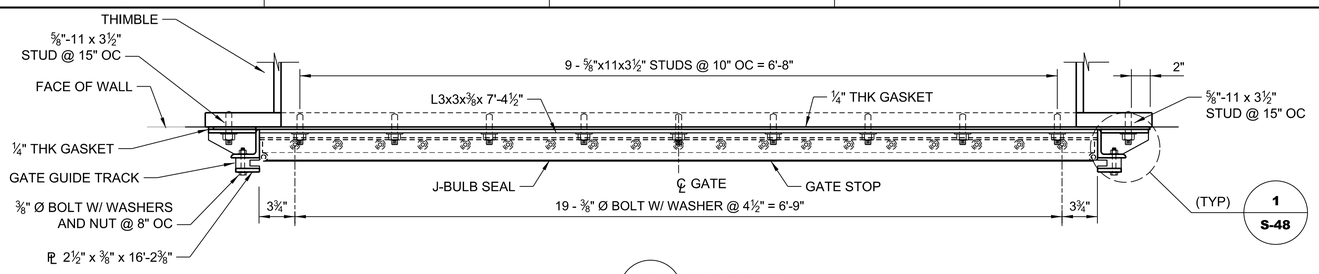

A / S-47 **SECTION**
SCALE: A

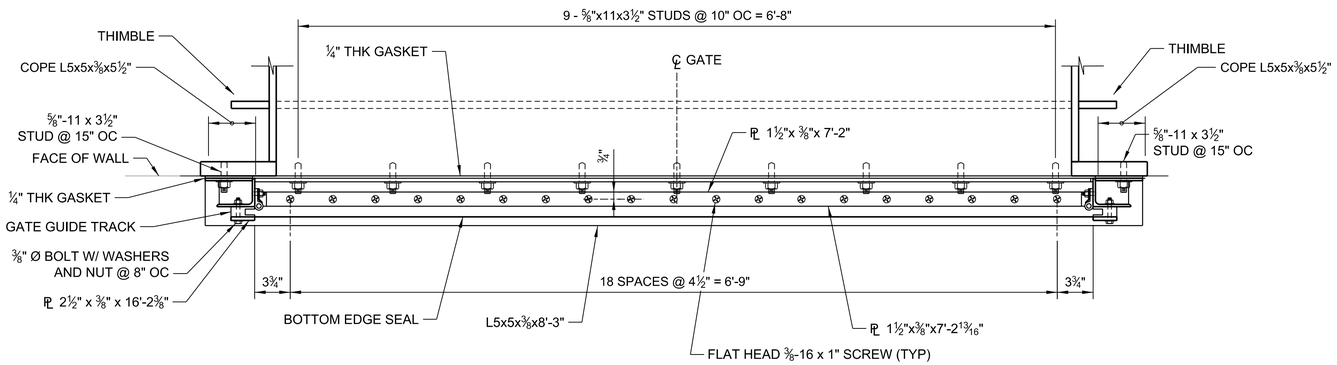

B / S-47 **SECTION**
SCALE: A

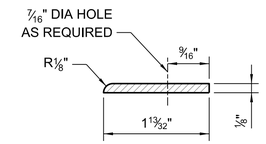

SEAL CLAMP BAR DETAIL
SCALE: N.T.S.
MATERIAL: TYPE 316 STAINLESS STEEL

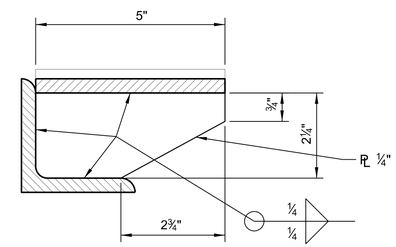

1 / S-48 **DETAIL**
SCALE: C

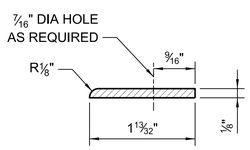

SEAL CLAMP BAR DETAIL
SCALE: N.T.S.

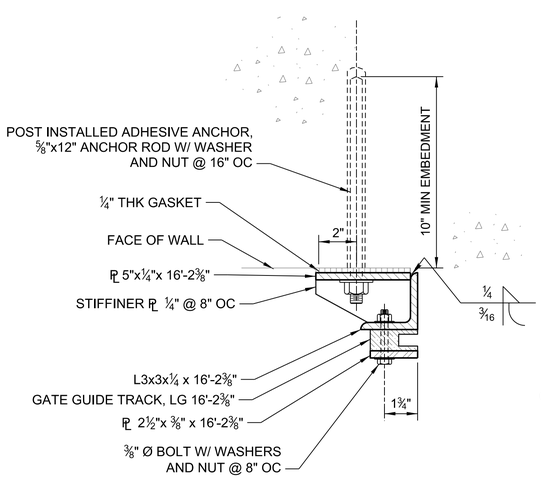

C / S-47 **SECTION**
SCALE: B

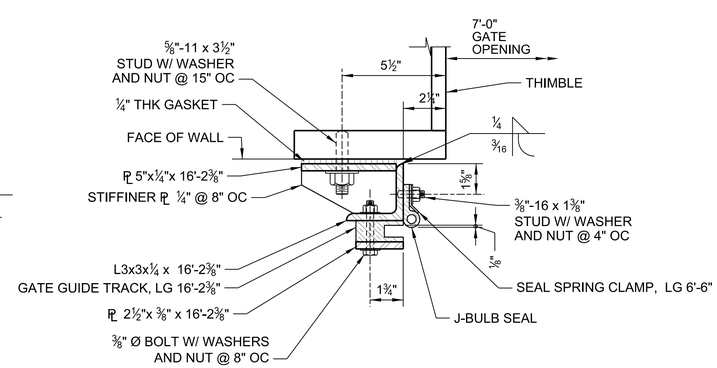

D / S-47 **SECTION**
SCALE: B

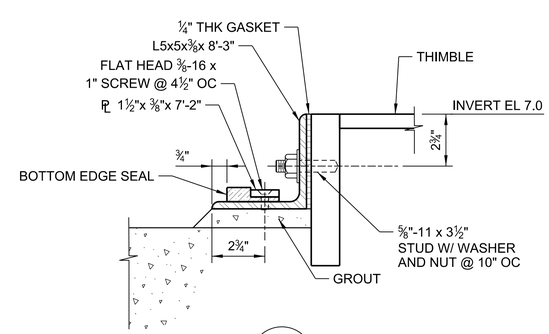

F / S-47 **SECTION**
SCALE: B

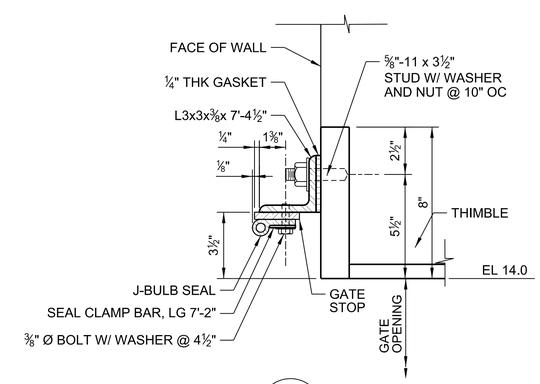

E / S-47 **SECTION**
SCALE: B

GRAPHIC SCALES

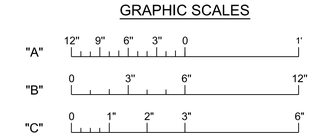

US Army Corps of Engineers
Jacksonville District

No.	SYM	ZONE	DESCRIPTION
N	A	A-N	ABCD...

DEPARTMENT OF THE ARMY
CORPS OF ENGINEERS
JACKSONVILLE DISTRICT
JACKSONVILLE, FLORIDA

DESIGNED BY: C.B.G.
DWN BY: W.E.S.
CKD BY: J.S.F.
SUBMITTED BY: N/A
DATE: MARCH 2015
SOLICITATION NO.: W912EP-16-R-0010
CONTRACT NO.: N/A
PLOT SCALE: AS SHOWN
PLOT DATE: Apr 25, 2016
FILE NUMBER: N/A
FILE NAME: 114527-HHDCRIP3-SF548.DGN

HERBERT HOOVER DIKE REHABILITATION PROJECT
STRUCTURE REPLACEMENTS
S-291 (IP-3) RECONSTRUCTION
STRUCTURAL
84"x84" COMBINATION GATE FRAME ASSEMBLY ELEVATION AND SECTIONS

DRAWING NO.
S-48

pw:\\COE-SAJPW02\JAX.saj.ds.usace.army.mil:SAJPW\Documents\C&SF\Herbert Hoover Dike Rehabilitation\03-Culvert Rehabilitation\S-292(IP-1), S-290(IP-2), S-291(IP-3) Culvert Reconstruction\070 - Plans\IP-3\07 Structures\S-48

SAFETY ON THIS JOB DEPENDS ON YOU

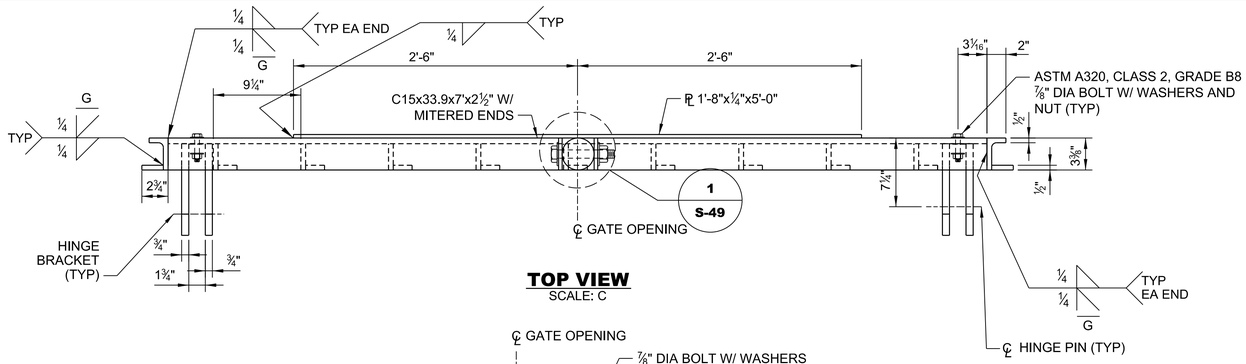

TOP VIEW
SCALE: C

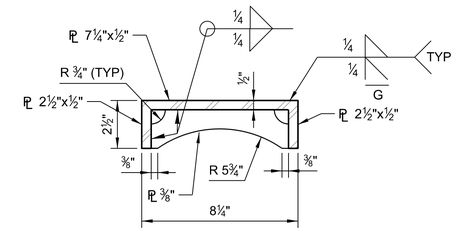

BOTTOM FRAME DETAIL
SCALE: B

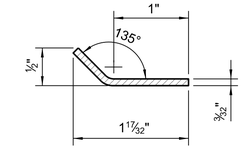

SEAL SPRING CLAMP DETAIL
SCALE: N.T.S.

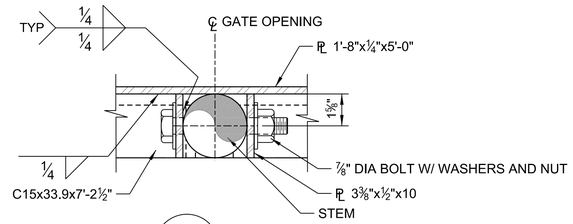

1 S-49 **DETAIL**
SCALE: B

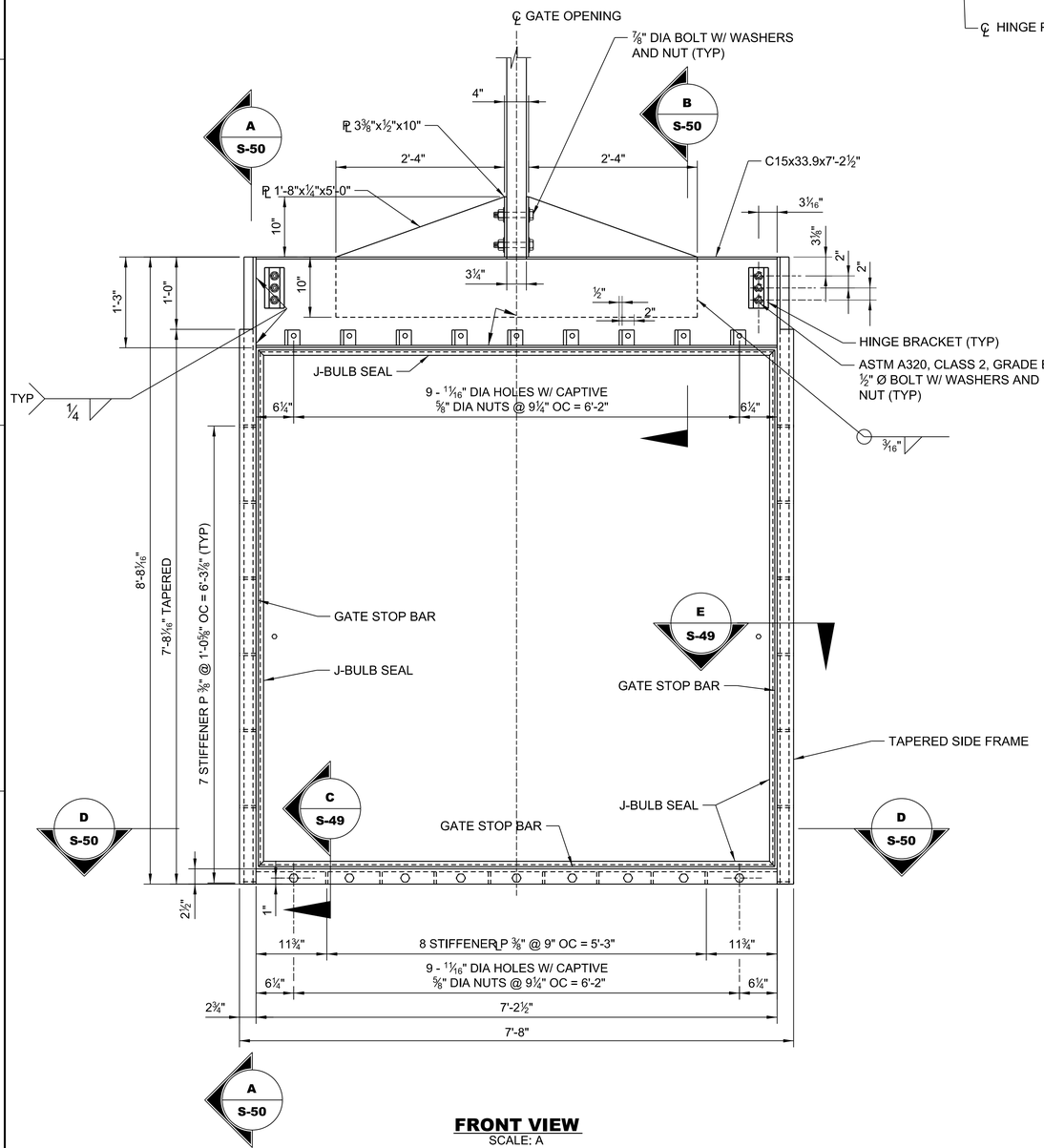

FRONT VIEW
SCALE: A

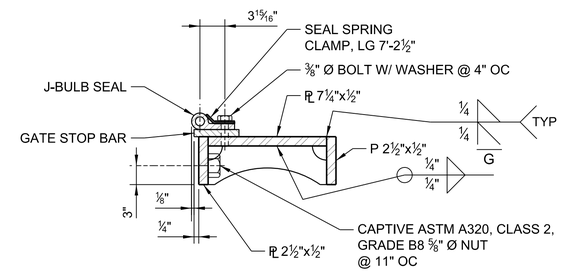

C S-49 **SECTION**
SCALE: B

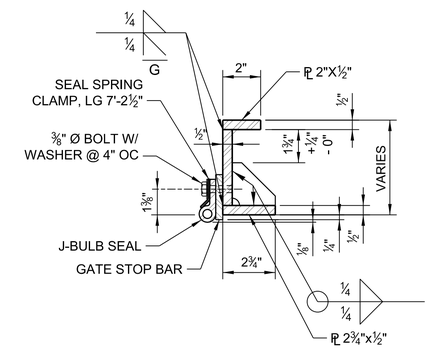

E S-49 **SECTION**
SCALE: B

GRAPHIC SCALES

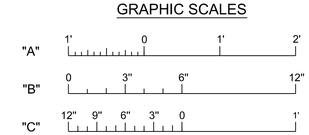

US Army Corps of Engineers
Jacksonville District

No.	STM	ZONE	DESCRIPTION
N	A-N	ABCD...	

DEPARTMENT OF THE ARMY
CORPS OF ENGINEERS
JACKSONVILLE DISTRICT
JACKSONVILLE, FLORIDA

DESIGNED BY: C.B.G.	DATE: MARCH 2015		
DWN BY: W.E.S.	CKD BY: J.S.F.	SOLICITATION NO.: W912EP-16-R-0010	
SUBMITTED BY: N/A		CONTRACT NO.: N/A	
PLOT SCALE: AS SHOWN	PLOT DATE: Apr 25, 2016	FILE NUMBER: N/A	
FILE NAME: 114527-HHDRCRIP3-SF549.DGN			

HERBERT HOOVER DIKE REHABILITATION PROJECT
STRUCTURE REPLACEMENTS

S-291 (IP-3) RECONSTRUCTION

STRUCTURAL

84"x84" COMBINATION GATE
SLIDE GATE ASSEMBLY, ELEVATION AND SECTIONS

DRAWING NO.
S-49

pw:\\COE-SAJPW\P02\JAX.saj.ds.usace.army.mil:SAJPW\Documents\C&SF\Herbert Hoover Dike Rehabilitation\03-Culvert Reconstruction\070 - Plans\IP-3\07 Structures\S-49

SAFETY ON THIS JOB DEPENDS ON YOU

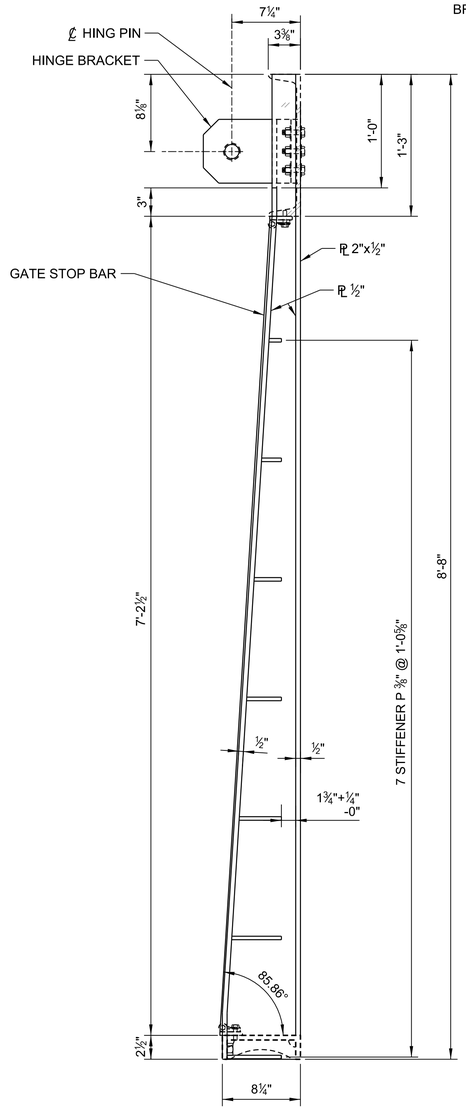

SIDE VIEW
SCALE: B

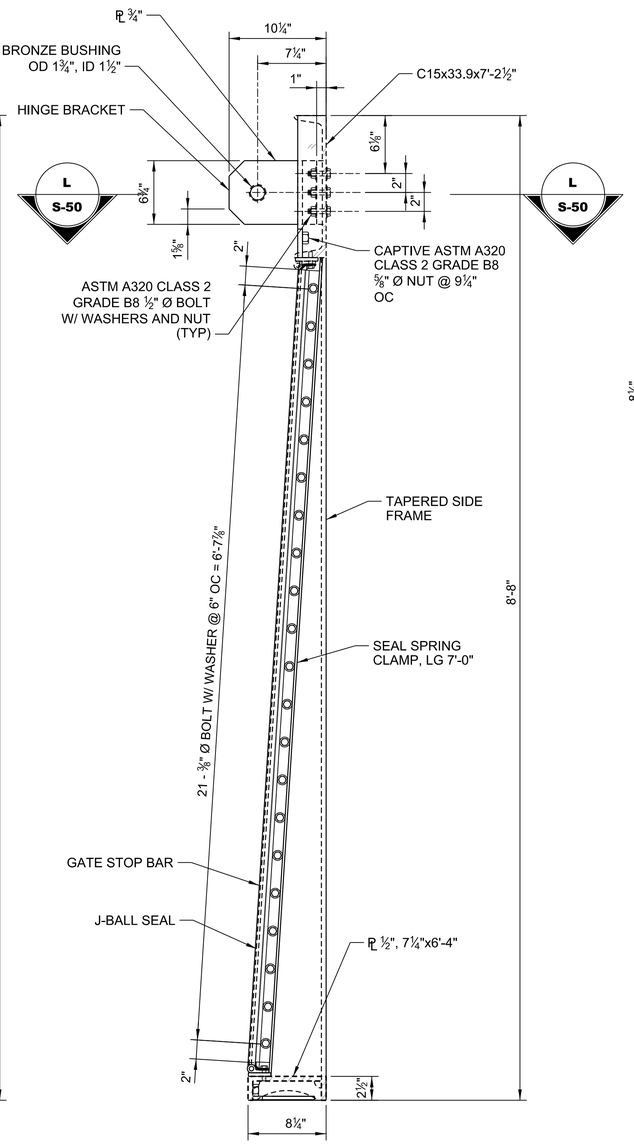

A S-49 SECTION
SCALE: B

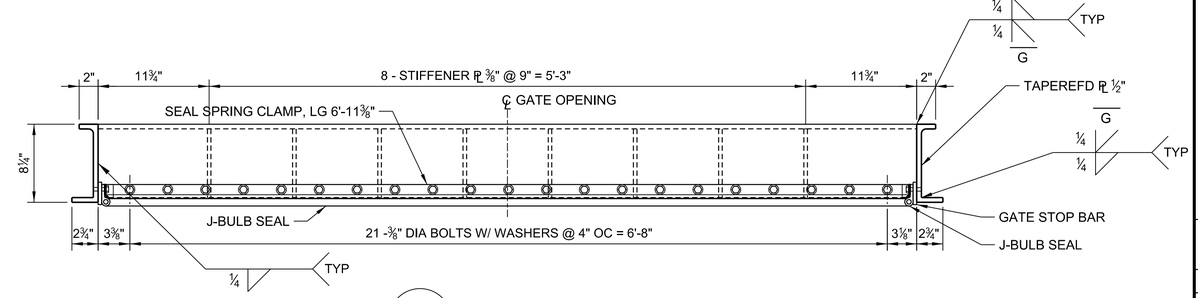

D S-49 SECTION
SCALE: B

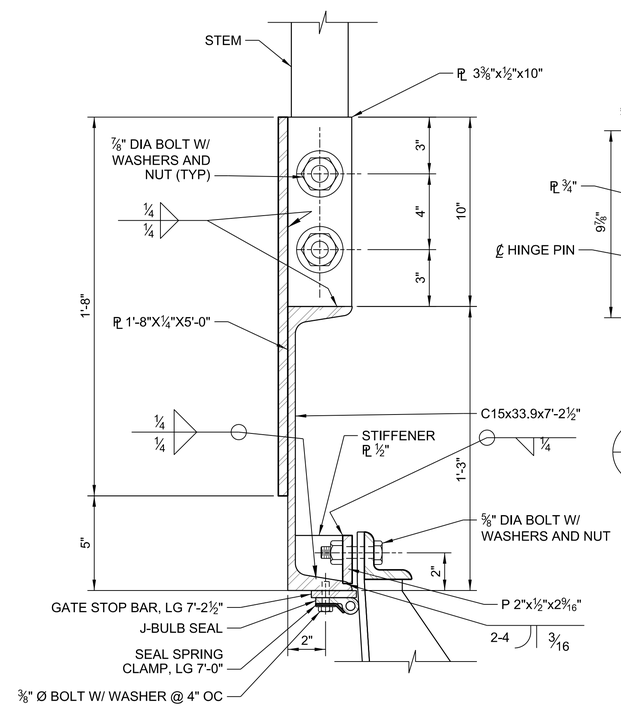

B S-49 SECTION
SCALE: A

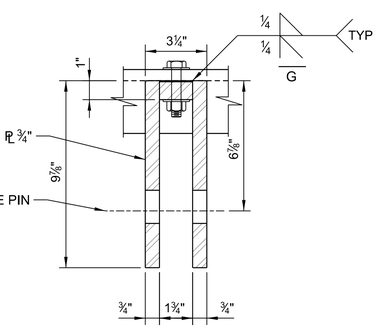

L S-50 SECTION
SCALE: A

GRAPHIC SCALES

"A" 0 3" 6" 12"

"B" 12" 9" 6" 3" 0 1'

US Army Corps of Engineers
Jacksonville District

No.	SYM	ZONE	DESCRIPTION
N	A	A-N	ABCD...

DEPARTMENT OF THE ARMY
CORPS OF ENGINEERS
JACKSONVILLE DISTRICT
JACKSONVILLE, FLORIDA

DESIGNED BY: C.B.G.
DWN BY: W.E.S.
CKD BY: J.S.F.
SUBMITTED BY: N/A
PLOT SCALE: As shown
PLOT DATE: Apr 25, 2014
DATE: MARCH 2015
SOLICITATION NO.: W912EP-16-R-0010
CONTRACT NO.: N/A
FILE NUMBER: N/A
FILE NAME: 114527-HHDCRIP3-SF550.DGN

HERBERT HOOVER DIKE REHABILITATION PROJECT
STRUCTURE REPLACEMENTS

S-291 (IP-3) RECONSTRUCTION

STRUCTURAL

84"x84" COMBINATION GATE
SLIDE GATE ASSEMBLY, ELEVATION AND SECTIONS

DRAWING NO.
S-50

pw:\\COE-SAJ\PWP02\JAX.saj.ds.usace.army.mil:SAJPW\Documents\C&SF\Herbert Hoover Dike Rehabilitation\03-Culvert Rehabilitation\S-292(IP-1), S-290(IP-2), S-291(IP-3) Culvert Reconstruction\070 - Plans\IP-3\07 Structures\S-50

SAFETY ON THIS JOB DEPENDS ON YOU

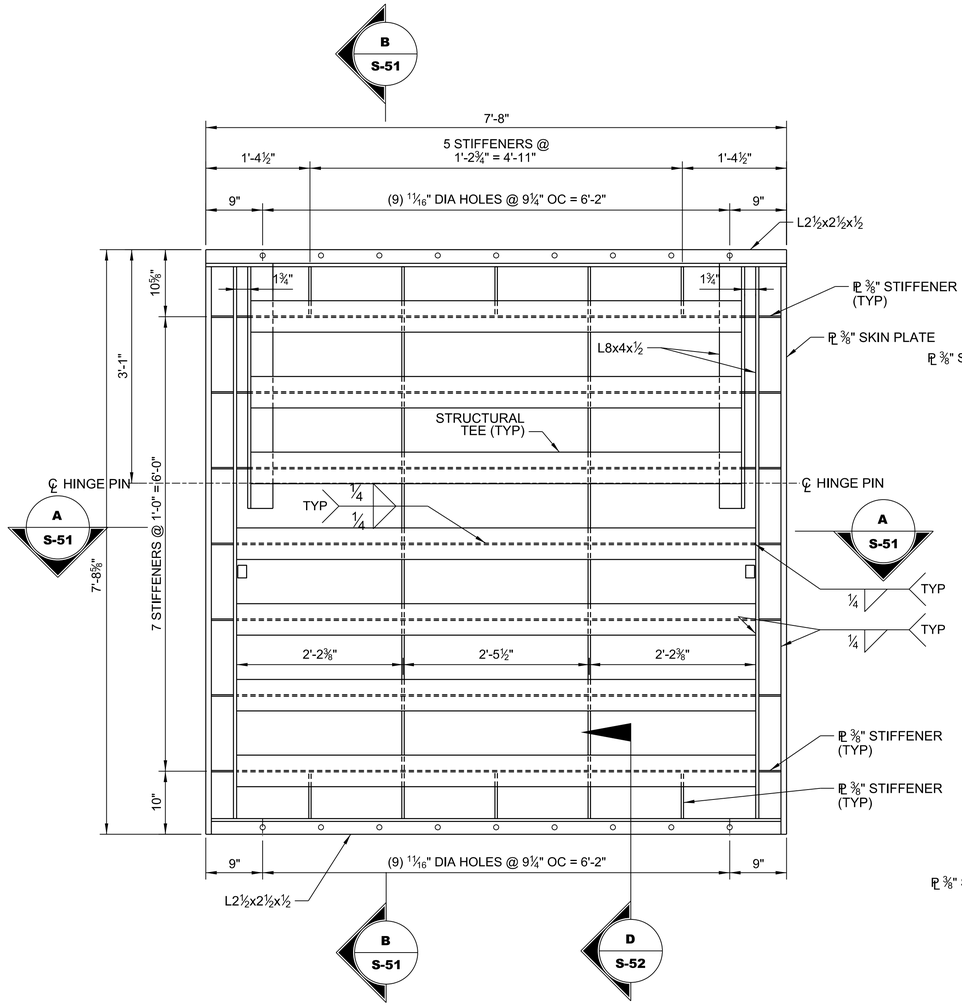

FRONT VIEW
SCALE: A

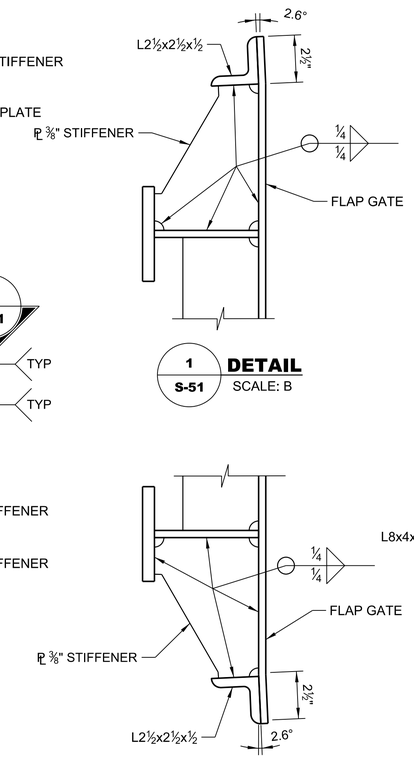

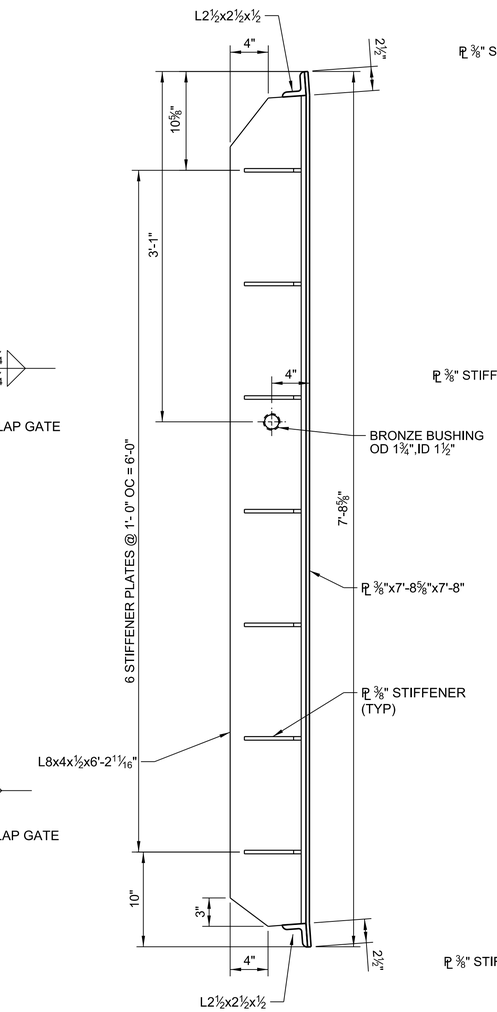

SIDE VIEW
SCALE: C

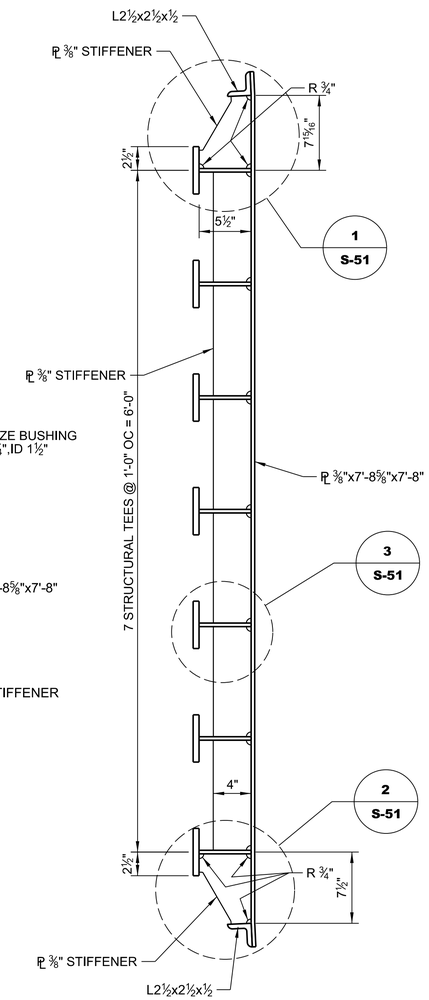

B S-51 **SECTION**
SCALE: C

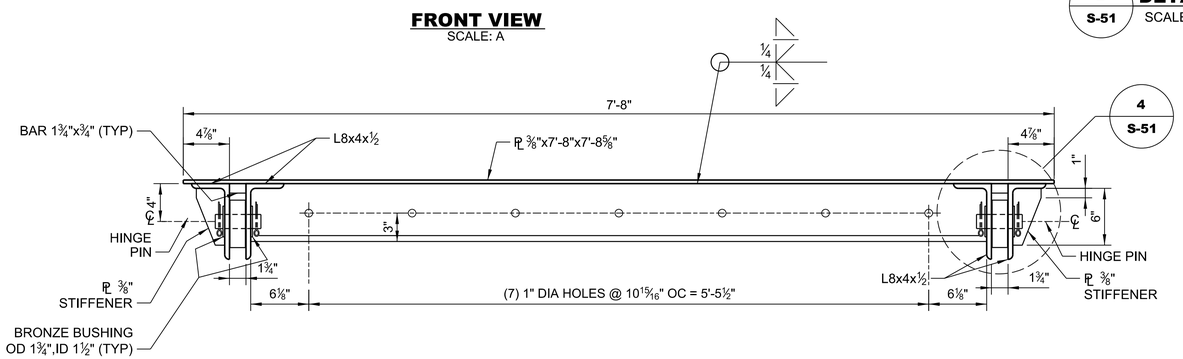

A S-51 **SECTION**
SCALE: C

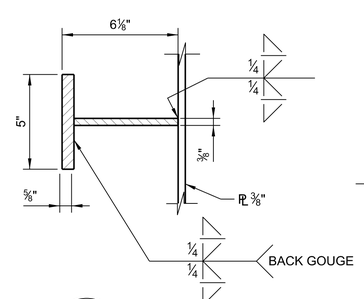

3 S-51 **DETAIL**
SCALE: B

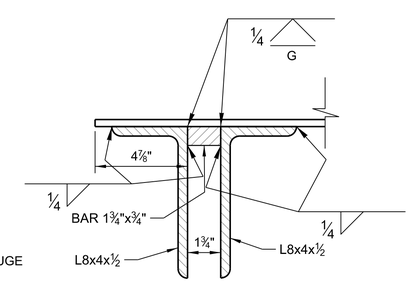

4 S-51 **DETAIL**
SCALE: B

GRAPHIC SCALES

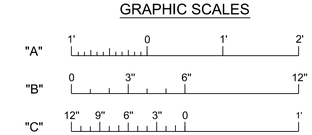

US Army Corps of Engineers
Jacksonville District

No.	SYM	ZONE	DESCRIPTION
N	A	A-N	ABCD...

DEPARTMENT OF THE ARMY
CORPS OF ENGINEERS
JACKSONVILLE DISTRICT
JACKSONVILLE, FLORIDA

DESIGNED BY: C.B.G.	DATE: MARCH 2015
DWN BY: W.E.S.	CKD BY: J.S.F.
SOLICITATION NO.: W912EP-16-R-0010	
SUBMITTED BY: N/A	CONTRACT NO.: N/A
PLOT SCALE: AS SHOWN	PLOT DATE: Apr 25, 2016
FILE NUMBER: N/A	
FILE NAME: 114527-HHDRCRIP3-SF551.DGN	

HERBERT HOOVER DIKE REHABILITATION PROJECT
STRUCTURE REPLACEMENTS

S-291 (IP-3) RECONSTRUCTION

STRUCTURAL

84"x84" COMBINATION GATE FLAP GATE ASSEMBLY

DRAWING NO.
S-51

pw:\\COE-SAJPW02\JAX.saj.ds.usace.army.mil:SAJPW\Documents\C&SF\Herbert Hoover Dike Rehabilitation\03-Culvert Rehabilitation\S-292(IP-1), S-290(IP-2), S-291(IP-3) Culvert Reconstruction\070 - Plans\IP-3\07 Structures\S-51

SAFETY ON THIS JOB DEPENDS ON YOU

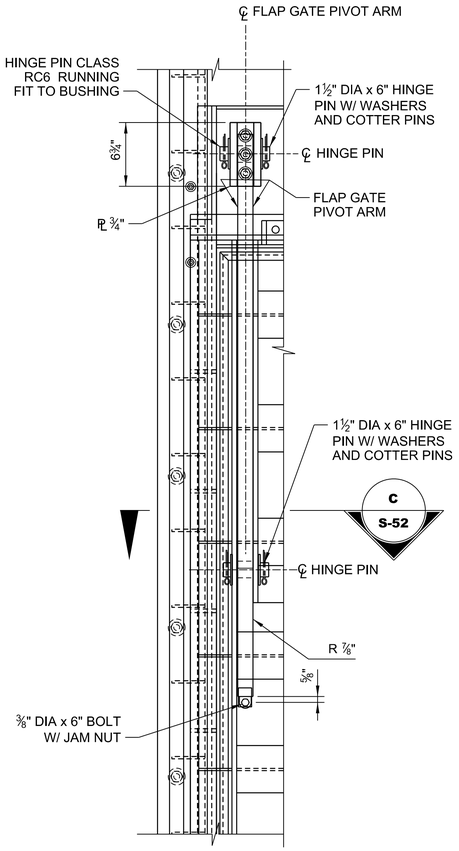

FRONT VIEW
SCALE: C

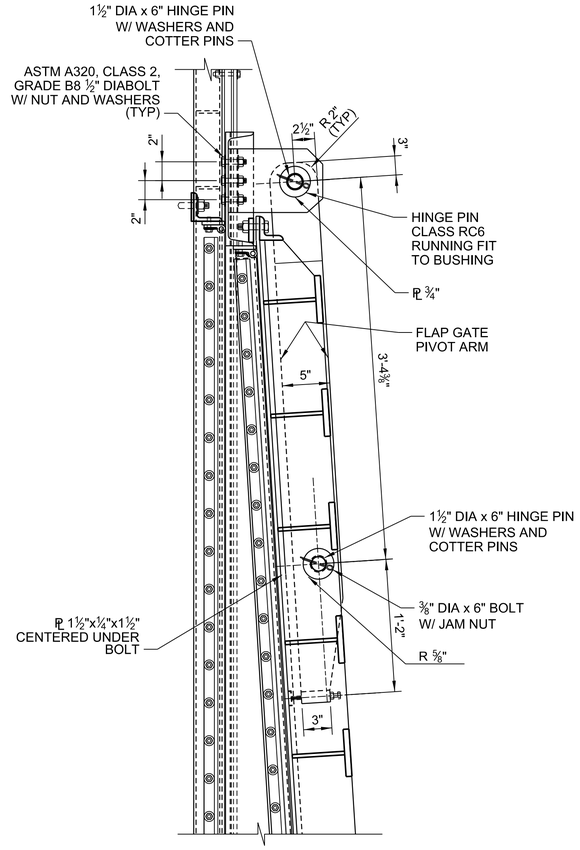

SIDE VIEW
SCALE: C

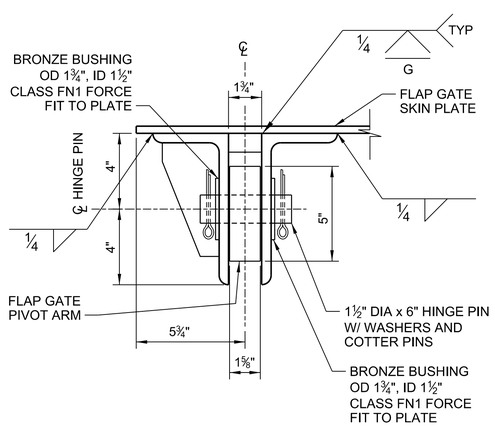

C S-52 SECTION
SCALE: B

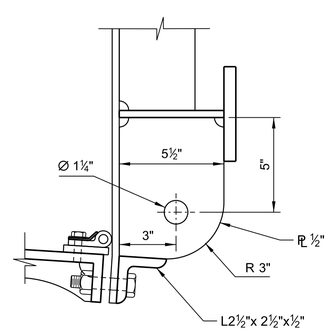

D S-52 SECTION
SCALE: B

NOTES:

1. ONE FLAP GATE PIVOT ARM IS SHOWN ON THE DRAWING, BUT THE GATE ASSEMBLY REQUIRES 2 FLAP GATE PIVOT ARMS.

GRAPHIC SCALES

"B" 0 3" 6" 12"

"C" 12" 9" 6" 3" 0 1'

US Army Corps of Engineers
Jacksonville District

No.	SYM	ZONE	DESCRIPTION
N	A	A-N	ABCD...

DEPARTMENT OF THE ARMY
CORPS OF ENGINEERS
JACKSONVILLE DISTRICT
JACKSONVILLE, FLORIDA

DESIGNED BY: C.B.G.
DWN BY: W.E.S.
CKD BY: J.S.F.
SUBMITTED BY: N/A
PLOT SCALE: AS SHOWN
PLOT DATE: Apr 25, 2014
DATE: MARCH 2015
SOLICITATION NO.: W912EP-16-R-0010
CONTRACT NO.: N/A
FILE NUMBER: N/A
FILE NAME: 114527-HHDRCRIP3-SF552.DGN

HERBERT HOOVER DIKE REHABILITATION PROJECT
STRUCTURE REPLACEMENTS

S-291 (IP-3) RECONSTRUCTION

STRUCTURAL
84"x84" COMBINATION GATE
FLAP GATE PIVOT ARM ASSEMBLY

DRAWING NO.
S-52

pw:\\COE-SAJ\PWP02\JAX.saj.ds.usace.army.mil:SAJPW\Documents\C&SF\Herbert Hoover Dike Rehabilitation\03-Culvert Reconstruction\070 - Plans\IP-3\07 Structures\S-52
pw:\\COE-SAJ\PWP02\JAX.saj.ds.usace.army.mil:SAJPW\Documents\C&SF\Herbert Hoover Dike Rehabilitation\S-292(IP-1), S-290(IP-2), S-291(IP-3) Culvert Reconstruction

SAFETY ON THIS JOB DEPENDS ON YOU

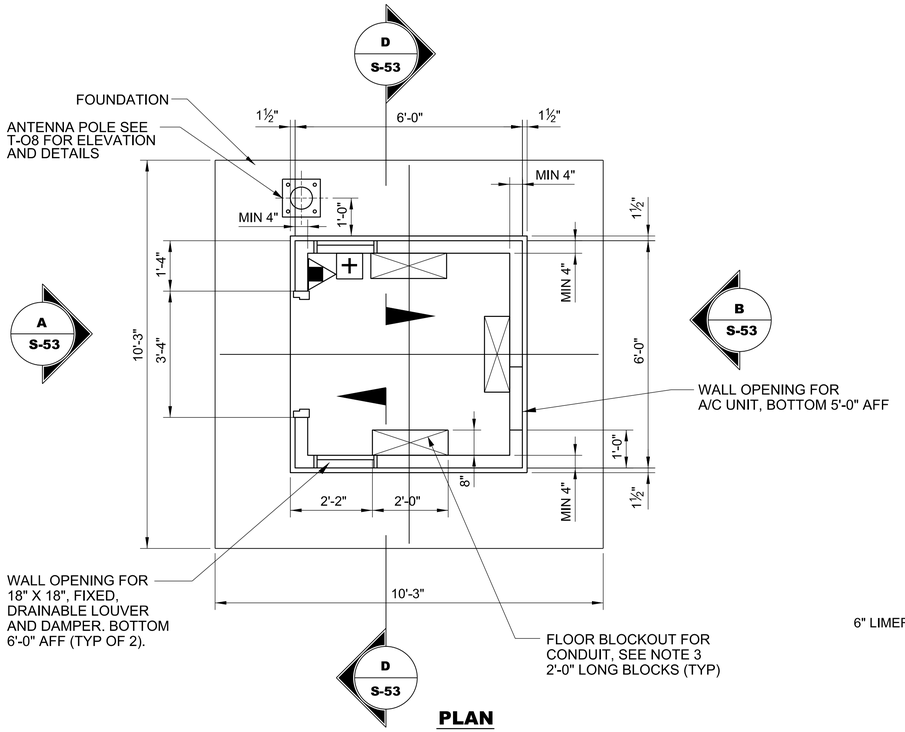

PLAN
SCALE: "A"

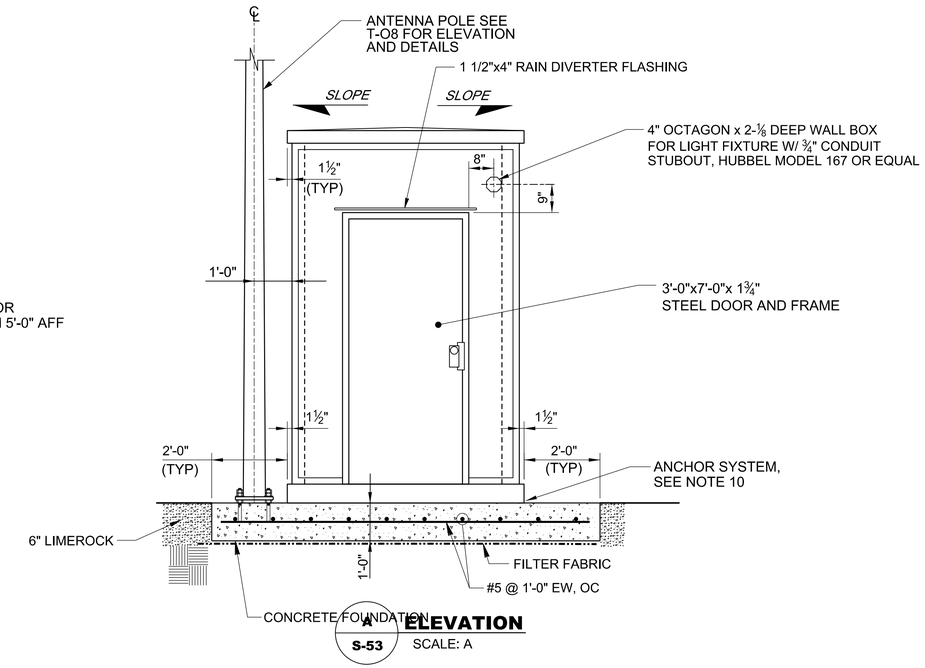

ELEVATION
SCALE: A

NOTES:

1. BUILDING DIMENSIONS ARE NOMINAL. EXACT DIMENSIONS ARE TO BE DETERMINED BY THE BUILDING MANUFACTURER. FOR PRECAST BUILDING REQUIREMENTS, SEE SPECIFICATIONS, SECTION 13 34 23, PRECAST CONCRETE BUILDING.
2. COORDINATE ROUGH OPENING DIMENSIONS FOR, A/C UNIT, LOUVERS AND DOORS WITH MANUFACTURERS.
3. FOR CONTROL BUILDING ELECTRICAL FLOOR PLAN SEE DWG NO. E-04.
4. ALUMINUM IN CONTACT WITH CONCRETE OR STEEL SHALL BE PROTECTED FROM GALVANIC OR CORROSIVE ACTION. FOR COATING DETAILS, REFER TO SPECIFICATION, SECTION 05 50 14, STRUCTURAL METAL FABRICATIONS.
5. CONTRACTOR SHALL PROVIDE AND INSTALL STAINLESS STEEL HOOK AND LATCH HARDWARE TO HOLD DOORS OPEN.
6. PROVIDE 1 FIRE EXTINGUISHER, WALL BRACKETS AND SIGNAGE. FIRE EXTINGUISHERS SHALL BE THE CO2 TYPE UNLESS OTHERWISE NOTED, CAPABLE OF EXTINGUISHING CLASS B AND C HAZARDS. HAVE MINIMUM WEIGHT OF 10 POUNDS AND COMPLIANT WITH UL 299. FIRE EXTINGUISHERS SHALL BE LOCATED AS SHOWN ON THIS DRAWING. TOP OF FIRE EXTINGUISHER SHALL NOT BE LOCATED GREATER THAN FOUR FEET ABOVE FLOOR LEVEL. ONE SIGN SHALL BE LOCATED AT CEILING LEVEL ABOVE TOP OF EACH FIRE EXTINGUISHER. EACH SIGN SHALL READ "FIRE EXTINGUISHER" AND INCLUDE A DOWNWARD POINTING ARROW. SIGNS SHALL BE CONSTRUCTED OF POLYETHYLENE OR ACRYLIC MATERIAL.
7. MINIMUM ROOF THICKNESS SHALL BE 3 1/2 INCHES AND ROOF SLOPE SHALL HAVE A PITCH OF 1 INCH IN 6 FEET.
8. PRECAST CONCRETE FLOOR BLOCKOUTS FOR CONDUIT PENETRATIONS SHALL BE FILLED ON SITE WITH NON-SHRINK GROUT AFTER CONDUIT INSTALLATION IS COMPLETED.
9. CONTRACTOR SHALL FURNISH A FIRST AID KIT FOR THE CONTROL ROOM. FIRST AID KIT SHALL MEET THE REQUIREMENTS OF ANSI Z 308.1-2003, MINIMUM REQUIREMENTS FOR WORKPLACE FIRST AID KITS. FIRST AID KIT SHALL BE WALL MOUNTED, 3'-6" TO 5'-0" ABOVE THE FLOOR.
10. PRECAST BUILDING MANUFACTURER SHALL DESIGN AND PROVIDE ANCHORAGE BETWEEN CONCRETE FOUNDATION AND PRECAST BUILDING.
11. COORDINATE FINAL LOCATION OF THE A/C UNIT WITH MANUFACTURERS.

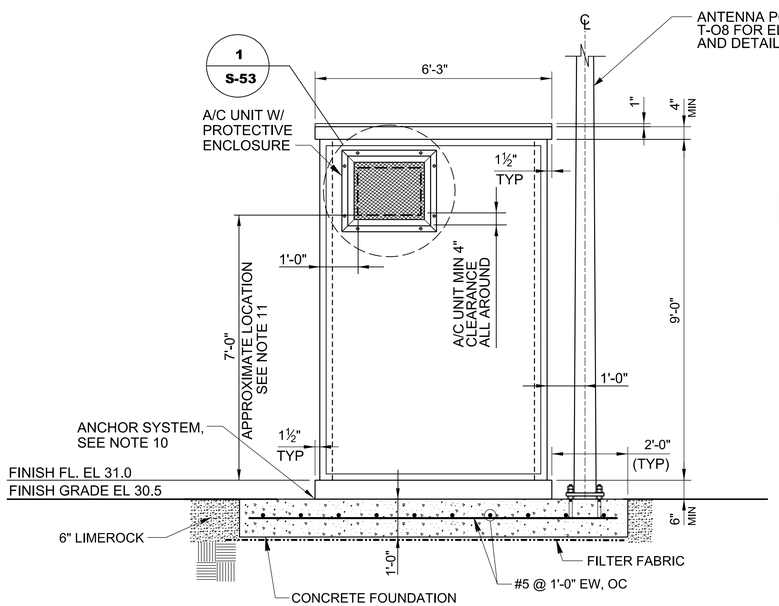

ELEVATION
B S-53 SCALE: A

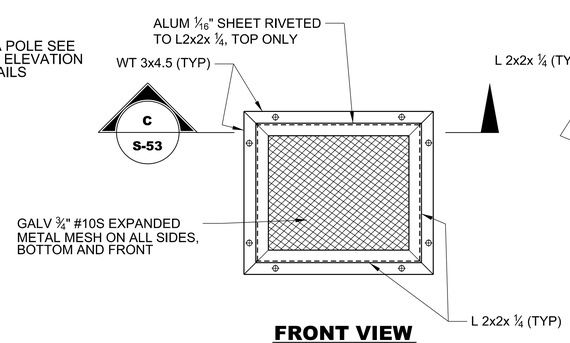

FRONT VIEW

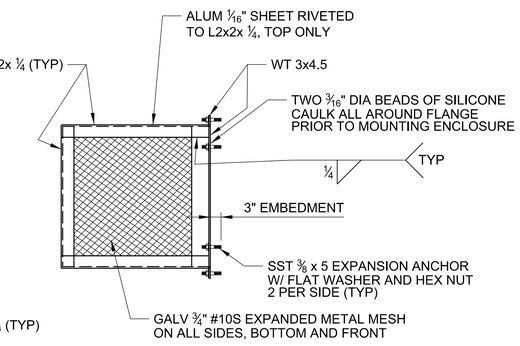

SIDE VIEW

LEGEND:

CO2, FIRE EXTINGUISHER

FIRST AID KIT

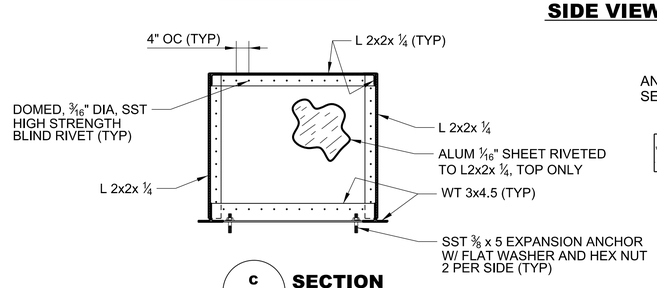

C S-53 **SECTION**
SCALE: A

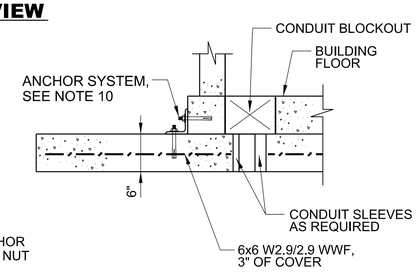

1 S-53 **DETAIL**
SCALE: N.T.S.

D S-53 **SECTION**
SCALE: N.T.S.

GRAPHIC SCALES

"A" 12" 6" 0 1' 2' 3' 4' 5'

US Army Corps of Engineers, Jacksonville District

No.	SYM	ZONE	DESCRIPTION
N	A	A-N	ABCD...

DEPARTMENT OF THE ARMY
CORPS OF ENGINEERS
JACKSONVILLE DISTRICT
JACKSONVILLE, FLORIDA

DESIGNED BY: C.B.G.	DATE: MARCH 2015
DWN BY: W.E.S.	CKD BY: J.S.F.
SOLICITATION NO.: W912EP-16-R-0010	
SUBMITTED BY: N/A	CONTRACT NO.: N/A
PLOT SCALE: AS SHOWN	PLOT DATE: Apr 25, 2016
FILE NUMBER: N/A	
FILE NAME: 114527-HHDRCRIP3-SC253.DGN	

HERBERT HOOVER DIKE REHABILITATION PROJECT
STRUCTURE REPLACEMENTS

S-291 (IP-3) RECONSTRUCTION

STRUCTURAL

TYPICAL CONTROL BUILDING - PLAN AND SECTIONS

DRAWING NO.

S-53

pw:\\COE-SAJ\PWP02\JAX.saj.ds.usace.army.mil:SAJPW\Documents\C&SF\Herbert Hoover Dike Rehabilitation\03-Culvert Rehabilitation\S-292(IP-1), S-290(IP-2), S-291(IP-3) Culvert Reconstruction\070 - Plans\IP-3\07 Structures\S-53

SAFETY ON THIS JOB DEPENDS ON YOU

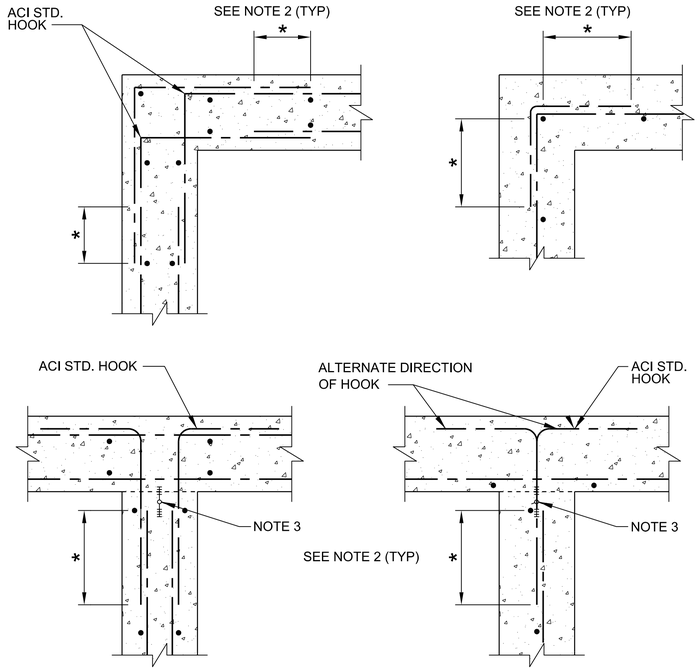

1. USE AT ALL CORNERS FOR ALL CONCRETE MEMBERS INCLUDING THICKENED SLAB ON GRADE, WALLS, CURBS, BEAMS, GRADE BEAMS AND SLABS, UNLESS INDICATED OTHERWISE.
2. * TYPICAL CONCRETE REINFORCEMENT LAP SPLICE PER ACI 318-02.
3. WATERSTOP LOCATION, IF REQUIRED.

1 TYPICAL CORNER BAR DETAILS
SCALE: N.T.S.

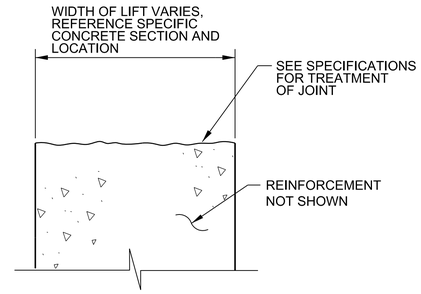

4 TYPICAL HORIZONTAL AND VERTICAL CONSTRUCTION JOINT DETAIL
SCALE: N.T.S.

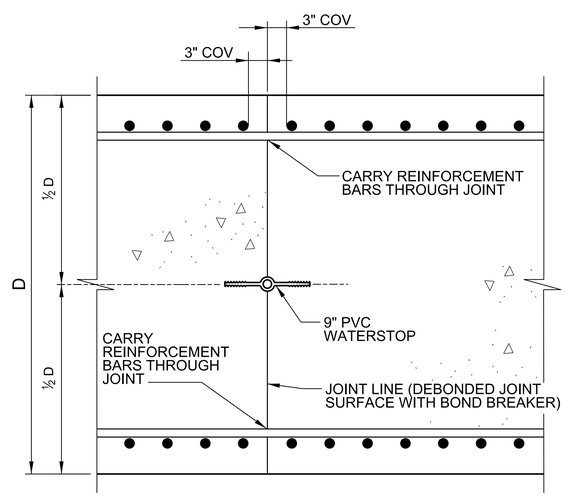

6 VERTICAL CONTROL JOINT
SCALE: N.T.S.

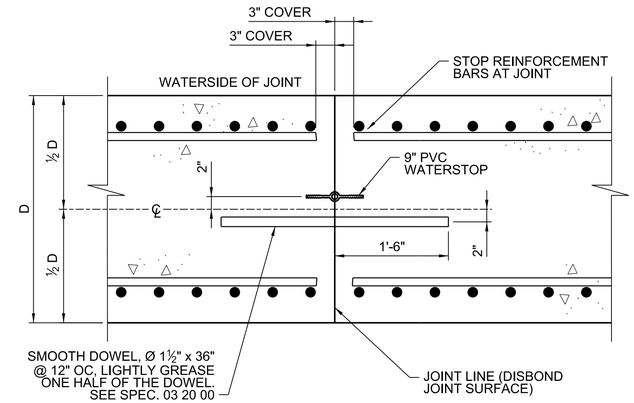

7 TYPICAL DOWELED JOINT
SCALE: N.T.S.

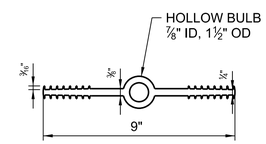

8 TYPICAL 9" PVC WATERSTOP
SCALE: N.T.S.

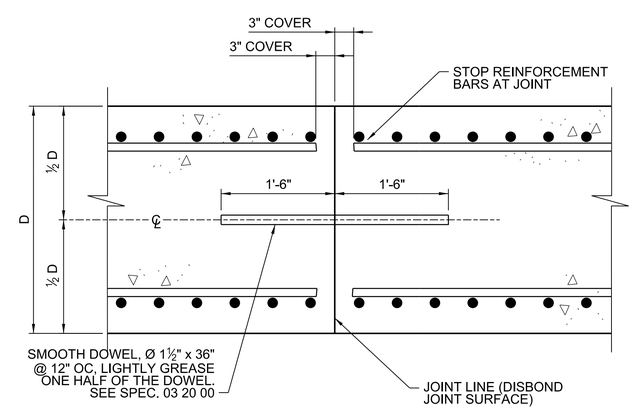

9 TYPICAL DOWELED JOINT
SCALE: N.T.S.

US Army Corps of Engineers, Jacksonville District

No.	STM	ZONE	DESCRIPTION
N	A-N	ABCD...	

DEPARTMENT OF THE ARMY
CORPS OF ENGINEERS
JACKSONVILLE DISTRICT
JACKSONVILLE, FLORIDA

DESIGNED BY: C.B.G.	DATE: MARCH 2015
DWN BY: W.E.S.	CKD BY: J.S.F.
SOLICITATION NO.: W912EP-16-R-0010	
SUBMITTED BY: N/A	CONTRACT NO.: N/A
PLOT SCALE: AS SHOWN	PLOT DATE: Apr 25, 2016
FILE NUMBER: N/A	
FILE NAME: 114527-HHDRCRIP3-SC554.DGN	

HERBERT HOOVER DIKE REHABILITATION PROJECT
STRUCTURE REPLACEMENTS

S-291 (IP-3) RECONSTRUCTION

STRUCTURAL

MISCELLANEOUS CONCRETE DETAILS

DRAWING NO.

S-54

pw:\\COE-SAJPWP02JAX.saj.ds.usace.army.mil:SAJPW\Documents\C&SF\Herbert Hoover Dike Rehabilitation\03-Culvert Rehabilitation\S-292(IP-1), S-290(IP-2), S-291(IP-3) Culvert Reconstruction\070 - Plans\IP-3\07 Structures\S-54

SAFETY ON THIS JOB DEPENDS ON YOU

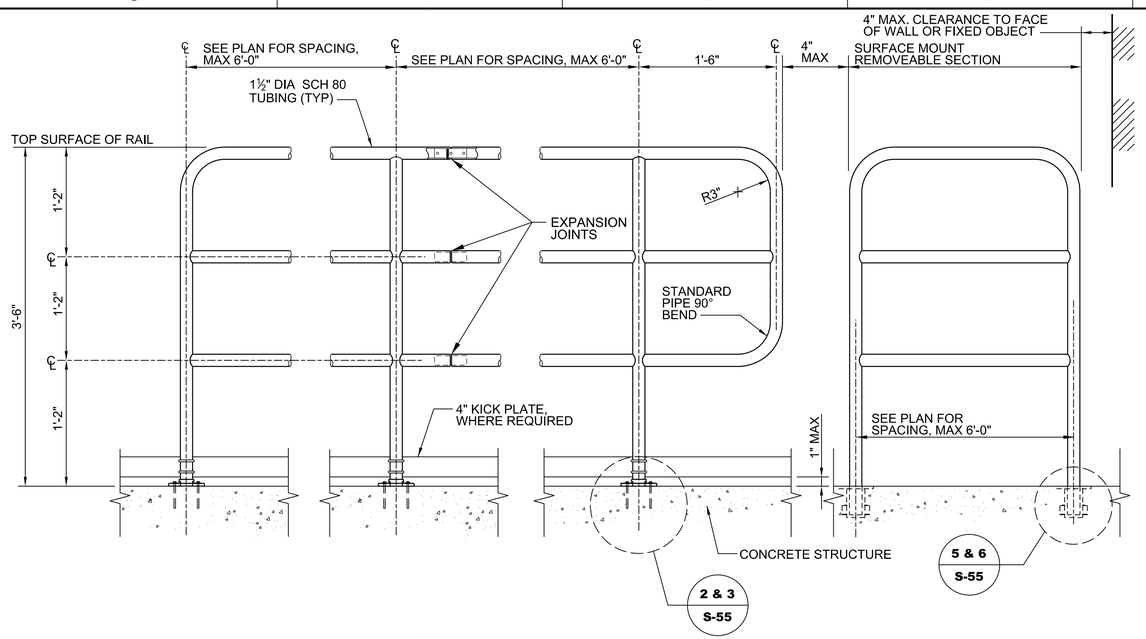

1 TYPICAL HANDRAIL ELEVATION

1 / S-55

SCALE: N.T.S.

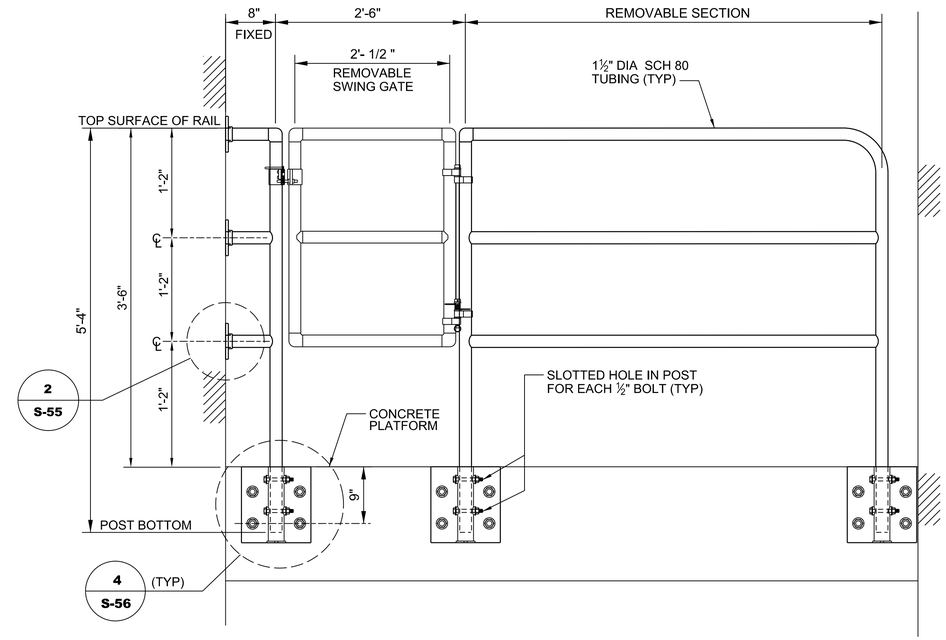

7 TYPICAL SERVICE PLATFORM HANDRAIL ELEVATION

SCALE: N.T.S.

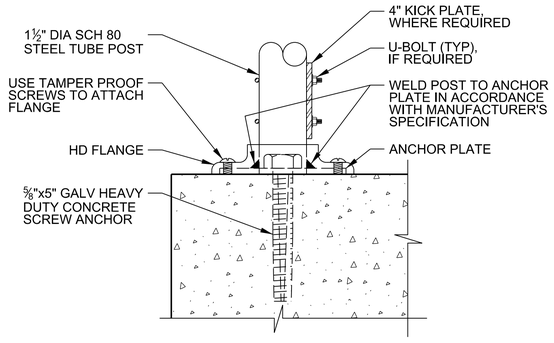

2 FLANGE DETAIL (ELEVATION)

SCALE: N.T.S.

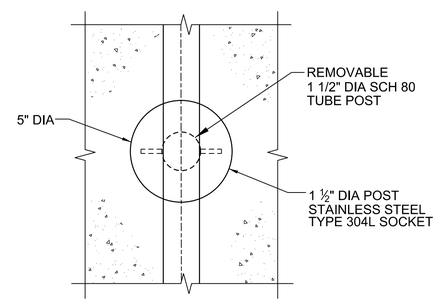

5 SOCKET DETAIL (PLAN)

SCALE: N.T.S.

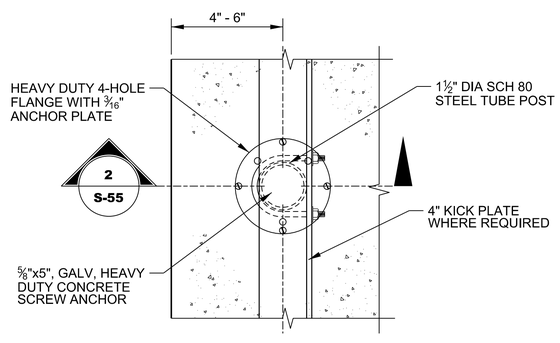

3 FLANGE DETAIL (PLAN)

SCALE: N.T.S.

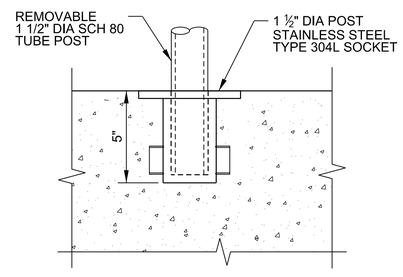

6 SOCKET DETAIL (ELEVATION)

SCALE: N.T.S.

NOTES:

1. COMPONENTS:

A.HANDRAIL AND GUARDS:

1.GALVANIZED STEEL RAILS AND POSTS SHALL BE 1-1/2" DIAMETER SCHEDULE 80 SEAMLESS TUBING.

2.COPE ALL INTERSECTIONS OF RAILS AND POSTS, WELD JOINTS, AND GRIND SMOOTH TO A PLEASING APPEARANCE, TAKING CARE TO NOT REMOVE EXCESSIVE AMOUNTS OF WELDED MATERIALS.

3.BUTT-WELD END-TO-END JOINTS, OR USE WELDING CONNECTIONS.

B.TOEBOARD:

1.TOEBOARD (KICK PLATE), SHALL BE 1/4" X 4" WIDE GALV. STEEL PLATE. SPLICE AT POSTS, PROVIDE SLOTTED HOLES FOR EXPANSION.

2. U-BOLT SHALL BE OF INDICATED SIZE AND DIMENSION.

3. TOEBOARDS (KICK PLATES) SHALL BE PROVIDED, IN ACCORDANCE WITH OSHA 1910.23 (c)(1), WHERE THERE IS A POTENTIAL HAZARD TO PERSONNEL OR EQUIPMENT BELOW THE PLATFORM.

2. INSTALLATION:

A. SPACE POSTS A MAXIMUM OF 6'-0" ON CENTER EXCEPT WHERE OTHERWISE INDICATED.

B. INSTALL HANDRAIL TO WALLS WITH BRACKETS SPACED NOT GREATER THAN 5'-0", EXCEPT WHERE OTHERWISE INDICATED.

C. INSTALL TOEBOARDS (KICK PLATES) AND ANCHOR TO EACH POST WITH CLAMPS AND BOLTS.

D. ALLOW 1/2" INCH SPACE BETWEEN BOTTOM OF KICK PLATE AND TOP OF FLOOR SURFACE.

E. RESILIENT SEAT PADS SHALL BE 1/8" THICK IN ACCORDANCE WITH SECTION 932-2 FDOT SPECIFICATIONS.

F. ALL ACCESS OPENINGS IN HANDRAILS SHALL HAVE AN APPROVED SELF-CLOSING SWING GATE.

G. GAPS BETWEEN HANDRAILS AND FIXED OBJECTS SHALL NOT EXCEED 4".

H. LOCATE SCREW ANCHOR TO AVOID STEEL REINFORCEMENT.

3. GROUNDING SHALL BE PROVIDED.

US Army Corps of Engineers, Jacksonville District

No.	SYM	ZONE	DESCRIPTION
N	A	A-N	ABCD...

DESIGNED BY: C.B.G. | DATE: MARCH 2015
DWN BY: W.E.S. | CKD BY: J.S.F. | SOLICITATION NO.: W912EP-16-R-0010
SUBMITTED BY: N/A | CONTRACT NO.: N/A
PLOT SCALE: N/A | PLOT DATE: Apr 25, 2016 | FILE NUMBER: N/A
FILE NAME: 114527-HHDRCRIP3-SC555.DGN

DEPARTMENT OF THE ARMY
CORPS OF ENGINEERS
JACKSONVILLE DISTRICT
JACKSONVILLE, FLORIDA

HERBERT HOOVER DIKE REHABILITATION PROJECT
STRUCTURE REPLACEMENTS

S-291 (IP-3) RECONSTRUCTION

STRUCTURAL

TYPICAL HANDRAIL DETAILS

DRAWING NO.

S-55

pw:\\COE-SAJ\PW02\JAX.saj.ds.usace.army.mil:SAJ\PW\Documents\C&SF\Herbert Hoover Dike Rehabilitation\03-Culvert Rehabilitation\S-292(IP-1), S-290(IP-2), S-291(IP-3) Culvert Reconstruction\070 - Plans\IP-3\07 Structures\S-55

SAFETY ON THIS JOB DEPENDS ON YOU

PLAN
SCALE: N.T.S.

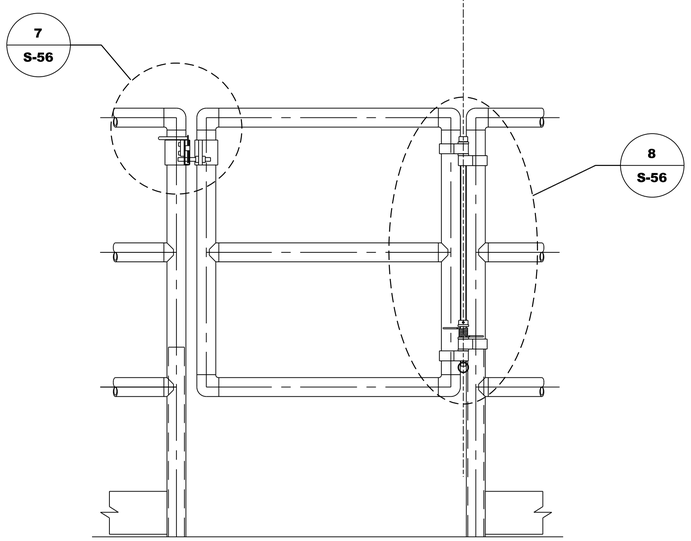

ELEVATION
SCALE: N.T.S.

HANDRAIL SWING GATE
LEFT HAND GATE SHOWN

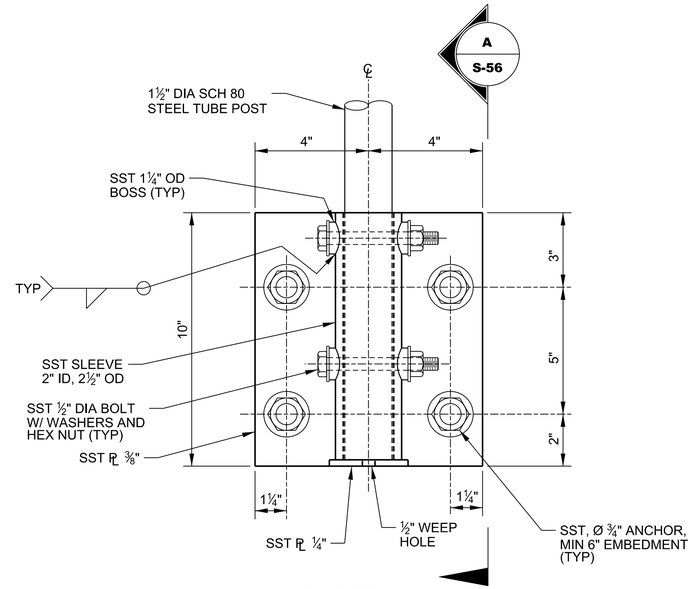

4 / S-55 FLANGE SOCKET DETAIL (ELEVATION)
SCALE: N.T.S.

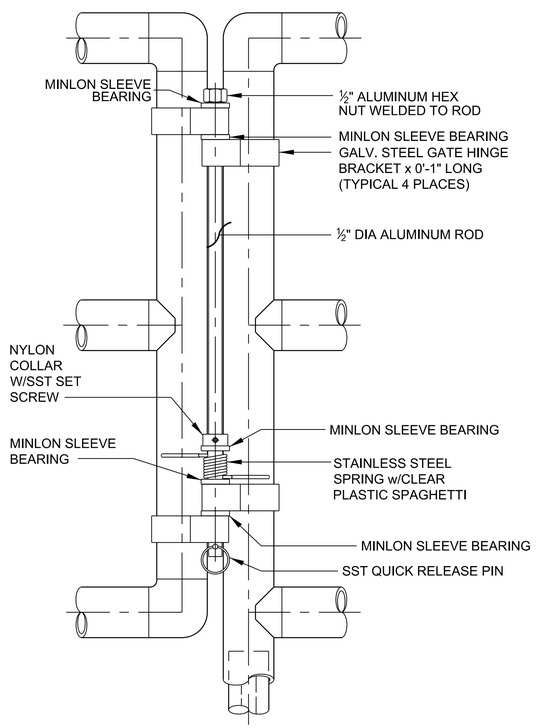

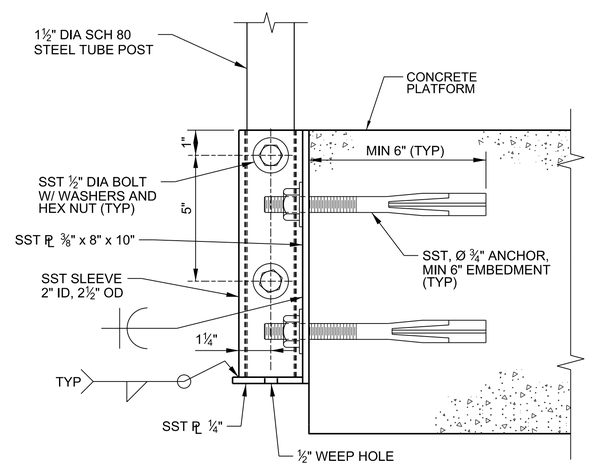

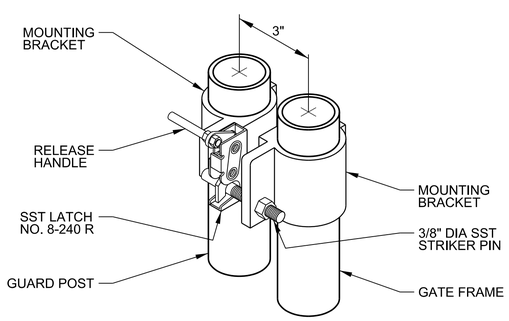

7 / S-56 GATE LATCH DETAIL
SCALE: N.T.S.

8 / S-56 GATE HINGE DETAIL
SCALE: N.T.S.

A / S-56 FLANGE SOCKET (SECTION)
SCALE: N.T.S.

US Army Corps of Engineers
Jacksonville District

No.	SYM	ZONE	DESCRIPTION
N	A	A-N	ABCD...

DEPARTMENT OF THE ARMY
CORPS OF ENGINEERS
JACKSONVILLE DISTRICT
JACKSONVILLE, FLORIDA

DESIGNED BY: C.B.G.	DATE: MARCH 2015
DWN BY: W.E.S.	CKD BY: J.S.F.
SOLICITATION NO.: W912EP-16-R-0010	
SUBMITTED BY: N/A	CONTRACT NO.: N/A
PLOT SCALE: AS SHOWN	PLOT DATE: Apr 25, 2016
FILE NUMBER: N/A	
FILE NAME: 114527-HHDRCRIP3-SC556.DGN	

HERBERT HOOVER DIKE REHABILITATION PROJECT
STRUCTURE REPLACEMENTS

S-291 (IP-3) RECONSTRUCTION

STRUCTURAL

TYPICAL HANDRAIL DETAILS

DRAWING NO.
S-56

pw:\\COE-SAJPWP02JAX.saj.ds.usace.army.mil:SAJPW\Documents\C&SF\Herbert Hoover Dike Rehabilitation\03-Culvert Rehabilitation\S-292(IP-1), S-290(IP-2), S-291(IP-3) Culvert Reconstruction\070 - Plans\IP-3\07 Structures\S-56

SAFETY ON THIS JOB DEPENDS ON YOU

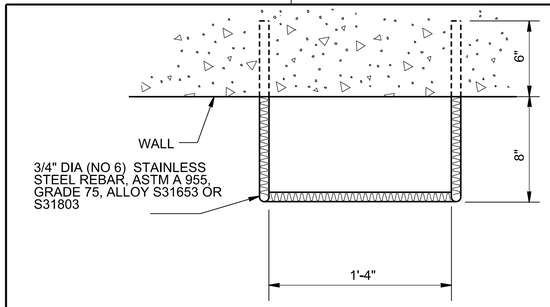

TOP

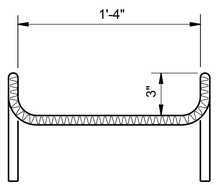

FRONT

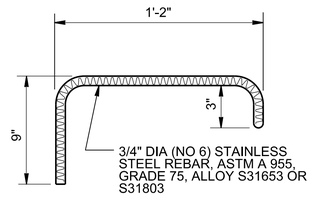

SIDE

1 LADDER RUNG DETAIL

SCALE: N.T.S.

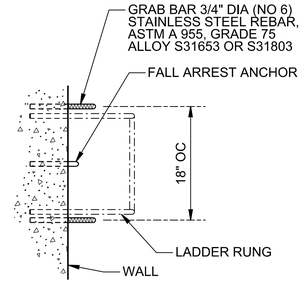

PLAN VIEW

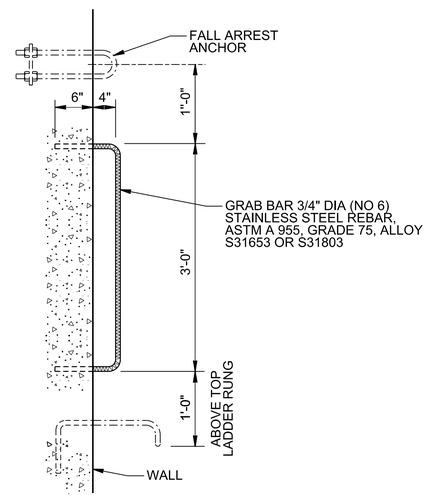

3 LADDER GRAB BAR (PLAN)

SCALE: N.T.S.

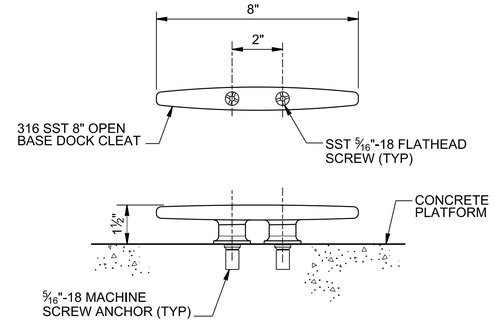

5 O&M TIE-DOWN POINT

SCALE: N.T.S.

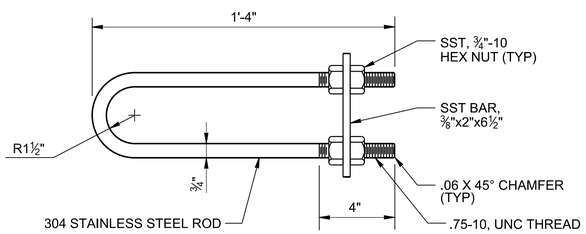

ANCHOR DETAIL

SCALE: NTS

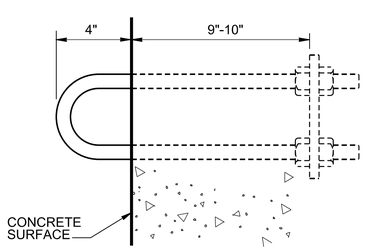

INSTALLATION DETAIL

SCALE: NTS

2 SAFETY FALL ARREST EMBEDED ANCHOR

SCALE: N.T.S.

NOTES:

1. ULTIMATE DESIGN LOAD: 5,000 LBS
2. SAFE WORKING LOAD: 1,000 LBS

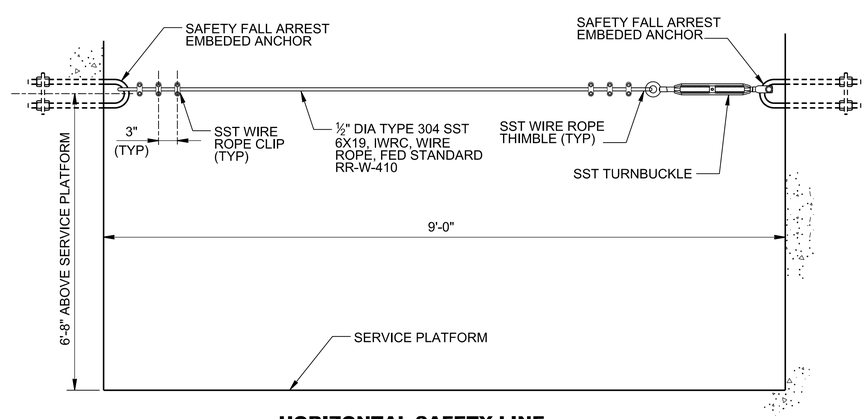

4 HORIZONTAL SAFETY LINE

SCALE: N.T.S.

US Army Corps of Engineers, Jacksonville District

No.	STM	ZONE	DESCRIPTION
N	A	A-N	ABCD...

DEPARTMENT OF THE ARMY
CORPS OF ENGINEERS
JACKSONVILLE DISTRICT
JACKSONVILLE, FLORIDA

DESIGNED BY: C.B.G.
DWN BY: W.E.S.
CKD BY: J.S.F.
SUBMITTED BY: N/A
PLOT SCALE: N/A
PLOT DATE: Apr 25, 2014
DATE: MARCH 2015
SOLICITATION NO.: W912EP-16-R-0010
CONTRACT NO.: N/A
FILE NUMBER: N/A
FILE NAME: 114527-HHDRCRIP3-SC557.DGN

HERBERT HOOVER DIKE REHABILITATION PROJECT
STRUCTURE REPLACEMENTS

S-291 (IP-3) RECONSTRUCTION

STRUCTURAL

RUNG LADDER AND FALL PROTECTION ANCHOR DETAILS

DRAWING NO.

S-57

pw:\\COE-SAJ-PWP02\JAX.saj.ds.usace.army.mil:SAJPW\Documents\C&S\Herbert Hoover Dike Rehabilitation\03-Culvert Reconstruction\070 - Plans\IP-3\07 Structures\S-57

S-291(IP-1), S-290(IP-2), S-291(IP-3) Culvert Reconstruction

SAFETY ON THIS JOB DEPENDS ON YOU

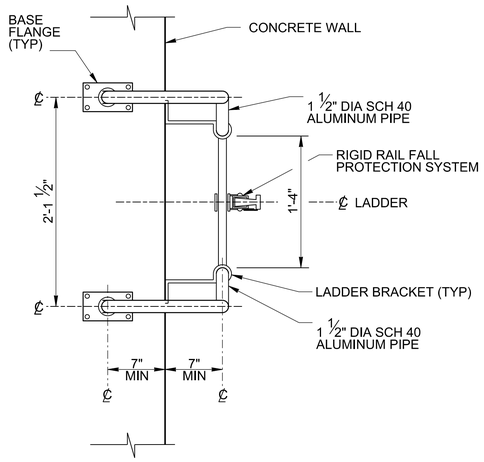

PLAN VIEW

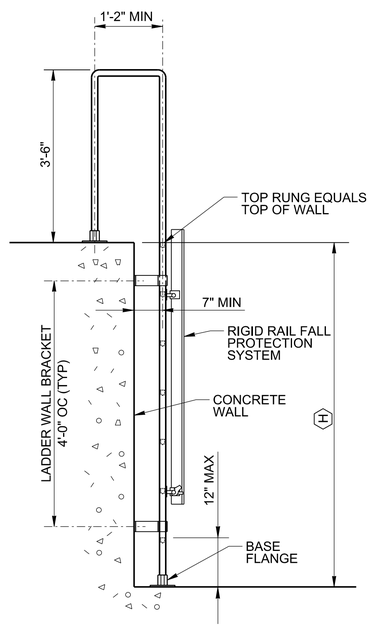

SIDE VIEW

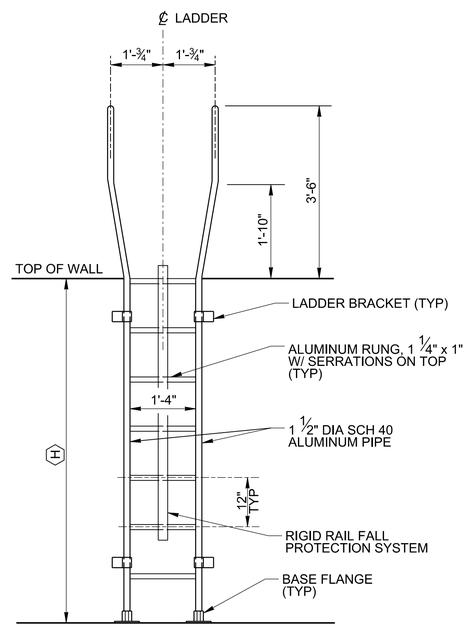

FRONT VIEW

1 VERTICAL LADDER
SCALE: N.T.S.

NOTES:

1. OSHA REGULATION, 29 CFR 1910.27, FIXED LADDERS IS APPLICABLE.
2. PROVIDE ALUMINUM LADDERS WITH STANDARD MILL FINISH.
3. USE ⅜" MIN THICK ALUMINUM FOR BRACKETS.
4. APPLY A COAT OF BITUMINOUS PAINT TO ALUMINUM SURFACES THAT WILL BE IN CONTACT WITH CONCRETE.
5. FOR LOCATION OF LADDERS SEE DWG NOS. S-38 AND S-39.
6. INSTALL LADDER ACCORDING TO MANUFACTURER'S INSTRUCTIONS. ANCHORS SHALL BE 316 STAINLESS STEEL, SECURED WITH STRUCTURAL ADHESIVE AND HAVE MINIMUM DIMENSION OF ½" X 6". STRUCTURAL ADHESIVE SHALL MEET FDOT SPECIFICATION 937. TYPE HV OR HSHV REQUIREMENTS.
7. STAINLESS STEEL NUTS AND BOLTS IN CONTACT WITH ALUMINUM SHALL BE COATED WITH A BITUMINOUS PAINT.
8. CONTRACTOR SHALL VERIFY DIMENSION (H).

US Army Corps of Engineers
Jacksonville District

No.	SYM	ZONE	DESCRIPTION
N	A	A-N	ABCD...

DEPARTMENT OF THE ARMY
CORPS OF ENGINEERS
JACKSONVILLE DISTRICT
JACKSONVILLE, FLORIDA

DESIGNED BY: C.B.G.
DWN BY: W.E.S.
CKD BY: J.S.F.
SUBMITTED BY: N/A
DATE: MARCH 2015
SOLICITATION NO.: W912EP-16-R-0010
CONTRACT NO.: N/A
PLOT SCALE: AS SHOWN
PLOT DATE: Apr 25, 2016
FILE NUMBER: N/A
FILE NAME: 114527-HHDRCRIP3-SC558.DGN

HERBERT HOOVER DIKE REHABILITATION PROJECT
STRUCTURE REPLACEMENTS
S-291 (IP-3) RECONSTRUCTION
STRUCTURAL
VERTICAL LADDERS AND SHIP LADDER DETAILS

DRAWING NO.
S-58

pw:\\COE-SAJPW02JAX.saj.ds.usace.army.mil:SAJPW\Documents\C&SF\Herbert Hoover Dike Rehabilitation\03-Culvert Rehabilitation\S-292(IP-1), S-290(IP-2), S-291(IP-3) Culvert Reconstruction\070 - Plans\IP-3\07 Structures\S-58

SAFETY ON THIS JOB DEPENDS ON YOU

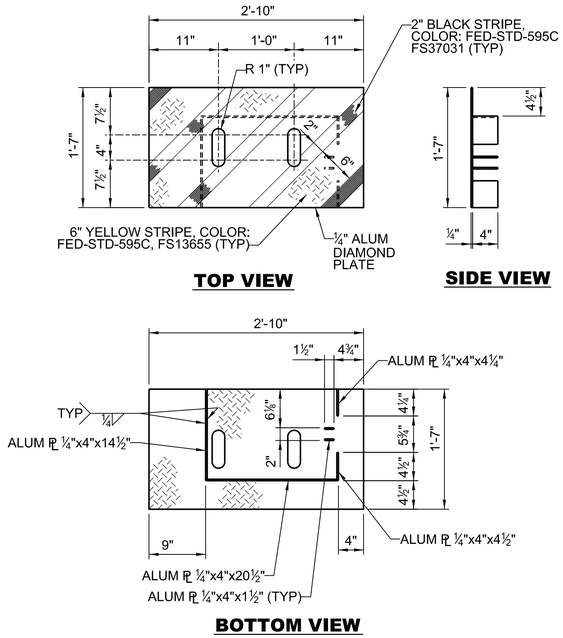

1 **LH SLOT COVER**
SCALE: N.T.S.

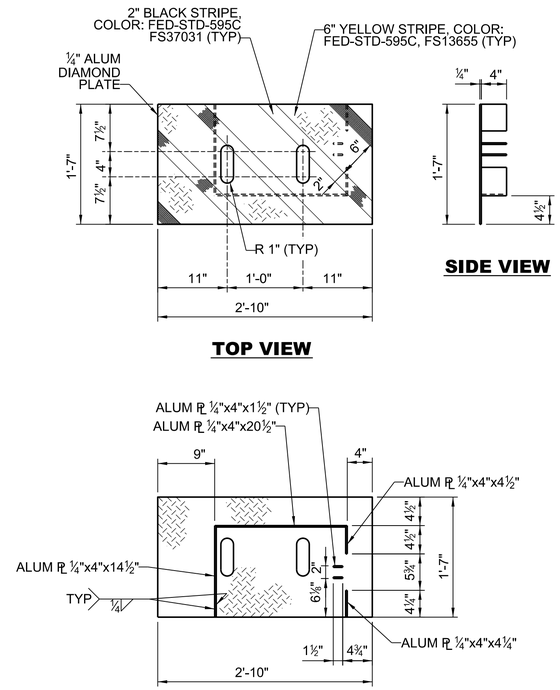

2 **RH SLOT COVER**
SCALE: N.T.S.

US Army Corps of Engineers
Jacksonville District

No.	SYM	ZONE	DESCRIPTION
N	A	A-N	ABCD...

DEPARTMENT OF THE ARMY
CORPS OF ENGINEERS
JACKSONVILLE DISTRICT
JACKSONVILLE, FLORIDA

DESIGNED BY: C.B.G.	DATE: MARCH 2015
DWN BY: W.E.S.	CKD BY: J.S.F.
SOLICITATION NO.: W912EP-16-R-0010	
SUBMITTED BY: N/A	CONTRACT NO.: N/A
PLOT SCALE: AS SHOWN	PLOT DATE: Apr 25, 2016
FILE NUMBER: N/A	
FILE NAME: 114527-HHDRCRIP3-SC559.DGN	

HERBERT HOOVER DIKE REHABILITATION PROJECT
STRUCTURE REPLACEMENTS

S-291 (IP-3) RECONSTRUCTION

STRUCTURAL

REMOVABLE FALL PROTECTION COVERS

DRAWING NO.

S-59

pw:\\COE-SAJPW\P02JAX.saj.ds.usace.army.mil:SAJPW\Documents\C&SF\Herbert Hoover Dike Rehabilitation\03-Culvert Rehabilitation\S-292(IP-1), S-290(IP-2), S-291(IP-3) Culvert Reconstruction\070 - Plans\IP-3\07 Structures\S-59

SAFETY ON THIS JOB DEPENDS ON YOU

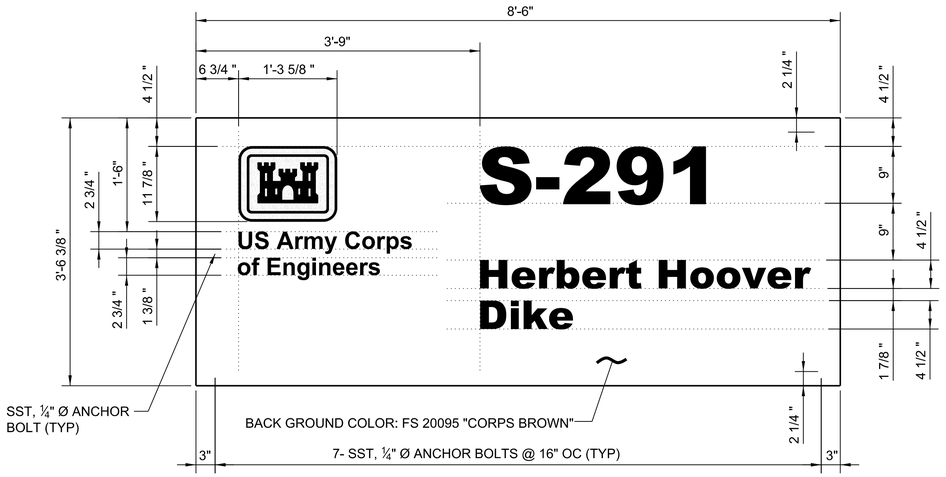

LAKESIDE AND LANDSIDE STRUCTURE IDENTIFICATION SIGN PANEL

1 SCALE: N.T.S.

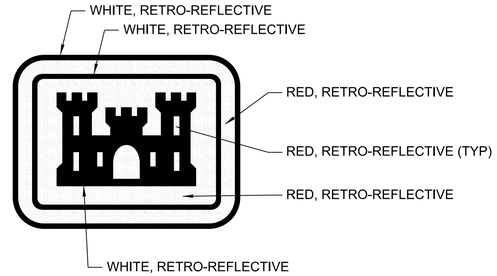

CORPS OF ENGINEERS LOGO DETAIL

SCALE: N.T.S.

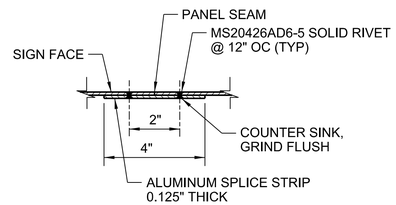

OPTIONAL SIGN PANEL SPLICE DETAIL

SCALE: N.T.S.

GENERAL NOTES:

1. FOR CORPS OF ENGINEERS LOGO SPECIFICATIONS AND GRAPHIC DETAILS, REFER TO U.S. ARMY CORPS OF ENGINEERS, ENGINEERING PAMPHLET, EP 310-1-6, U.S. ARMY CORPS OF ENGINEERS GRAPHIC STANDARDS MANUAL.
2. DOTTED LINES SHOWN IN SIGN PANEL DETAILS ARE FOR LAYOUT PURPOSES ONLY AND SHALL NOT BE INLUDED IN THE FINISHED SIGN.
3. REFER TO FEDERAL STANDARD 595-C FAN DECK FOR "FS" COLOR NUMBER SAMPLES.

MATERIAL NOTES:

1. RETRO-REFLECTIVE SHEETING SHALL BE DIAMOND GRADE, CONFORMING TO ASTM D 4956-04, TYPE IX
2. ALL RETRO-REFLECTIVE SHEETING USED SHALL BE FROM THE SAME MANUFACTURER.
3. SIGN PANELS SHALL BE FABRICATED FROM ALUMINUM 6061-T6 ALLOY, PANELS SHALL BE 0.125 INCHES THICK.

TYPOGRAPHY TABLE

SIGN LEGEND	FONT	COLOR
US ARMY CORPS OF ENGINEERS	HELVETICA MEDIUM	WHITE RETRO-REFLECTIVE
S-291	HELVETICA BOLD	WHITE RETRO-REFLECTIVE
HERBERT HOOVER DIKE	HELVETICA BOLD	WHITE RETRO-REFLECTIVE
RESTRICTED	HELVETICA MEDIUM	WHITE RETRO-REFLECTIVE
KEEP BACK 50 FT	HELVETICA MEDIUM	WHITE RETRO-REFLECTIVE

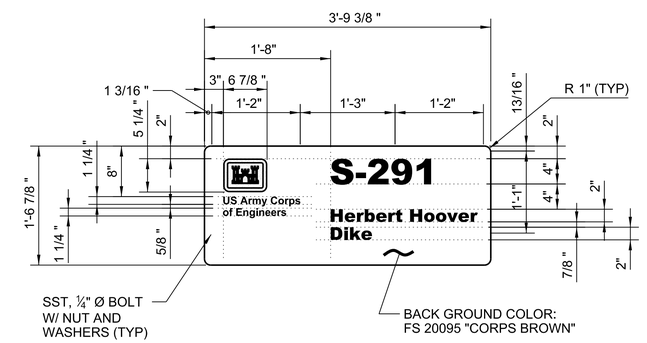

OPERATING PLATFORM SIGN PANEL

2 SCALE: N.T.S.

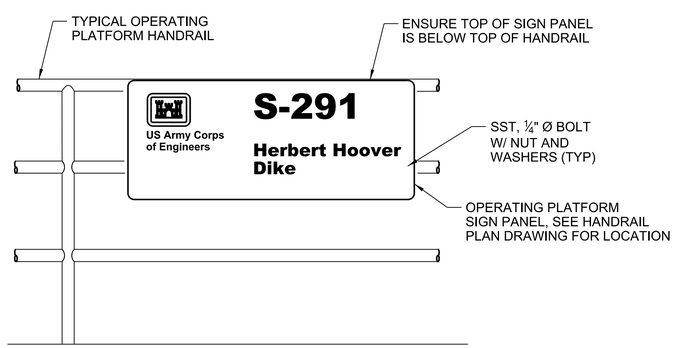

OPERATING PLATFORM SIGN PANEL INSTALLATION DETAIL

SCALE: N.T.S.

WATERWAY SIGN No.1

3 SCALE: N.T.S.

US Army Corps of Engineers, Jacksonville District

No.	SYM	ZONE	DESCRIPTION
N	A	A-N	ABCD...

DEPARTMENT OF THE ARMY
CORPS OF ENGINEERS
JACKSONVILLE DISTRICT
JACKSONVILLE, FLORIDA

DESIGNED BY: C.B.G. | DATE: MARCH 2015
DWN BY: W.E.S. | CKD BY: J.S.F. | SOLICITATION NO.: W912EP-16-R-0010
SUBMITTED BY: N/A | CONTRACT NO.: N/A
PLOT SCALE: AS SHOWN | PLOT DATE: Apr 25, 2014 | FILE NUMBER: N/A
FILE NAME: 114527-HHDRCRIP3-SC560.DGN

HERBERT HOOVER DIKE REHABILITATION PROJECT
STRUCTURE REPLACEMENTS

S-291 (IP-3) RECONSTRUCTION

STRUCTURAL

SIGN DETAILS

DRAWING NO.

S-60

pw:\\COE-SAJ\PWP02JAX.saj.ds.usace.army.mil:SAJPW\Documents\C&SF\Herbert Hoover Dike Rehabilitation\03-Culvert Rehabilitation\S-292(IP-1), S-290(IP-2), S-291(IP-3) Culvert Reconstruction\070 - Plans\IP-3\07 Structures\S-60

SAFETY ON THIS JOB DEPENDS ON YOU

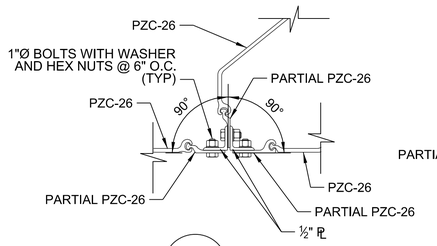

1 S-61 **DETAIL**
SCALE: N.T.S.

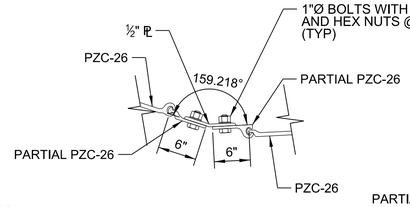

2 S-61 **DETAIL**
SCALE: N.T.S.

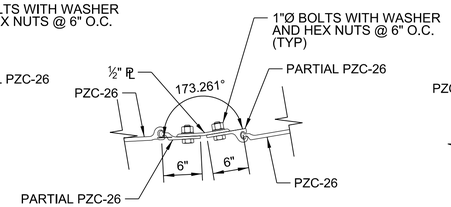

3 S-61 **DETAIL**
SCALE: N.T.S.

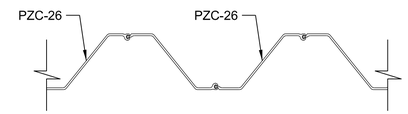

4 S-61 **DETAIL**
SCALE: N.T.S.

GENERAL NOTES:

1. THE CONTRACTOR MAY USE OTHER HOT-ROLLED COMBINATION STEEL H-PILE PLUS SHEET PILE SECTIONS PROVIDED THE STEEL COFFERDAM WALL MEETS OR EXCEEDS THE FOLLOWING MINIMUM REQUIREMENTS:
   a. MINIMUM SECTION MODULUS: 48.4 INCHES^3 PER FOOT OF WALL
   b. MINIMUM MOMENT OF INERTIA: 428.0 INCHES^4 PER FOOT OF WALL
2. CONTRACTOR SHALL MAINTAIN OVERALL CENTERLINES AND ALIGNMENT.
3. THE CONTRACTOR SHALL NOT USE PIPE PILE WALLS.
4. CONTRACTOR SHALL SUBMIT A PILE LAYOUT PLAN FOR THE ACTUAL PILE SECTIONS APPROVED FOR USE.
5. FABRICATED CORNER SECTIONS AND NON-STANDARD CONNECTIONS MAY BE RIVETED, BOLTED, OR WELDED. FABRICATED SECTIONS SHALL CONFORM TO THE PILING MANUFACTURER'S RECOMMENDATIONS FOR FABRICATED SECTIONS.
6. PILES PULLED AND RE-USED SHALL BE INSPECTED AND APPROVED BY THE GOVERNMENT.
7. REFER TO DWG NO. C-01 THROUGH C-03 FOR COFFERDAM PLANS.
8. COFFERDAM SHALL REMAIN IN PLACE UNTIL THE EMBANKMENT IS RECONSTRUCTED TO THE DESIGN TEMPLATE AND ACCEPTED.
9. DIFFICULT DRIVING CONDITIONS DUE TO LIMESTONE, SANDSTONE, HIGHLY CEMENTED AND/OR DENSE MATERIALS MAY BE ENCOUNTERED. SEE SPECIFICATION SECTIONS 00 31 32 GEOTECHNICAL DATA REPORT AND 31 41 16 METAL SHEET PILING FOR ADDITIONAL INFORMATION.
10. DRIVEN PILE COFFERDAM IS NOT WATER TIGHT.

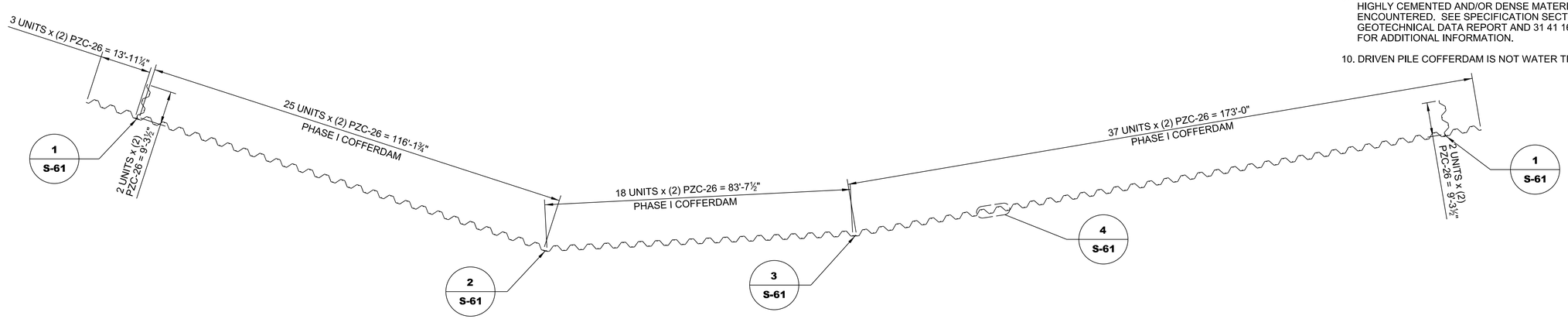

PLAN LAKESIDE
SCALE: N.T.S.

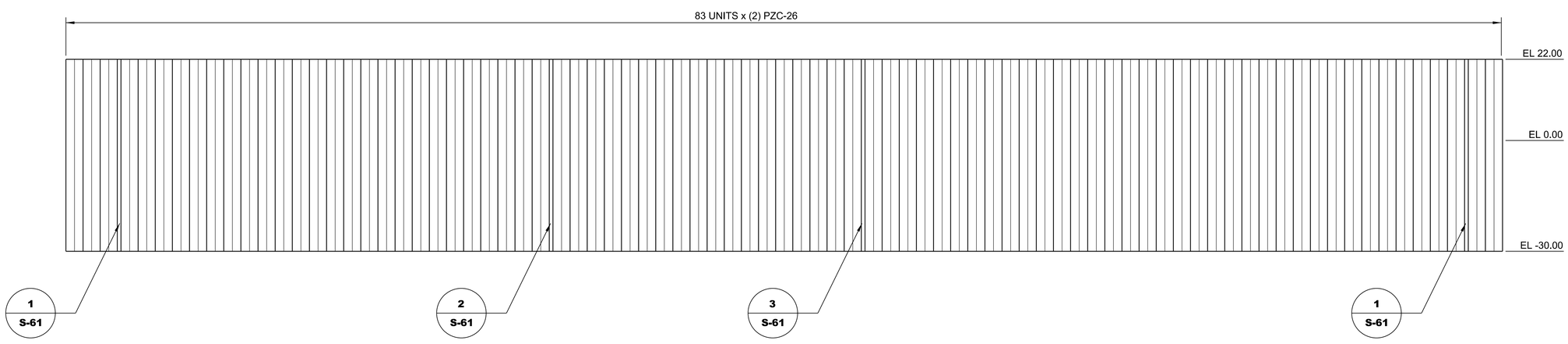

ELEVATION LAKESIDE
SCALE: N.T.S.

US Army Corps of Engineers
Jacksonville District

No.	SYM	ZONE	DESCRIPTION
N	A-N	ABCD...	

DEPARTMENT OF THE ARMY
CORPS OF ENGINEERS
JACKSONVILLE DISTRICT
JACKSONVILLE, FLORIDA

DESIGNED BY: C.B.G. | DATE: MARCH 2015
DWN BY: W.E.S. | CKD BY: J.S.F. | SOLICITATION NO.: W912EP-16-R-0010
SUBMITTED BY: N/A | CONTRACT NO.: N/A
PLOT SCALE: AS SHOWN | PLOT DATE: Apr 25, 2016 | FILE NUMBER: N/A
FILE NAME: 114527-HHDRCRIP3-SC561.DGN

HERBERT HOOVER DIKE REHABILITATION PROJECT
STRUCTURE REPLACEMENTS
S-291 (IP-3) RECONSTRUCTION
STRUCTURAL
PHASE I STEEL COFFERDAM PLAN AND DETAILS

DRAWING NO.
S-61

pw:\\COE-SAJ\PWP02\JAX.saj.ds.usace.army.mil:SAJ\PW\Documents\C&SF\Herbert Hoover Dike Rehabilitation\03-Culvert Rehabilitation\S-292(IP-1), S-290(IP-2), S-291(IP-3) Culvert Reconstruction\070 - Plans\IP-3\07 Structures\S-61

SAFETY ON THIS JOB DEPENDS ON YOU

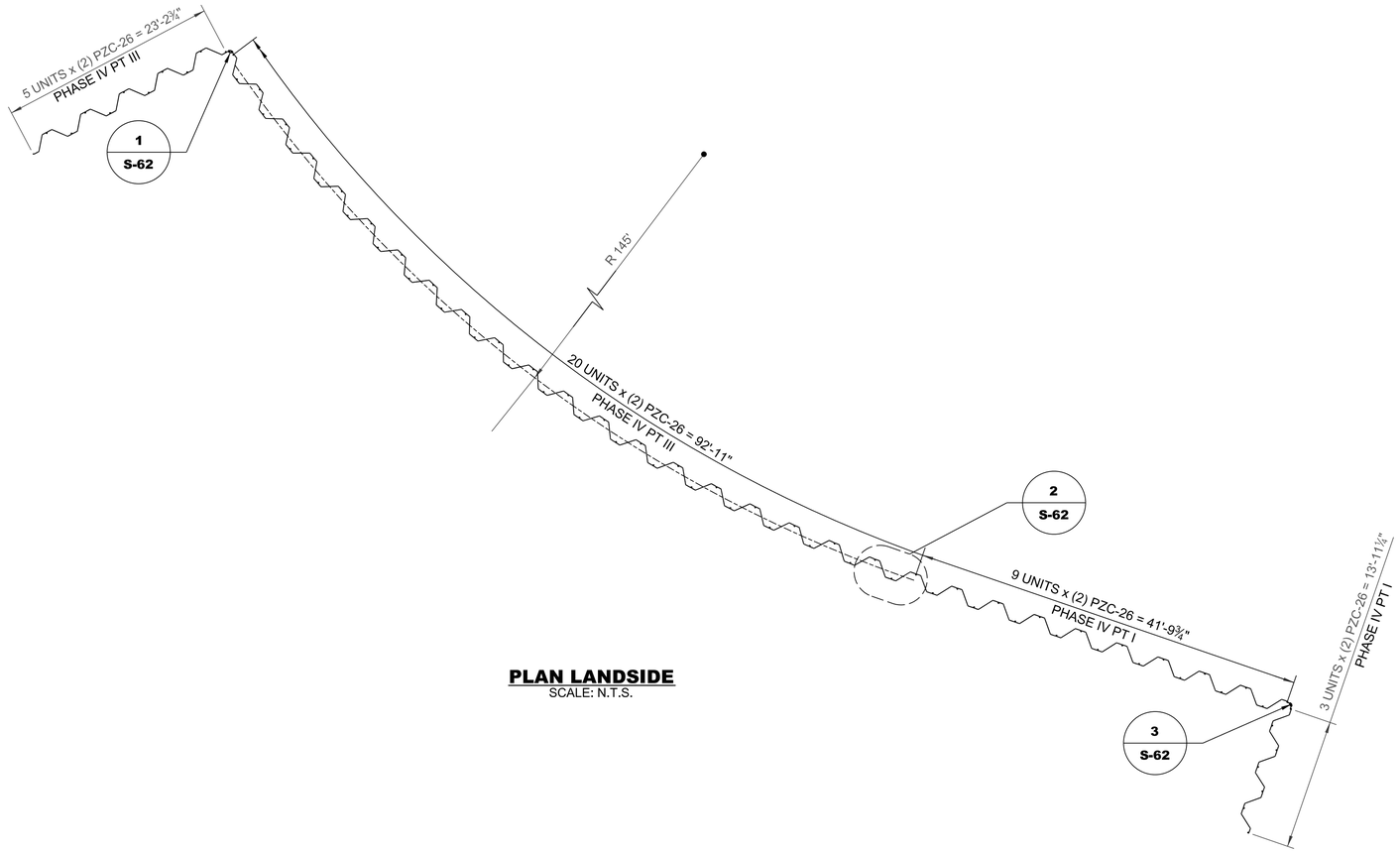

PLAN LANDSIDE
SCALE: N.T.S.

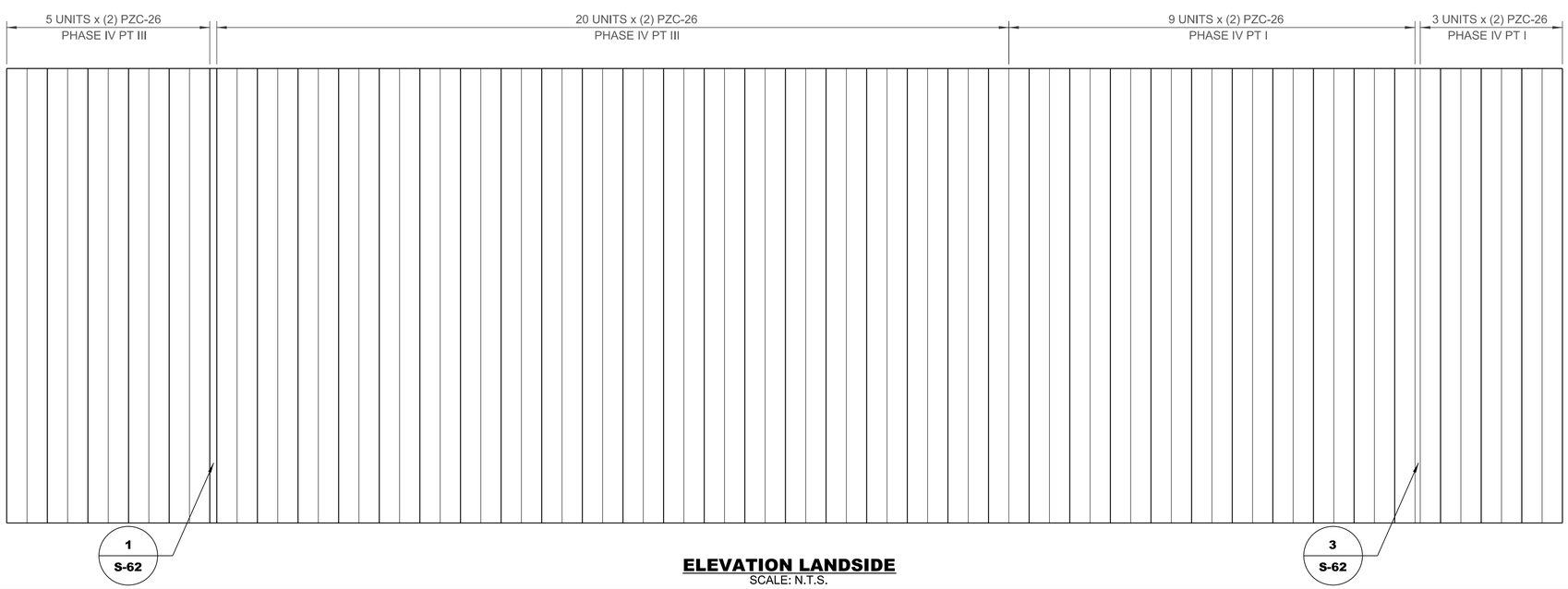

ELEVATION LANDSIDE
SCALE: N.T.S.

GENERAL NOTES:

1. THE CONTRACTOR MAY USE OTHER HOT-ROLLED COMBINATION STEEL H-PILE PLUS SHEET PILE SECTIONS PROVIDED THE STEEL COFFERDAM WALL MEETS OR EXCEEDS THE FOLLOWING MINIMUM REQUIREMENTS:

   a. MINIMUM SECTION MODULUS: 48.4 INCHES^3 PER FOOT OF WALL
   b. MINIMUM MOMENT OF INERTIA: 428.0 INCHES^4 PER FOOT OF WALL

2. CONTRACTOR SHALL MAINTAIN OVERALL CENTERLINES AND ALIGNMENT.
3. THE CONTRACTOR SHALL NOT USE PIPE PILE WALLS.
4. CONTRACTOR SHALL SUBMIT A PILE LAYOUT PLAN FOR THE ACTUAL PILE SECTIONS APPROVED FOR USE.
5. FABRICATED CORNER SECTIONS AND NON-STANDARD CONNECTIONS MAY BE RIVETED, BOLTED, OR WELDED. FABRICATED SECTIONS SHALL CONFORM TO THE PILING MANUFACTURER'S RECOMMENDATIONS FOR FABRICATED SECTIONS.
6. PILES PULLED AND RE-USED SHALL BE INSPECTED AND APPROVED BY THE GOVERNMENT.
7. REFER TO DWG NO. C-12 THROUGH C-21 FOR COFFERDAM PLANS.
8. COFFERDAM SHALL REMAIN IN PLACE UNTIL THE EMBANKMENT IS RECONSTRUCTED TO THE DESIGN TEMPLATE AND ACCEPTED.
9. DIFFICULT DRIVING CONDITIONS DUE TO LIMESTONE, SANDSTONE, HIGHLY CEMENTED AND/OR DENSE MATERIALS MAY BE ENCOUNTERED. SEE SPECIFICATION SECTIONS 00 31 32 GEOTECHNICAL DATA REPORT AND 31 41 16 METAL SHEET PILING FOR ADDITIONAL INFORMATION.
10. DRIVEN PILE COFFERDAM IS NOT WATER TIGHT.

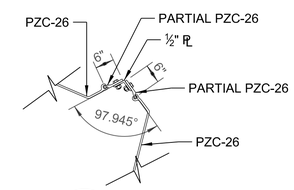

1 S-62 **DETAIL**
SCALE: N.T.S.

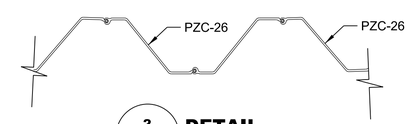

2 S-62 **DETAIL**
SCALE: N.T.S.

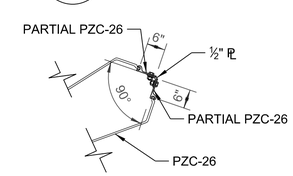

3 S-62 **DETAIL**
SCALE: N.T.S.

US Army Corps of Engineers
Jacksonville District

No.	SYM	ZONE	DESCRIPTION
N	A	A-N	ABCD...

DEPARTMENT OF THE ARMY
CORPS OF ENGINEERS
JACKSONVILLE DISTRICT
JACKSONVILLE, FLORIDA

DESIGNED BY: C.B.G.	DATE: JANUARY 2016
DWN BY: W.E.S.	CKD BY: J.S.F.
SOLICITATION NO.: W912EP-16-R-0010	
SUBMITTED BY: N/A	CONTRACT NO.: N/A
PLOT SCALE: As shown	PLOT DATE: Apr 25, 2016
FILE NUMBER: N/A	
FILE NAME: 114527-HHDRCRIP3-SC562.DGN	

HERBERT HOOVER DIKE REHABILITATION PROJECT
STRUCTURE REPLACEMENTS

S-291 (IP-3) RECONSTRUCTION

STRUCTURAL
LANDSIDE
PHASE IV STEEL COFFERDAM PLAN AND DETAILS

DRAWING NO.
S-62

pw:\\COE-SAJPW\P02JAX.saj.ds.usace.army.mil:SAJPW\Documents\C&SF\Herbert Hoover Dike Rehabilitation\03-Culvert Rehabilitation\S-292(IP-1), S-290(IP-2), S-291(IP-3) Culvert Reconstruction\070 - Plans\IP-3\07 Structures\S-62

SAFETY ON THIS JOB DEPENDS ON YOU

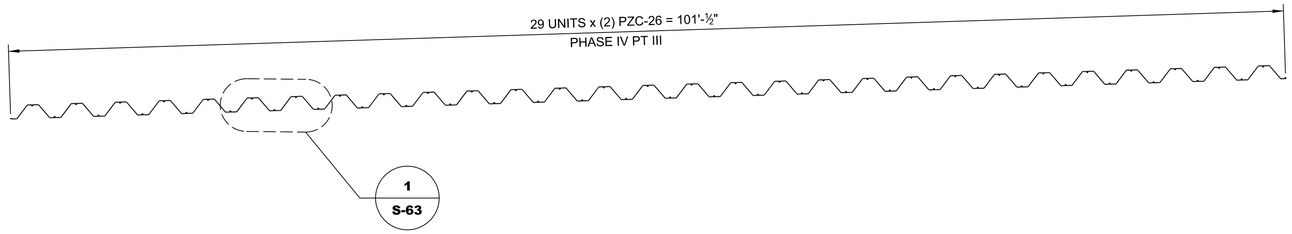

PLAN LAKESIDE
SCALE: N.T.S.

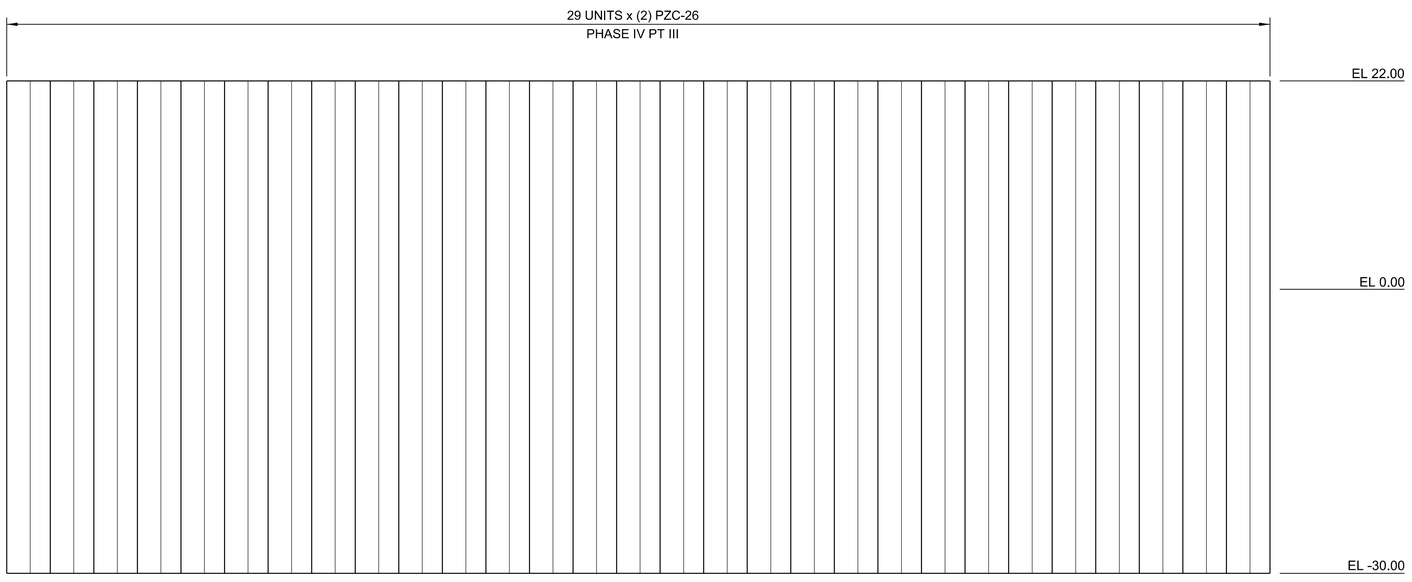

ELEVATION LAKESIDE
SCALE: N.T.S.

GENERAL NOTES:

1. THE CONTRACTOR MAY USE OTHER HOT-ROLLED COMBINATION STEEL H-PILE PLUS SHEET PILE SECTIONS PROVIDED THE STEEL COFFERDAM WALL MEETS OR EXCEEDS THE FOLLOWING MINIMUM REQUIREMENTS:

   a. MINIMUM SECTION MODULUS: 48.4 INCHES^3 PER FOOT OF WALL
   b. MINIMUM MOMENT OF INERTIA: 428.0 INCHES^4 PER FOOT OF WALL

2. CONTRACTOR SHALL MAINTAIN OVERALL CENTERLINES AND ALIGNMENT.
3. THE CONTRACTOR SHALL NOT USE PIPE PILE WALLS.
4. CONTRACTOR SHALL SUBMIT A PILE LAYOUT PLAN FOR THE ACTUAL PILE SECTIONS APPROVED FOR USE.
5. FABRICATED CORNER SECTIONS AND NON-STANDARD CONNECTIONS MAY BE RIVETED, BOLTED, OR WELDED. FABRICATED SECTIONS SHALL CONFORM TO THE PILING MANUFACTURER'S RECOMMENDATIONS FOR FABRICATED SECTIONS.
6. PILES PULLED AND RE-USED SHALL BE INSPECTED AND APPROVED BY THE GOVERNMENT.
7. REFER TO DWG NO. C-12 THROUGH C-21 FOR COFFERDAM PLANS.
8. COFFERDAM SHALL REMAIN IN PLACE UNTIL THE EMBANKMENT IS RECONSTRUCTED TO THE DESIGN TEMPLATE AND ACCEPTED.
9. DIFFICULT DRIVING CONDITIONS DUE TO LIMESTONE, SANDSTONE, HIGHLY CEMENTED AND/OR DENSE MATERIALS MAY BE ENCOUNTERED. SEE SPECIFICATION SECTIONS 00 31 32 GEOTECHNICAL DATA REPORT AND 31 41 16 METAL SHEET PILING FOR ADDITIONAL INFORMATION.
10. DRIVEN PILE COFFERDAM IS NOT WATER TIGHT.

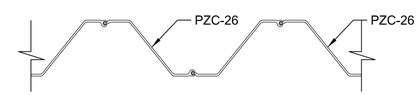

1 / S-63 **DETAIL**
SCALE: N.T.S.

US Army Corps of Engineers
Jacksonville District

No.	SYM	ZONE	DESCRIPTION
N	A-N	ABCD...	

DEPARTMENT OF THE ARMY
CORPS OF ENGINEERS
JACKSONVILLE DISTRICT
JACKSONVILLE, FLORIDA

DESIGNED BY: C.B.G.
DWN BY: W.E.S.
CKD BY: J.S.F.
SUBMITTED BY: N/A
DATE: JANUARY 2016
SOLICITATION NO.: W912EP-16-R-0010
CONTRACT NO.: N/A
PLOT SCALE: As shown
PLOT DATE: Apr 25, 2016
FILE NUMBER: N/A
FILE NAME: 114527-HHDRCRIP3-SC563.DGN

HERBERT HOOVER DIKE REHABILITATION PROJECT
STRUCTURE REPLACEMENTS
S-291 (IP-3) RECONSTRUCTION
STRUCTURAL
LAKESIDE
PHASE IV STEEL COFFERDAM PLAN AND DETAILS

DRAWING NO.
S-63

pw:\\COE-SAJPW\P02\JAX.saj.ds.usace.army.mil:SAJPW\Documents\C&SF\Herbert Hoover Dike Rehabilitation\03-Culvert Reconstruction\070 - Plans\IP-3\07 Structures\S-63

SAFETY ON THIS JOB DEPENDS ON YOU

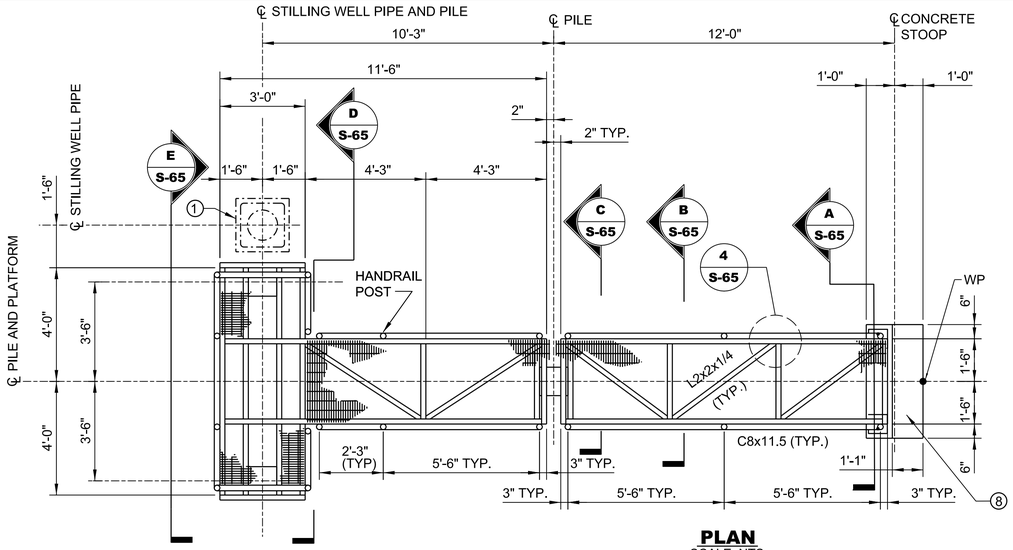

PLAN
SCALE: NTS

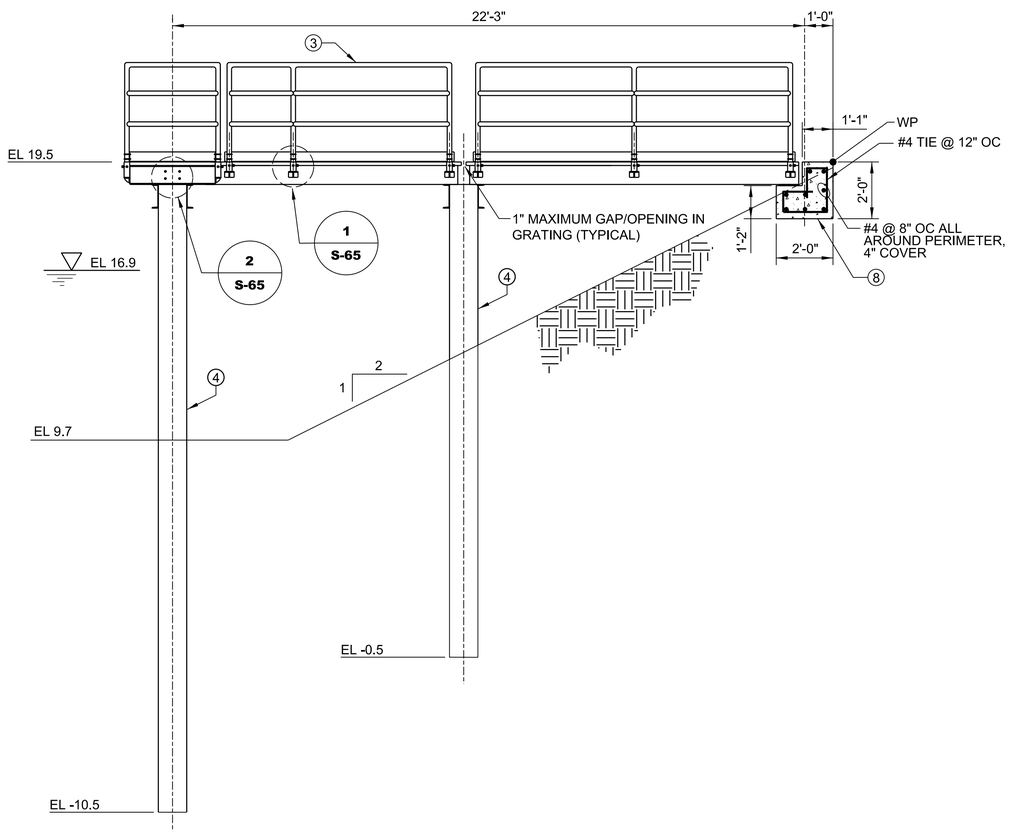

ELEVATION
SCALE: NTS

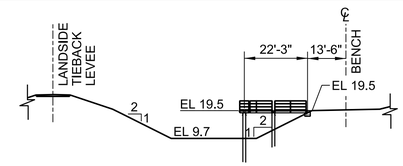

IP-3 CANAL SECTION
SCALE: NTS

GENERAL NOTES:

1. PLATFORM FRAME - C8x11.5 (A-36).
2. CROSS BRACING - L2x2x1/4 (A-36).
3. HANDRAIL - 1 1/2" DIA.
4. WALKWAY STRUCTURAL STEEL MEMBERS AND HARDWARE SHALL BE HOT DIPPED GALVANIZED OR COATED AS FOLLOWS:

   SURFACE PREPARATION - SSPC-SPI AND SC.. CLEAN AND DRY.

   FIRST COAT - MODIFIED VINYL-ALKYD OR EPOXY 1.5 TO 2.0 MILS DRY FILM THICKNESS.

   SECOND COAT - HIGH SOLIDS ALIPHATIC OR ACRYLIC POLYURETHANE GLOSS ENAMEL WITH MINIMUM 52% SOLIDS BY VOLUME, 2.0 MILS DRY FILM THICKNESS.

   SYSTEM TOTAL - 3.5 MILS MINIMUM DRY FILM THICKNESS. CHECK FOR VOIDS WITH HOLIDAY OR PINHOLE DETECTOR.

   VOLATILE ORGANIC - MAXIMUM 3.5 LB./GAL. (425 g/l). CONTENT.
5. CONCRETE PILES - COMMERCIAL GRADE 12" SQUARE SHALL BE DESIGNED AND MANUFACTURED BY THE CONCRETE MANUFACTURER. THE CONCRETE PILES SHALL BE DESIGNED TO RESIST THE LOADINGS SPECIFIED ON SECTION 31 62 13 PARAGRAPH: PRETENTIONED PILES. FOR PILE INSTALLATION TOLERANCES SEE SECTION 31 62 13. NOTE: THE CENTER OF THE AXIS OF THE PILE HEAD AFTER DRIVING SHALL NOT VARY FROM THE PLAN LOCATION AT CUTOFF BY MORE THAN 3 INCHES.
6. BOLTS - BOLTS CONNECTING TO CONCRETE PILE SHALL BE 3/4" DIA. SST T316 WITH NUTS AND WASHERS.
7. ALL WELDS SHALL COMPLY WITH AWS REQUIREMENTS.
8. GRATING SHALL BE 1 1/2" MINIMUM HOT DIPPED GALVANIZED. ALL GRATING SHALL BE REMOVABLE AND EDGES SHALL BE BANDED.
9. PLATFORM CONTRACTOR SHALL FIELD VERIFY LOCATION OF CONCRETE PILES PRIOR TO FABRICATION OF PLATFORM SECTIONS. A MAXIMUM OF 1" CLEARANCE BETWEEN PLATFORM GRATING IS REQUIRED.
10. PROVIDE ILLUMINATION LIGHTING AND REFLECTORS OR REFLECTIVE MARKING TAPE ON ALL STRUCTURES LOCATED WITHIN CANALS OR WATER BODIES THAT ARE ACCESSIBLE BY THE GENERAL PUBLIC DURING NON-DAYLIGHT HOURS.
11. FOR WORKING POINT (WP) COORDINATES, SEE DWG NO. C-20
12. SEE MECHANICAL DRAWINGS FOR DETAILS OF STILLING WELL AND STILLING WELL ENCLOSURE.

DESIGN CRITERIA:

1. WIND SPEED - 100 YEAR RECURRENCE INTERVAL.
2. WIND EXPOSURE - C.
3. IMPORTANCE FACTOR - 1.15.
4. HANDRAIL PER OSHA 29 CFR 1910.23 (e)

KEY NOTES:

MARK	DESCRIPTION	SHT #	SPEC. SECTION	REMARKS
1	STILLING WELL	SEE MECH		
~~2~~	~~NOT USED~~			
3	HANDRAIL			
4	CONCRETE PILE 12"x12"		31 62 13	
5	GRATING			
6	PLATFORM BEAM			C8x11.5
7	SUPPORT BRACKET	SEE MECH		
8	END SUPPORT			

US Army Corps of Engineers
Jacksonville District

No.	SYM	ZONE	DESCRIPTION
N	A	A-N	ABCD...

DEPARTMENT OF THE ARMY
CORPS OF ENGINEERS
JACKSONVILLE DISTRICT
JACKSONVILLE, FLORIDA

DESIGNED BY: B.J.S. | DATE: MARCH 2016
DWN BY: B.J.S. | CKD BY: C.B.G. | SOLICITATION NO.: W912EP-16-R-0010
SUBMITTED BY: N/A | CONTRACT NO.: N/A
PLOT SCALE: AS SHOWN | PLOT DATE: Apr 26, 2016 | FILE NUMBER: N/A
FILE NAME: 114527-HHDRCRIP3-SC64.DGN

HERBERT HOOVER DIKE REHABILITATION PROJECT
STRUCTURE REPLACEMENTS

S-291 (IP-3) RECONSTRUCTION

STRUCTURAL

STILLING WELL INSTRUMENTATION PLATFORM PLAN AND ELEVATION

DRAWING NO.

S-64

pw:\\COE-SAJ\PW\P02JAX.saj.ds.usace.army.mil:SAJ\PW\Documents\C&SF\Herbert Hoover Dike Rehabilitation\03-Culvert Rehabilitation\S-292(IP-1), S-290(IP-2), S-291(IP-3) Culvert Reconstruction\070 - Plans\IP-3\07 Structures\S-64

SAFETY ON THIS JOB DEPENDS ON YOU

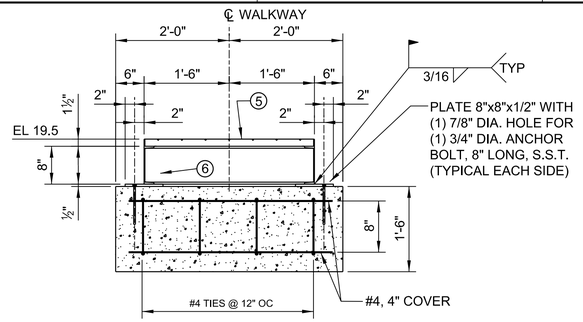

A S-64 **SECTION**
SCALE: A

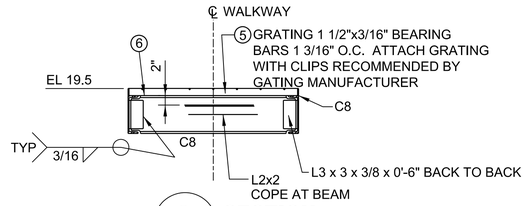

B S-64 **SECTION**
SCALE: A

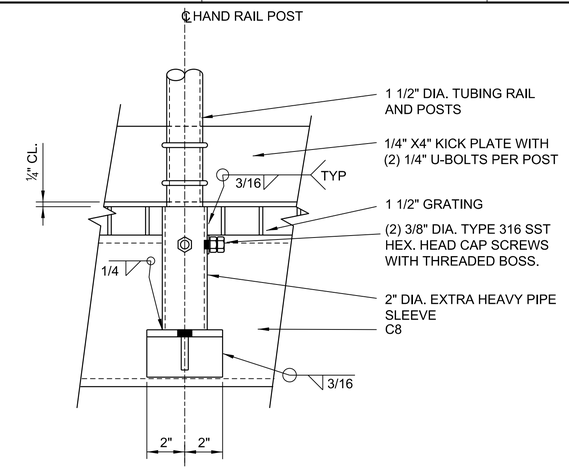

NOTE: WHEN DISSIMILAR METALS ARE INTERFACING EACH OTHER USE FELT OR GASKET MATERIAL.

1 S-64 **DETAIL**
SCALE: A

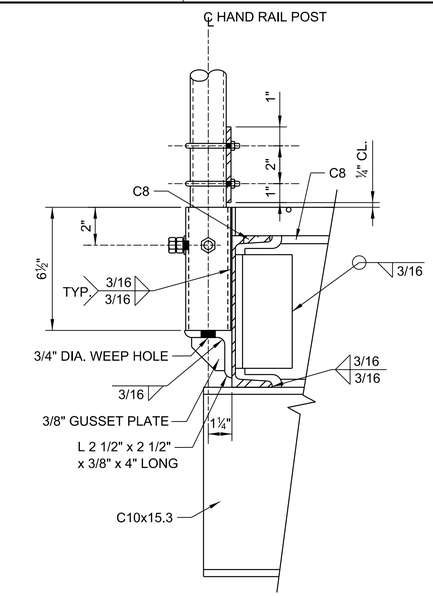

3 S-65 **DETAIL**
SCALE: A

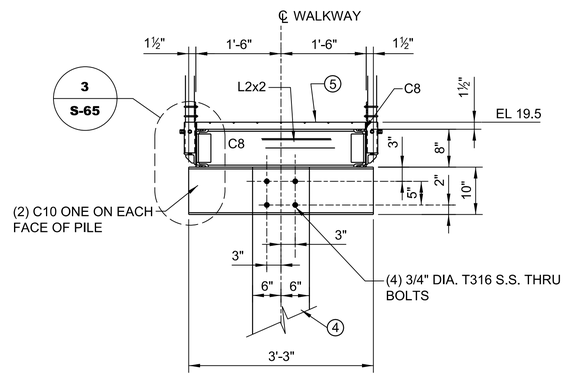

C S-64 **SECTION**
SCALE: A

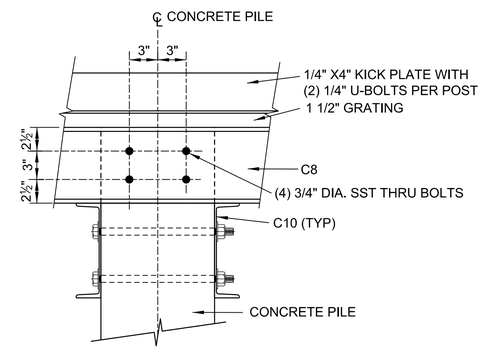

2 S-64 **DETAIL**
SCALE: A

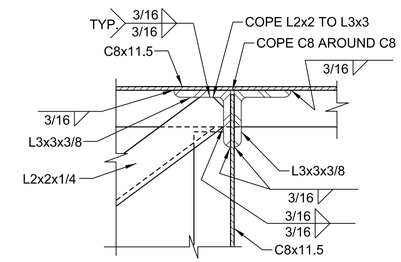

NOTE: GRATING NOT SHOWN FOR CLARITY

4 S-65 **DETAIL**
SCALE: A

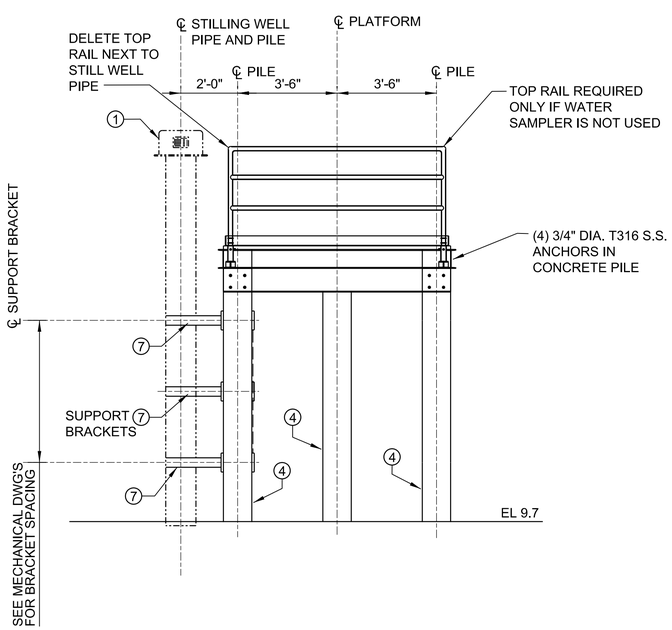

E S-64 **SECTION**
SCALE: B

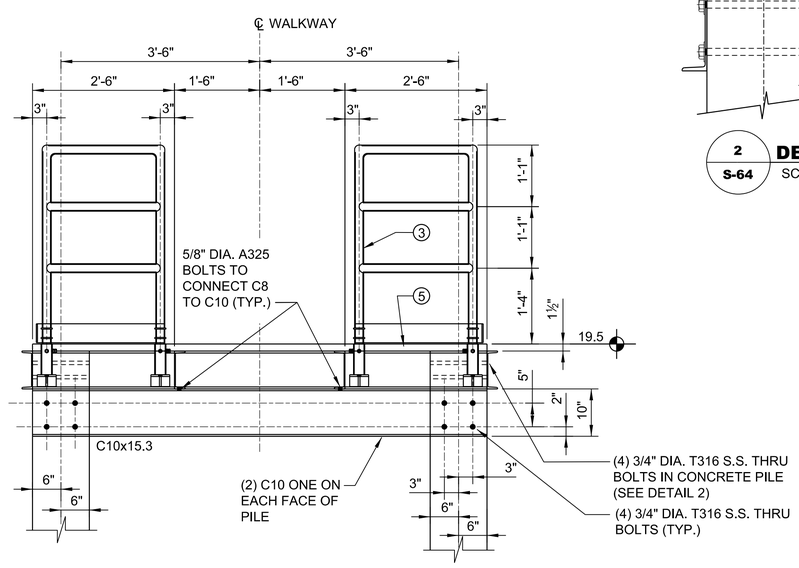

NOTE: STILLING WELL NOT SHOWN FOR CLARITY.

D S-64 **SECTION**
SCALE: B

GRAPHIC SCALES

"A" 24" 12" 0 2' 4' 6'
"B" 12" 6" 0 1' 2' 3'
"C" 12" 9" 6" 3" 0 1'

US Army Corps of Engineers
Jacksonville District

No.	SYM	ZONE	DESCRIPTION
N	A	A-N	ABCD...

DESIGNED BY: B.J.S.
DWN BY: B.J.S.
CKD BY: C.B.G.
SUBMITTED BY:
DATE: APR 2016
SOLICITATION NO.: W912EP-16-R-0010
CONTRACT NO.: N/A
N/A
PLOT SCALE: As Shown
PLOT DATE: Apr 25, 2016
FILE NUMBER: N/A
FILE NAME: 114527-HHDRCRIP3-SC65.DGN

DEPARTMENT OF THE ARMY
CORPS OF ENGINEERS
JACKSONVILLE DISTRICT
JACKSONVILLE, FLORIDA

HERBERT HOOVER DIKE REHABILITATION PROJECT
STRUCTURE REPLACEMENTS

S-291 (IP-3) RECONSTRUCTION

STRUCTURAL
STILLING WELL PLATFORM SECTIONS AND DETAILS

DRAWING NO.
S-65

pw:\\COE-SAJPW\P02JAX.saj.ds.usace.army.mil:SAJPW\Documents\C&SF\Herbert Hoover Dike Rehabilitation\03-Culvert Reconstruction\070 - Plans\IP-3\07 Structures\S-65

SAFETY ON THIS JOB DEPENDS ON YOU

NOTES:

1. SEE DRAWINGS S-02 AND S-03 FOR LOCATION OF STILLING WELLS.
2. FOR FEATURES NOTED USING CIRCLE CALLOUTS (#), REFER TO DRAWING M-03 FOR THE SCHEDULE.
3. GROUND ALL METAL PARTS TO CONTROL BUILDING GROUNDING GRID.
4. 3/4-INCH DIA. COPPER CLAD GROUNDING ROD, 10' LONG MINIMUM. SEE ELECTRICAL SPECIFICATIONS.

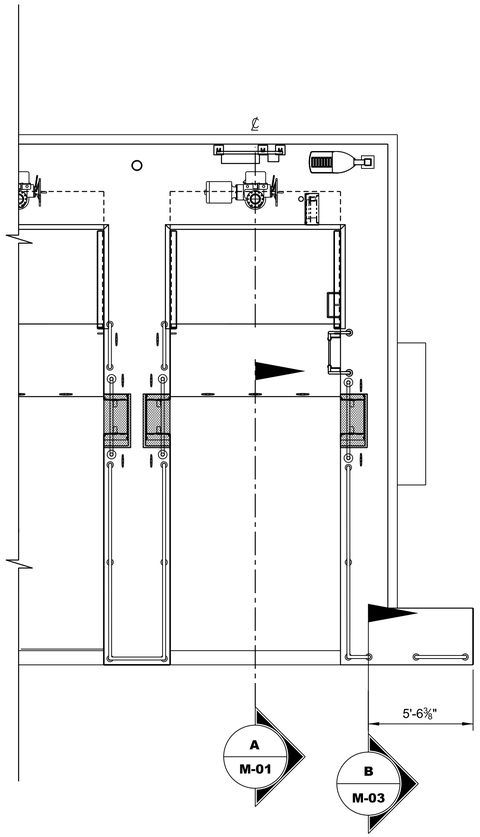

LAKESIDE PLAN
SCALE: A

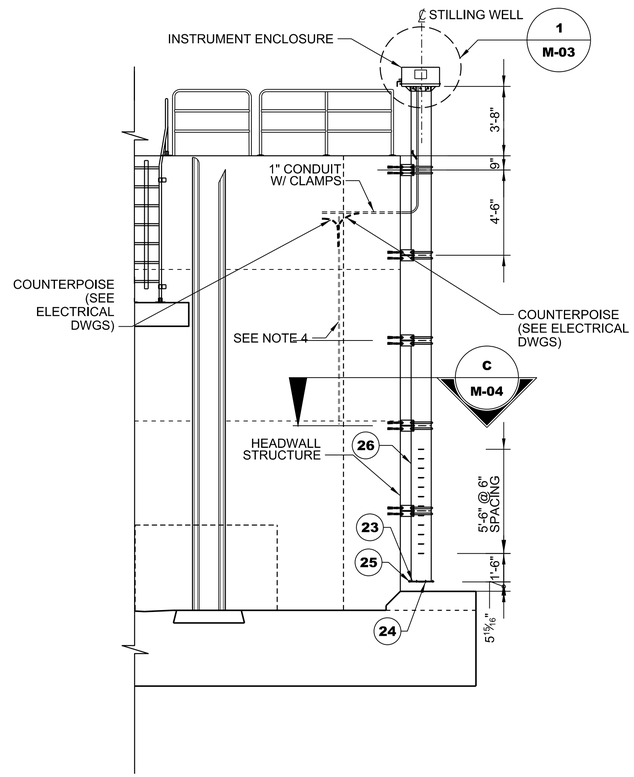

A M-01 **LAKESIDE ELEVATION**
SCALE: A

GRAPHIC SCALE

"A" 24" 12" 0 2' 4' 6' 8' 10'

US Army Corps of Engineers
Jacksonville District

No.	SYM	ZONE	DESCRIPTION

DEPARTMENT OF THE ARMY
CORPS OF ENGINEERS
JACKSONVILLE DISTRICT
JACKSONVILLE, FLORIDA

DESIGNED BY: M.D.	DATE: MARCH 2015
DWN BY: J.D.H.	CKD BY: S.J.P.
SOLICITATION NO.: W912EP-16-R-0010	CONTRACT NO.: N/A
SUBMITTED BY: N/A	
PLOT SCALE: AS SHOWN	PLOT DATE: Apr 25, 2016
FILE NUMBER: N/A	
FILE NAME: 114527-HHDRCRIP3-MI101.DGN	

HERBERT HOOVER DIKE REHABILITATION PROJECT
STRUCTURE REPLACEMENTS

S-291 (IP-3) RECONSTRUCTION

MECHANICAL

LAKESIDE STILLING WELL PLAN AND ELEVATION

DRAWING NO.
M-01

pw:\\COE-SAJPWP02.JAX.saj.ds.usace.army.mil:SAJPW\Documents\C&SF\Herbert Hoover Dike Rehabilitation\03-Culvert Rehabilitation\S-292(IP-1), S-290(IP-2), S-291(IP-3) Culvert Reconstruction\070 - Plans\IP-3\14 Mechanical\M-01

SAFETY ON THIS JOB DEPENDS ON YOU

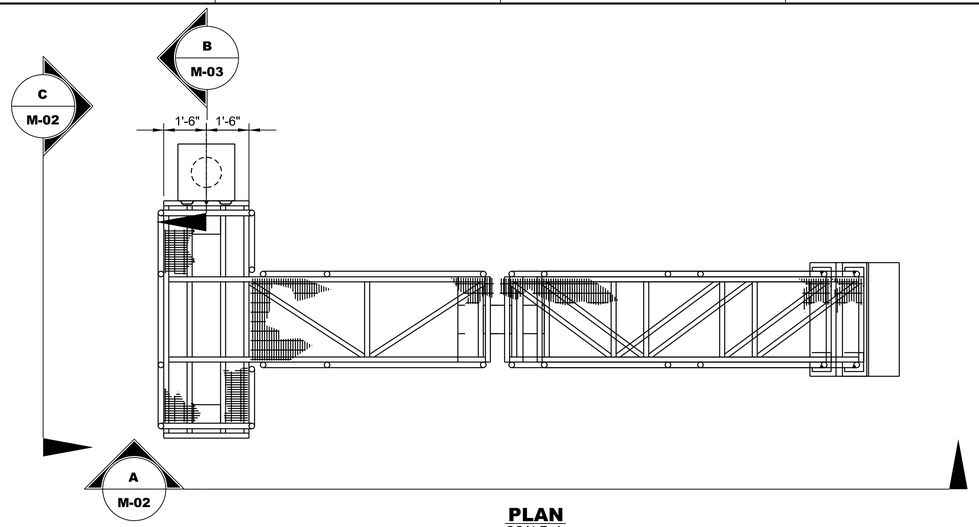

PLAN
SCALE: A

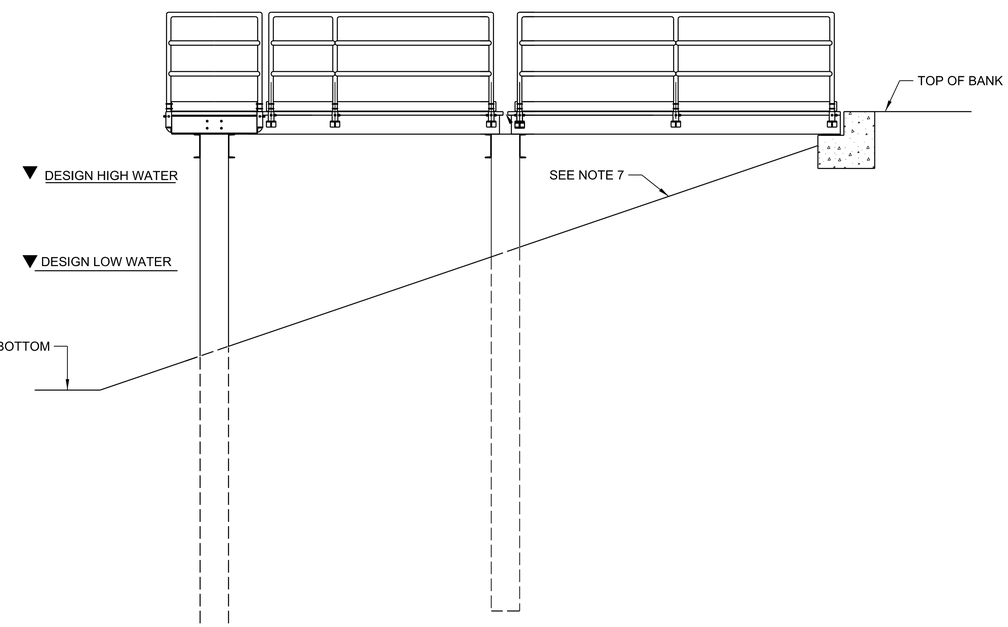

A M-02 **ELEVATION**
SCALE: A

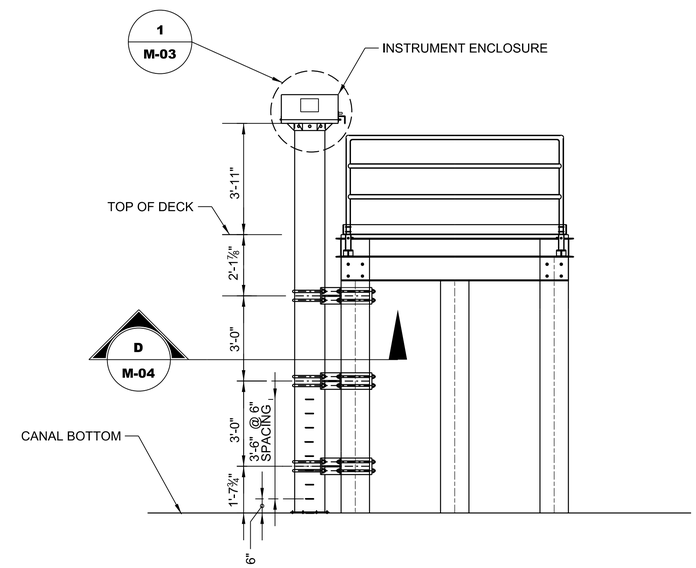

C M-02 **ELEVATION**
SCALE: A

GENERAL NOTES:

1. THE STILLING WELL SHALL BE INSTALLED PLUMB WITH NO MORE THAN 1/2" DEVIATION FROM VERTICAL OVER THE HEIGHT OF THE STILLING WELL.
2. STILLING WELL CONNECTIONS SHALL BE WATERTIGHT.
3. USE ANTI-SEIZE COMPOUND ON ALL CONDUIT FITTINGS. SOLVENT CLEAN ALL SURFACES PRIOR TO APPLYING PVC CEMENT.
4. ALL CONDUITS SHALL HAVE PULL STRINGS OR CONDUCTORS INSTALLED PER THE RTU DRAWINGS, OR CIRCUIT SCHEDULE ON ELECTRICAL DRAWINGS.
5. CONTRACTOR SHALL FIELD-VERIFY PIPE LENGTHS AND ELEVATIONS BEFORE CONSTRUCTION. USE SLIP COUPLINGS IF NEEDED.
7. DIMENSIONS AND ELEVATIONS SHOWN SHALL BE VERIFIED BY THE CONTRACTOR WHO IS SOLELY RESPONSIBLE FOR THE PROPER INSTALLATION OF THE STILLING WELL.
8. FOR SLOPE, SEE CIVIL DRAWINGS.

WALKWAY STILLING WELL TABLE

STRUCTURE	TOP OF BANK (FT-NAVD88)	DESIGN HIGH WATER (FT-NAVD88)	DESIGN LOW WATER (FT-NAVD88)	CANAL BOTTOM (FT-NAVD88)
IP-3	19.5 +/-	16.9	13.9	9.7

GRAPHIC SCALE
"A" 24" 12" 0 2' 4' 6'

US Army Corps of Engineers
Jacksonville District

No.	SYM	ZONE	DESCRIPTION
N	A	A-N	ABCD...

DEPARTMENT OF THE ARMY
CORPS OF ENGINEERS
JACKSONVILLE DISTRICT
JACKSONVILLE, FLORIDA

DESIGNED BY: M.D.
DWN BY: J.D.H.
CKD BY: S.J.P.
SUBMITTED BY: N/A
DATE: APRIL 2016
SOLICITATION NO.: W912EP-16-R-0010
CONTRACT NO.: N/A
PLOT SCALE: As shown
PLOT DATE: Apr 25, 2016
FILE NUMBER: N/A
FILE NAME: 114527-HHDRCRIP3-MI102

HERBERT HOOVER DIKE REHABILITATION PROJECT
STRUCTURE REPLACEMENTS
S-291 (IP-3) RECONSTRUCTION
MECHANICAL
LANDSIDE STILLING WELL
PLAN AND ELEVATIONS

DRAWING NO.
M-02

pw:\\COE-SAJPWP02JAX.saj.ds.usace.army.mil:SAJPW\Documents\C&SF\Herbert Hoover Dike Rehabilitation\03-Culvert Rehabilitation\S-292(IP-1), S-290(IP-2), S-291(IP-3) Culvert Reconstruction\070 - Plans\IP-3\14 Mechanical\M-02

SAFETY ON THIS JOB DEPENDS ON YOU

NOTES:

1. ALL MACHINE SCREWS USED SHALL BE STAINLESS STEEL AND TAMPER RESISTANT TYPE, W/ STAINLESS STEEL WASHERS AND STAINLESS STEEL SELF-LOCKING HEX NUTS.
2. ALL BOLTS, NUTS, AND WASHERS SHALL BE STAINLESS STEEL.
3. PIANO HINGE SHALL BE MOUNTED TO ENCLOSURE WITH NO. 10 MACHINE SCREWS @ 4" OC IN BOTH LEAFS.
4. MATERIAL QUANTITIES AND DETAILS SHOWN ARE FOR THE LAKESIDE AND LANDSIDE STILLING WELLS. AN ADDITIONAL PARTS LIST IS ON DWG M-04.
5. FOR ELECTRONIC COMPONENTS, SEE KEY NOTES ON DWG M-04.

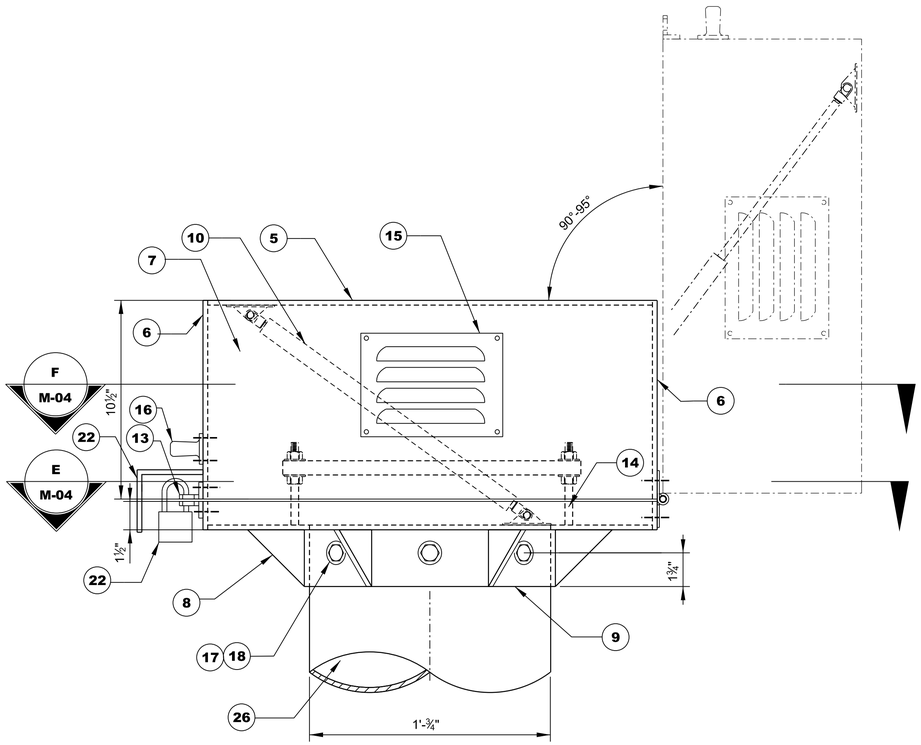

1 M-01 M-02 **DETAIL**
SCALE: A

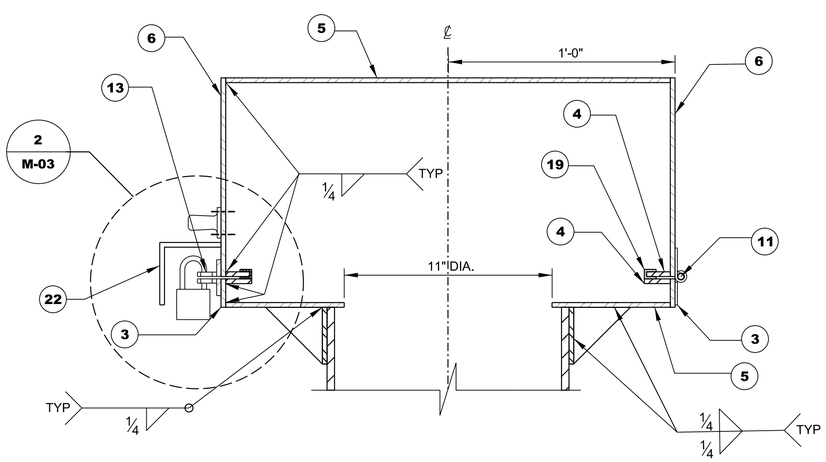

B M-01 M-02 **SECTION**
SCALE: A

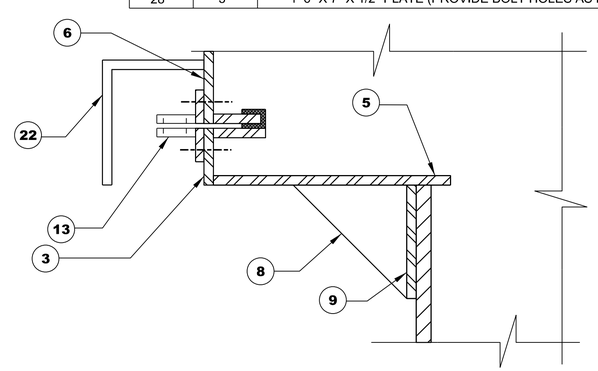

2 M-03 **DETAIL**
SCALE: N.T.S.

PARTS LIST

◯	QTY	NOMENCLATURE OR DESCRIPTION	MATERIAL SPECIFICATION
1	2	1 ½" x 24" x ¼" PLATE	5083-0 ALUMINUM
2	4	1 ⅜" x 20 ¾" x ¼" PLATE	5083-0 ALUMINUM
3	2	1 ½" x 23 ½" x ¼" PLATE	5083-0 ALUMINUM
4	4	1 ⅜" x 23 ½" x ¼" PLATE	5083-0 ALUMINUM
5	2	23 ½" x 23 ½" x ¼" PLATE	5083-0 ALUMINUM
6	2	10 ½" x 23 ½" x ¼" PLATE	5083-0 ALUMINUM
7	2	10 ½" x 24 ¼" x ¼" PLATE	5083-0 ALUMINUM
8	6	GUSSET: 3" x 3" x ¼" PLATE	5083-0 ALUMINUM
9	1	COLLAR: 3" WIDE, 12 ⅞" ID, ¼" PLATE W/ ⅝" HOLES	5083-0 ALUMINUM
10	1	GAS SPRING, OPEN ASSIST: 26 ⅜" EXT LENGTH	STAINLESS STEEL
11	1	PIANO HINGE: 3" WIDTH, ⅜" PIN Ø, ⅛" THK LEAF	STAINLESS STEEL,T316
12	1	INSTRUMENT BOARD: ¾" x 4" x 16"	STARBOARD POLYMER
13	1	PADLOCK EYE: 90° ANGLE, ¼" THICK, ⅝" EYE ID	STAINLESS STEEL
14	2	⅜-16 X 4 ½" THREADED STUD W/ 2 NUTS & 2 WASHERS	STAINLESS STEEL
15	2	LOUVER: 5 ½" x 7 ½" W/ SST INSECT SCREEN	STAINLESS STEEL
16	2	HANDLE: 1" x ⅝" GRIP, 2" PROJECTION, 6 ⅝" LG	STAINLESS STEEL
17	6	FLAT HEAD BOLT: ½"-13 x 1 ½", W/ FLAT WASHER	STAINLESS STEEL
18	6	SELFLOCKING NUT: ½"-13, W/ NYLON INSERT	STAINLESS STEEL
19	8LF	EDGE TRIM: ¼" INNER WIDTH, ⅝" LG, ½" WIDE	NEOPRENE
20	10	⅞" U-BOLT WITH NUTS AND WASHERS	STAINLESS STEEL
21	20	¾" SST WEDGE TYPE ANCHOR BOLTS	STAINLESS STEEL
22	1	COMBINATION PADLOCK AND PROTECTOR GRAINGER PART NOS.	1U172 & 4AXZ7
23	1	12" PIPE FLANGE SLIP ON WELDED	STAINLESS STEEL
24	1	⅜" BLIND FLANGE PLATE	STAINLESS STEEL
25	6	⅜" X 3" FLANGE BOLTS	STAINLESS STEEL
26	1	12 INCH WELL CASING	STAINLESS STEEL
27	12	3/4" ROD WITH THREADED ENDS WITH NUTS AND WASHERS	STAINLESS STEEL
28	3	1'-6" X 7" X 1/2" PLATE (PROVIDE BOLT HOLES AS REQUIRED)	STAINLESS STEEL

GRAPHIC SCALE
"A" 0 3" 6" 12"

US Army Corps of Engineers
Jacksonville District

No.	SYM	ZONE	DESCRIPTION

DEPARTMENT OF THE ARMY
CORPS OF ENGINEERS
JACKSONVILLE DISTRICT
JACKSONVILLE, FLORIDA

DESIGNED BY: M.D. | DATE: MARCH 2015
DWN BY: J.D.H. | CKD BY: S.J.P. | SOLICITATION NO.: W912EP-16-R-0010
SUBMITTED BY: N/A | CONTRACT NO.: N/A
PLOT SCALE: AS SHOWN | PLOT DATE: Apr 25, 2014 | FILE NUMBER: N/A
FILE NAME: 114527-HHDRCRIP3-MI503.DGN

HERBERT HOOVER DIKE REHABILITATION PROJECT
STRUCTURE REPLACEMENTS
S-291 (IP-3) RECONSTRUCTION
MECHANICAL
STILLING WELL
SECTIONS AND DETAILS

DRAWING NO.
M-03

pw:\\COE-SAJPWP02JAX.saj.ds.usace.army.mil:SAJPW\Documents\C&SF\Herbert Hoover Dike Rehabilitation\03-Culvert Rehabilitation\S-292(IP-1), S-290(IP-2), S-291(IP-3) Culvert Reconstruction\070 - Plans\IP-3\14 Mechanical\M-03

SAFETY ON THIS JOB DEPENDS ON YOU

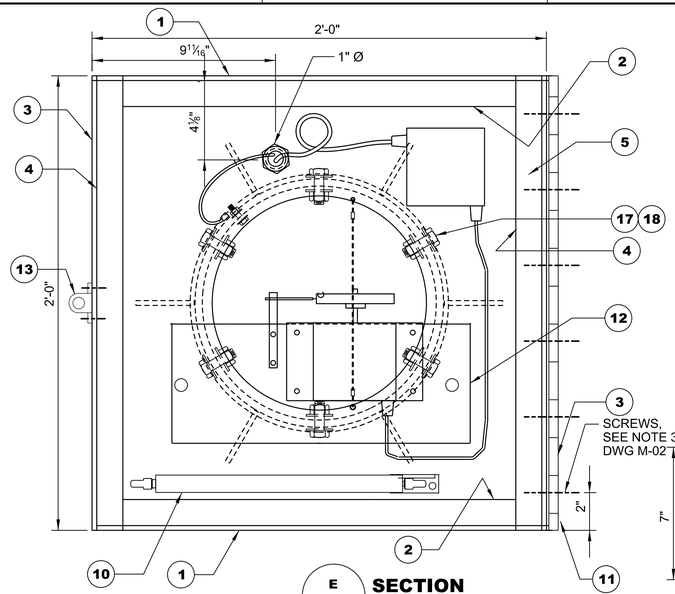

E M-03 **SECTION** SCALE: A

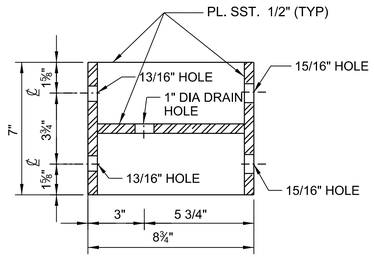

G M-04 **SECTION** SCALE: A

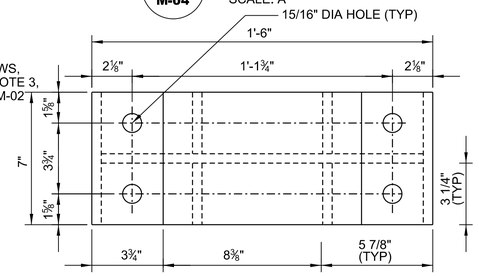

H M-04 **SECTION** SCALE: A

NOTES

1. FOR FEATURES NOTED USING A CIRCLE CALLOUT (#), REFER TO DRAWING M-03 FOR THE SCHEDULE.
2. THESE DETAILS SHALL BE APPLIED TO THE LAKESIDE AND LANDSIDE STILLING WELLS, WITH THE EXCEPTION OF DETAIL C WHICH IS FOR THE LAKESIDE STILLING WELL ONLY AND DETAIL D IS FOR THE LANDSIDE STILLING WELL ONLY.

KEY NOTES:

⬡	QUANTITY PER STILLING WELL	DESCRIPTION	MODEL/NAME	REMARKS
1	1	ALUMINUM ENCODER ENCLOSURE	SEE DRAWING M-02	
2	1	4" X 4" X 2" PLASTIC NEMA 4 JUNCTION BOX		
3	1 SUTRON	INCREMENTAL ENCODER	SUTRON 56-0540	
4	==	INSTRUMENT ISOLATION BOARD	STARBOARD, OR EQUAL	
5	2	½" STRAIGHT STRAIN RELIEF CORD CONNECTOR	THOMAS AND BETTS #2672 OR EQUAL	
6	1	4 PIN CONNECTOR	CONXALL CXS3106A14S2S300	
7	==	--	--	
8	1	⅛" X 12" SS AIRCRAFT CABLE WITH SS CRIMP SLEEVES (2)		
9	AS REQUIRED	1" CONDUIT AND FITTINGS		
10	AS REQUIRED	SENSOR WIRE		
11	==	--		
12	==	--		
13	==	--		
14	1 SUTRON	INCREMENTAL ENCODER PULLEY: 4" DIAMETER, INSULATED	HIF - 5306002	
15	1 (CR10 OPTION)	13.5"W X 18"D X 8.2"H NEMA 4X,WHITE,FRP,CR10 ENCLOSURE	CAMPBELL SCIENTIFIC ENC 12/14 #13719	NOT SHOWN
16	1 (CR10 OPTION)	40 AH BATTERY		NOT SHOWN
17	1	TAPE INDICATOR: INSIDE GAGE 5307015	HYDRAULIC INSTRUMENTATION FACILITY USGS	
18	1 (BALLUFF OPTION)	LINEAR POSITION TRANSDUCER	BALLUFF BTL-5-E17-M3048-2-SU034-K05	NOT SHOWN
19	1	S.S. FLOAT TAPE: MARKED INCREMENTS OF 0.01 FT.	DESIGN ANALYSIS H-262-25	
20	1	S.S. FLAT WEIGHT: 10 OZ. MIN.	DESIGN ANALYSIS H-262-10	
21	2	FLOAT END AND WEIGHT HOOKS	HIF 530612	
22	1	FLOAT		

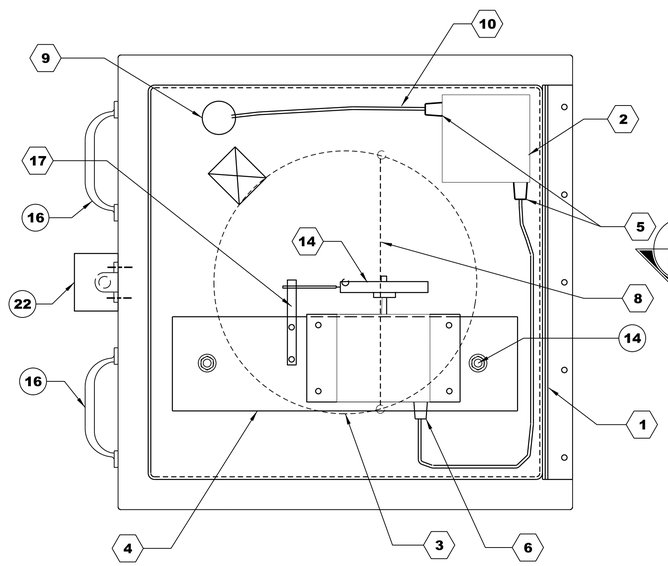

F M-03 **SECTION** SCALE: A

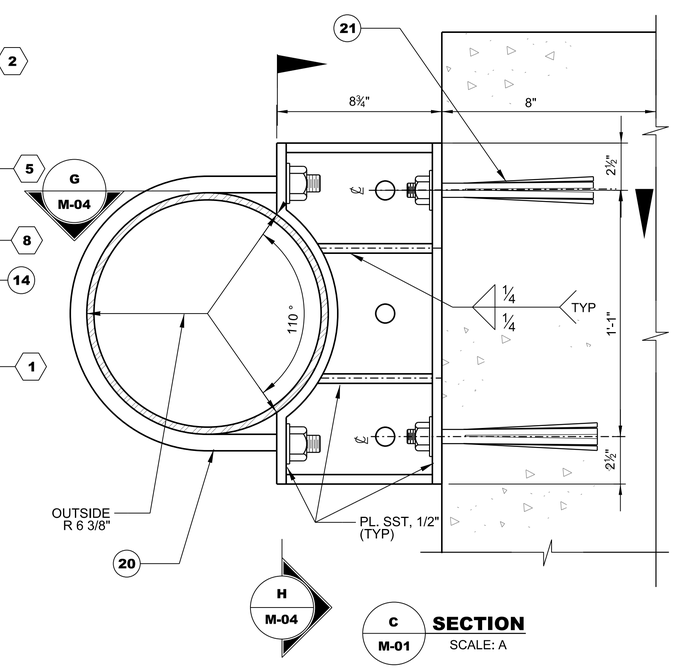

C M-01 **SECTION** SCALE: A

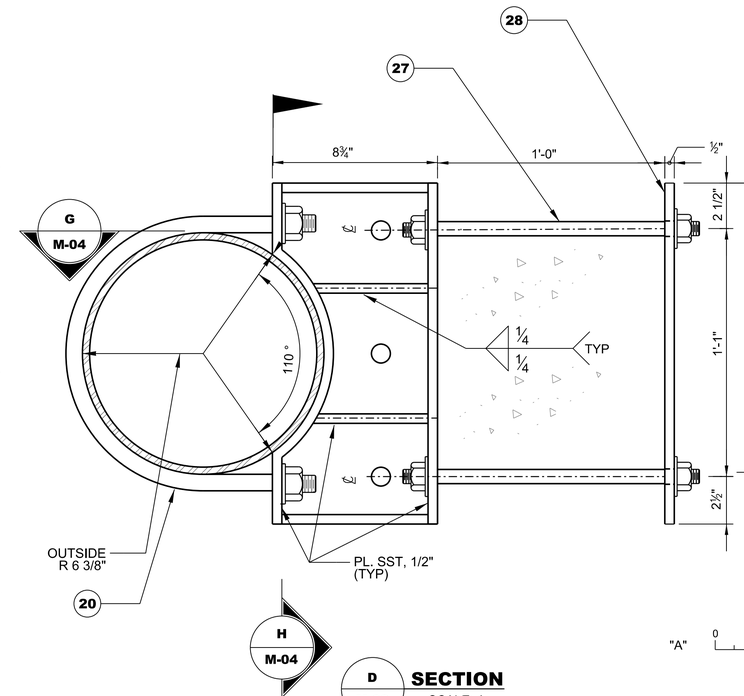

D M-02 **SECTION** SCALE: A

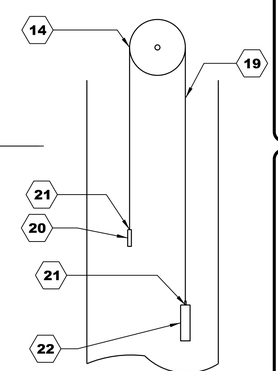

SCHEMATIC TAPE AND ENCODER
NTS

GRAPHIC SCALE
"A" 0 3" 6" 12"

US Army Corps of Engineers, Jacksonville District

No.	SYM	ZONE	DESCRIPTION

DEPARTMENT OF THE ARMY
CORPS OF ENGINEERS
JACKSONVILLE DISTRICT
JACKSONVILLE, FLORIDA

DESIGNED BY: M.D. | DATE: MARCH 2015
DWN BY: J.D.H. | CKD BY: S.J.P. | SOLICITATION NO.: W912EP-16-R-0010
SUBMITTED BY: N/A | CONTRACT NO.: N/A
PLOT SCALE: AS SHOWN | PLOT DATE: Apr 25, 2014 | FILE NUMBER: N/A
FILE NAME: 114527-HHDRCRIP3-MI304.DGN

HERBERT HOOVER DIKE REHABILITATION PROJECT
STRUCTURE REPLACEMENTS
S-291 (IP-3) RECONSTRUCTION
MECHANICAL
STILLING WELL SECTIONS AND SCHEMATIC

DRAWING NO.
M-04

pw:\\COE-SAJPWP02JAX.saj.ds.usace.army.mil:SAJPW\Documents\C&SF\Herbert Hoover Dike Rehabilitation\03-Culvert Rehabilitation\S-292(IP-1), S-290(IP-2), S-291(IP-3) Culvert Reconstruction\070 - Plans\IP-3\14 Mechanical\M-04

SAFETY ON THIS JOB DEPENDS ON YOU

ELECTRICAL SYMBOL LEGEND

(NOT ALL SYMBOLS WILL APPLY TO THIS PROJECT)

PLAN

- LP-1/3/5 — HOME RUN TO PANEL "LP". CIRCUITS #1/3/5. CROSS MARKS INDICATE NUMBER OF CONDUCTORS. LONGER MARK INDICATE NEUTRAL.
- EXPOSED CONDUIT
- CONDUIT RUN UNDERGROUND OR IN CONCRETE
- CONDUIT RUN - CHANGE IN ELEVATION
- CONDUIT BENDS TOWARD OBSERVER
- CONDUIT BENDS AWAY FROM OBSERVER
- CONDUIT CAPPED
- S — SINGLE POLE SWITCH
- 15A, 125V, DUPLEX RECEPTACLE, NEMA 5-15R
- DISCONNECT SWITCH
- M — MOTOR, HORSEPOWER AS SHOWN
- TX — TRANSFORMER
- H — HEATER
- A — AIR TERMINAL
- IR — IR MOTION DETECTOR
- BALANCED MAGNETIC SWITCH
- SECURITY ALARM HORN
- KEYPAD
- GROUND ROD, ¾" X 10'
- GROUND ROD CONNECTION
- GROUND CONNECTION
- EXISTING POLE
- NEW POLE
- EXISTING POLE TO BE REMOVED
- EXISTING TRANSFORMER
- NEW TRANSFORMER
- EXISTING GUY
- NEW GUY
- P — DUCTBANK FOR UNDERGROUND ELECTRICAL SERVICE TO PUMPS
- F — DUCTBANK FOR UNDERGROUND FIBER OPTIC CABLE
- M — DUCTBANK FOR UNDERGROUND MONITORING WELL, CAMERA, AND PUMP RECEPTACLE POWER WIRING
- C — DUCTBANK FOR UNDERGROUND CONTROL WIRING
- I — DUCTBANK FOR UNDERGROUND INJECTION WELL POWER WIRING
- NT — NEW OVERHEAD TELEPHONE LINE
- T — EXISTING OVERHEAD TELEPHONE LINE
- NT — EXISTING UNDERGROUND TELEPHONE LINE
- T — NEW UNDERGROUND TELEPHONE LINE
- NE — NEW OVERHEAD FPL POWER LINE
- E — EXISTING OVERHEAD FPL POWER LINE
- ES — NEW ELECTRICAL SECONDARY UNDERGROUND
- P-1 — POLE DESIGNATION NUMBER: E=EXISTING POLE P=NEW POLE
- J1 — "J" JUNCTION BOX OR FITTING "H" ELECTRICAL HANDHOLE "M" MONITORING WELL PANEL
- T — GROUNDING TEST WELL

SCHEMATIC DIAGRAM

- NORMALLY OPEN CONTACT
- NORMALLY CLOSED CONTACT
- NORMALLY OPEN PUSH-BUTTON MOMENTARY CLOSE
- NORMALLY CLOSED PUSH-BUTTON MOMENTARY OPEN
- SINGLE POLE TOGGLE SWITCH, ("ON-OFF", ETC.)
- GROUND CONNECTION
- OL — (MAGNETIC) OVERLOAD RELAY CONTACTS
- M — MOTOR
- PRESSURE SWITCH
- HEATER
- N.O. LIMIT SWITCH
- 42 — MOTOR STARTER RELAY (42) O=OPEN, C=CLOSE
- R — INDICATING LIGHT: G=GREEN, R=RED, Y=YELLOW, B=BLUE
- CROSSING OF CONDUCTORS, NOT CONNECTED
- CONNECTION OF CONDUCTORS, FITTING AS REQUIRED
- AIR CIRCUIT BREAKER
- DISCONNECT SWITCH
- FUSE
- FUSED DISCONNECT SWITCH
- OVERLOAD COIL
- MAGNETIC OVERLOAD
- COMPONENTS OR DEVICES LOCATED AT MCC
- COMPONENTS OR DEVICES LOCATED AT EQUIPMENT
- TS — TRANSIENT SUPPRESSOR
- CONTROL TRANSFORMER

SINGLE LINE DIAGRAM

- 50A — MOLDED CASE CIRCUIT BREAKER, 2 POLE UNLESS OTHERWISE NOTED: 50A - TRIP RATING IN AMPERE
- ELECTRICAL ENCLOSURE OUTLINE
- 30A — AS NOTED 2 POLE UNLESS NON-FUSED DISCONNECT SWITCH, SIZE OTHERWISE NOTED
- 30A — FUSED DISCONNECT SWITCH, SIZE AS NOTED, 2 POLE UNLESS OTHERWISE NOTED
- MTR — MOTOR HP AS SHOWN 3 PHASE UNLESS NOTED
- OTS — OPEN TORQUE SWITCH
- CTS — CLOSE TORQUE SWITCH
- OLS — OPEN LIMIT SWITCH
- CLS — CLOSE LIMIT SWITCH
- GIL — GREEN INDICATING LIGHT
- RIL — RED INDICATING LIGHT
- YIL — YELLOW INDICATING LIGHT
- BIL — BLUE INDICATING LIGHT
- MC O — MAGNETIC CONTACTOR, OPEN
- MC C — MAGNETIC CONTACTOR, CLOSE
- MT WV — MANUAL TRANSFER DEVICE, WATER VALVE
- A — ANMETER
- V — VOLTMETER
- W — WATTMETER
- F — FREQUENCY METER
- DM — DIGITAL METER
- TVSS — TRANSIENT VOLTAGE SURGE SUPPRESSOR AND ARRESTER
- PUSH BUTTONS WITH INDICATOR LIGHTS
- TRANSFORMER, SIZE AS SHOWN

US Army Corps of Engineers, Jacksonville District

No.	SYM	ZONE	DESCRIPTION

DESIGNED BY: V.L. | DATE: OCTOBER 2015
DWN BY: J.D.H. | CKD BY: S.J.P. | SOLICITATION NO.: W912EP-16-R-0010
SUBMITTED BY: N/A | CONTRACT NO.: N/A
PLOT SCALE: N/A | PLOT DATE: Apr 25, 2016 | FILE NUMBER: N/A
FILE NAME: 114527-HHDRCRIP3-E-001.DGN

DEPARTMENT OF THE ARMY
CORPS OF ENGINEERS
JACKSONVILLE DISTRICT
JACKSONVILLE, FLORIDA

HERBERT HOOVER DIKE REHABILITATION PROJECT
STRUCTURE REPLACEMENTS
S-291 (IP-3) RECONSTRUCTION
ELECTRICAL
SYMBOL LEGEND

DRAWING NO.
E-01

pw:\\COE-SAJPWP02JAX.saj.ds.usace.army.mil:SAJPW\Documents\C&SF\Herbert Hoover Dike Rehabilitation\03-Culvert Rehabilitation\S-292(IP-1), S-290(IP-2), S-291(IP-3) Culvert Reconstruction\070 - Plans\IP-3\15 Electrical\E-01

SAFETY ON THIS JOB DEPENDS ON YOU

PROJECT ABBREVIATIONS

A	AMPERES
AF	AMP FRAME
AFF	ABOVE FINISH FLOOR
AFG	ABOVE FINISH GRADE
AHU	AIR HANDLING UNIT
AIC	AMPERE INTERRUPTING CURRENT
AM	AMMETER
AOL	ANNUNCIATOR ON LIGHT
AS	AMMETER SWITCH
AT	ANNUNCIATOR TEST, AMP TRIP
BC	BARE COPPER WIRE TYPE BC1
BK	BLACK
BKR	BREAKER
BL	BLUE
BMS	BALANCED MAGNETIC SWITCH
BMWS	BISTATIC MICROWAVE SENSOR
BN	BROWN
C	CLOSE, CONDUIT
CDB	CONCRETE DUCT BANK
CGB	COMMUNICATIONS GROUND BAR
CP	CONTROL PANEL
CR	CONTROL RELAY
CS	CIRCUIT BREAKER CONTROL SWITCH
CT	CURRENT TRANSFORMER
CTB	CURRENT TEST BLOCK
DC	DIRECT CURRENT
DPM	DIGITAL POWER MONITOR
DS	DISCONNECT SWITCH
E	EAST
EBC	ENGINE BATTERY CHARGER
EL	ELEVATION
ELEC	ELECTRICAL
EM	ELECTRIC MOTOR
EW	EXTRACTION WELL
EWH	ELECTRIC WATER HEATER
EXT	EXTERIOR
FLR	FLOOR
FPL	FLORIDA POWER AND LIGHT
G,GN	GREEN, GROUND
GB	GROUND BAR
GFI	GROUND FAULT CIRCUIT INTERRUPTER
GND	GROUND
HP	HORSEPOWER
HVAC	HEATING, VENTILATION, AIR CONDITIONING
HZ	HERTZ
I&C	INSTRUMENTATION AND CONTROLS
IRH	INFRARED HEATER
IW	INJECTION WELL
JB	JUNCTION BOX
JWH	JACKET WATER HEATER
KVA	KILOVOLT AMPERES
KVAR	KILOVAR
KVH	KILOVARHOUR
KW	KILOWATTS
KWH	KILOWATTHOUR
LA	LIGHTNING ARRESTOR
LOR	LOCAL-OFF-REMOTE, LOCKOUT RELAY
LTS	LIGHTS
LV	LOW VOLTAGE (600V OR LESS)

MBP	MANUAL BYPASS
MCB	MAIN CIRCUIT BREAKER
MCC	MOTOR CONTROL CENTER
MCP	MAIN CONTROL PANEL
MECH	MECHANICAL
MOD	MOTOR OPERATED DAMPER
MOV	MOTOR OPERATED VALVE
MS	MOTOR STARTER
MW	MONITORING WELL
N	NORTH
N.C.	NORMALLY CLOSED
N.O.	NORMALLY OPEN
N/A	NOT APPLICABLE
NIC	NOT IN CONTRACT
NTS	NOT TO SCALE
O	ORANGE
OAS	OFF-AUTO SWITCH
OHE	OVERHEAD UTILITY
OL	OVERLOAD
OPER	OPERATING
1 PH	SINGLE PHASE
3 PH	THREE PHASE
P	POLE
PLC	PROGRAMMABLE LOGIC CONTROLLER
P/S	POWER SUPPLY
PF	POWER FACTOR
PFC	POWER FACTOR CAPACITOR
PT	POTENTIAL TRANSFORMER
PTT	PUSH TO TEST
PU	PICK-UP
R	RACEWAY, RED
REC	RECEPTACLE
REF	REFRIGERATOR
RTM	RUNTIME METER
RGS	RIGID GALVANIZED STEEL
S	SOUTH
SCC	STATION CONTROL PANEL
SLC	STRUCTURE LOCAL CONTROL
SP	SPARE
SST	SOLID-STATE TRIP
ST	SHUNT TRIP
SW	SWITCH
T	TRANSFORMER
TP	TELEPHONE DISTRIBUTION PANEL
TS	TEMPERATURE SWITCH
TVSS	TRANSIENT VOLTAGE SURGE SUPPRESSOR
TYP	TYPICAL
UGE	UNDERGROUND UTILITY
UPS	UNINTERRUPTIBLE POWER SUPPLY
V	VOLTS
VAC	AC VOLTS
VDC	DC VOLTS
VM	VOLTMETER
VR	VIBRATION RELAY
VRS	VOLTAGE REGULATOR AUTO-OFF-MANUAL SWITCH
VS	VOLTMETER PHASE SELECTING SWITCH
W	WHITE, WIRE, WEST
WHD	KILOWATT HOUR METER WITH DEMAND REGISTER
WM	WATTMETER
WP	WEATHERPROOF
XFMR	TRANSFORMER
Y	YELLOW

LIGHTING FIXTURE SCHEDULE

TYPE	LAMP	VOLTAGE	DESCRIPTION	MOUNTING STYLE AND HEIGHT
(A)	LED	120V	59LED 59 WATTS, 4100K CRI 65, 55" IMPACT-RESISTANT POLYCARBONATE HOUSING, ENCLOSED AND GASKETED, 20-GAUGE STEEL CHANNEL AND COVER, CLEAR IMPACT-RESISTANT POLYCARBONATE LENS, ASYMMETRIC (ASY) DIST.	SURFACE MOUNTED TO CONTROL BUILDING CEILING
(C)	LED	120V	63LED 74 WATTS, 4100K CRI 65, ALUMINUM HOUSING, DARK BRONZE FINNISH, ENCLOSED AND GASKETED, TYPE III DIST, IMPACT-RESISTANT AND TEMPERED GLASS LENS WITH VANDAL GUARD, PHOTOCELL	CONTROL BUILDING EXTERIOR WALL MOUNTED 7'-6" AFF
(D)	LED	120V	63LED 108 WATTS, 4100K CRI 65, ALUMINUM HOUSING, DARK BRONZE FINNISH, ENCLOSED AND GASKETED, TYPE III DIST, IMPACT-RESISTANT AND TEMPERED GLASS LENS WITH VANDAL GUARD, INTEGRAL ARM, PHOTOCELL. 10' POLE, 4" ROUND ALUMINUM SHAFT, HINGED BASE WITH HANDHOLE, DARK BRONZE FINISH	POLE MOUNTED 10' HEIGHT AT LAKESIDE AND LANDSIDE OPERATING PLATFORM

GENERAL NOTES:

1. ALL ELECTRICAL WORK SHALL BE PERFORMED BY A LICENSED ELECTRICAL CONTRACTOR.
2. UTILITY WORK SUCH AS POWER LINE SHALL BE COORDINATED WITH THE CONTRACTING OFFICER'S REPRESENTATIVE AND UTILITY COMPANY.

   GLADES ELECTRIC COOPERATIVE, INC.
   P.O. BOX 519
   MOORE HAVEN , FL 33471-0519
   MARK GOODWIN
   TELEPHONE: 1-800-226-4024, EXT. 6216
3. CONTRACTOR SHALL BE RESPONSIBLE FOR ANY TEMPORARY UTILITY REQUIRED DURING THE CONTRACT AT NO COST TO GOVERMENT.
4. ALL WORK SHALL BE DONE BY CONTRACTOR UNLESS OTHERWISE NOTED.
5. ALL CONSTRUCTION WORK SHALL BE DONE IN A THOROUGH AND WORKMANLIKE MANNER IN ACCORDANCE WITH THE PLANS AND SPECIFICATIONS. THE LATEST EDITION OF THE NATIONAL ELECTRICAL CODE (NEC) AND NATIONAL ELECTRICAL SAFETY CODE (NESC) SHALL BE FOLLOWED EXCEPT WHERE LOCAL REGULATIONS ARE MORE STRINGENT IN WHICH CASE THE LOCAL REGULATIONS SHALL GOVERN.
6. WIRING DIAGRAM, ONE-LINE DIAGRAM, CONDUIT AND CIRCUIT SCHEDULES, AND ELECTRICAL PLANS SHALL BE WORKED TOGETHER. CONTRACTOR SHALL BE RESPONSIBLE TO COORDINATE LAYOUTS AND INSTALLATION OF EQUIPMENT IN ACCORDANCE WITH MANUFACTURER'S DATA FOR PROPER FUNCTIONING OF ALL SYSTEMS.
7. COORDINATE EXPOSED CONDUIT INSTALLED ON STRUCTURE ACCORDINGLY AND MAINTAIN SAFE OPERATION REQUIREMENTS BY NEC AND NESC. NO CONDUIT SHALL BE INSTALLED ON HANDRAIL, LADDER, OR SIMILAR FEATURES UNLESS OTHERWISE NOTED. CONDUIT SHALL BE ROUTED INSIDE BUILDING IF POSSIBLE. CONDUIT INSTALLED IN FINISHED INTERIOR AREAS SHALL BE CONCEALED FROM VIEW.
8. ALL EXPOSED CONDUIT SHALL BE PVC COATED RGS. ALL BURIED OR EMBEDED CONDUIT SHALL BE PVC SCHEDULE 80. USE PVC SCHEDULE 80 ENCASED IN CONCRETE FOR PRIMARY POWER LINE AND WHERE BURIED AND SUBJECT TO VEHICULAR TRAFFIC. PROVIDE FLEXIBLE CONDUIT TERMINATIONS TO HOIST ASSEMBLY.
9. IN THE AREAS WHERE CABLES CROSS GAS, SEWAGE AND OTHER UTILITY FACILITIES, SERVICE CABLE SHALL BE PROTECTED BY PVC SCH 80 PLASTIC CONDUIT AND KEPT AT A MINIMUM SEPARATION OF 13 INCHES FROM THE OTHER UTILITY LINES.
10. INSTRUMENTATION WIRING SHALL BE SEPARATED FROM POWER WIRING. MINIMUM DISTANCE ALLOWED BETWEEN POWER WIRING CONDUIT AND INSTRUMENTATION WIRING CONDUIT INSTALLED PARALLEL SHALL BE 12 INCHES. POWER WIRING CONDUIT SHALL ONLY CROSS INSTRUMENTATION WIRING CONDUIT PERPENDICULARLY AT RIGHT ANGLES WITH 6 INCHES SEPARATION.
11. PROVIDE CONDUIT SEALING WITH PUTTY MATERIAL AT ALL CONDUIT PENETRATIONS THROUGH WALLS, ENCLOSURES OR PANELS.
12. ALL CONDUCTORS SHALL BE COPPER WITH XHHW2 OR EPR, 10 AWG OR LARGER UNLESS OTHERWISE SPECIFIED.
13. ALL CONDUCTORS IN SIZE OF #12 AWG AND LARGER SHALL BE COLOR CODED INSULATION.
14. ALL CIRCUIT BREAKERS SHALL BE ABLE TO ACCEPT LOCKOUT DEVICES.
15. MAXIMUM RESISTANCE-TO-GROUND OF GROUNDING SYSTEM SHALL NOT EXCEED FIVE OHMS UNDER DRY CONDITIONS. SEE SPECIFICATIONS.
16. PROVIDE RAINPROOF CONCRETE PULL BOX, AS REQUIRED, WITH COVER, NEMA 4X. PULL BOX SHALL BE FLUSH WITH SIDEWALKS OR CURBS OR PLACED ON GRADED GROUND LEVEL AND SIZED IN ACCORDANCE WITH NEC AND NESC OR FPL REQUIREMENTS.
17. WHERE CONCENTRIC RING KNOCKOUTS ARE BEING UTILIZED, PROVIDE BONDING JUMPERS FROM BUSHING TO ENCLOSURE.
18. CONTRACTOR SHALL PERFORM LOCKOUT TAGOUT DURING ELECTRICAL WORK.
19. CONTRACTOR SHALL PROVIDE PROPER GROUNDING TO ALL EXTERIOR METAL PARTS INCLUDING METAL FRAMES (SUCH AS DOOR, WINDOW, EXHAUST FAN, AND ETC.) AND ALL THE RAILINGS AT THE STRUCTURE.
20. ALL MOUNTING HEIGHTS ARE APPROXIMATELY TO THE BOTTOM OF FIXTURE. CONTRACTOR SHALL MAKE ADJUSTMENTS AS NECESSARY TO ACCOMMODATE THE STRUCTURE.
21. LIGHT POLE, CAMERA POLE, AND ANTENNA POLE SHALL MEET WIND LOAD CRITERIA. SEE SPECIFICATIONS.
22. ALL ELECTRICAL AND CONTROL ENCLOSURES OR PANELS LOCATED OUTSIDE THE STRUCTURE SHALL BE ABLE TO ACCEPT PADLOCK. PROVIDE SAME KEY FOR ALL PADLOCKS. SEE SPECIFICATIONS.
23. EXTERIOR ENCLOSURES OR PANELS SHALL BE NEMA 4X AND STAINLESS STEEL.
24. PROVIDE PROTECTIVE BOLLARDS FOR UTILITY HANDHOLE AS REQUIRED BY LOCAL UTILITY.

US Army Corps of Engineers
Jacksonville District

No.	SYM	ZONE	DESCRIPTION

DEPARTMENT OF THE ARMY
CORPS OF ENGINEERS
JACKSONVILLE DISTRICT
JACKSONVILLE, FLORIDA

DESIGNED BY: V.L. | DATE: OCTOBER 2015
DWN BY: J.D.H. | CKD BY: S.J.P. | SOLICITATION NO.: W912EP-16-R-0010
SUBMITTED BY: N/A | CONTRACT NO.: N/A
PLOT SCALE: AS SHOWN | PLOT DATE: Apr 25, 2016 | FILE NUMBER: N/A
FILE NAME: 114527-HHDRCRIP3-E-02.DGN

HERBERT HOOVER DIKE REHABILITATION PROJECT
STRUCTURE REPLACEMENTS
S-291 (IP-3) RECONSTRUCTION
ELECTRICAL
ABREVIATIONS AND GENERAL NOTES

DRAWING NO.
E-02

pw:\\COE-SAJPW\P02JAX.saj.ds.usace.army.mil:SAJPW\Documents\C&SF\Herbert Hoover Dike Rehabilitation\03-Culvert Reconstruction\070 - Plans\IP-3\15 Electrical\E-02
S-292(IP-1), S-290(IP-2), S-291(IP-3) Culvert Reconstruction

SAFETY ON THIS JOB DEPENDS ON YOU

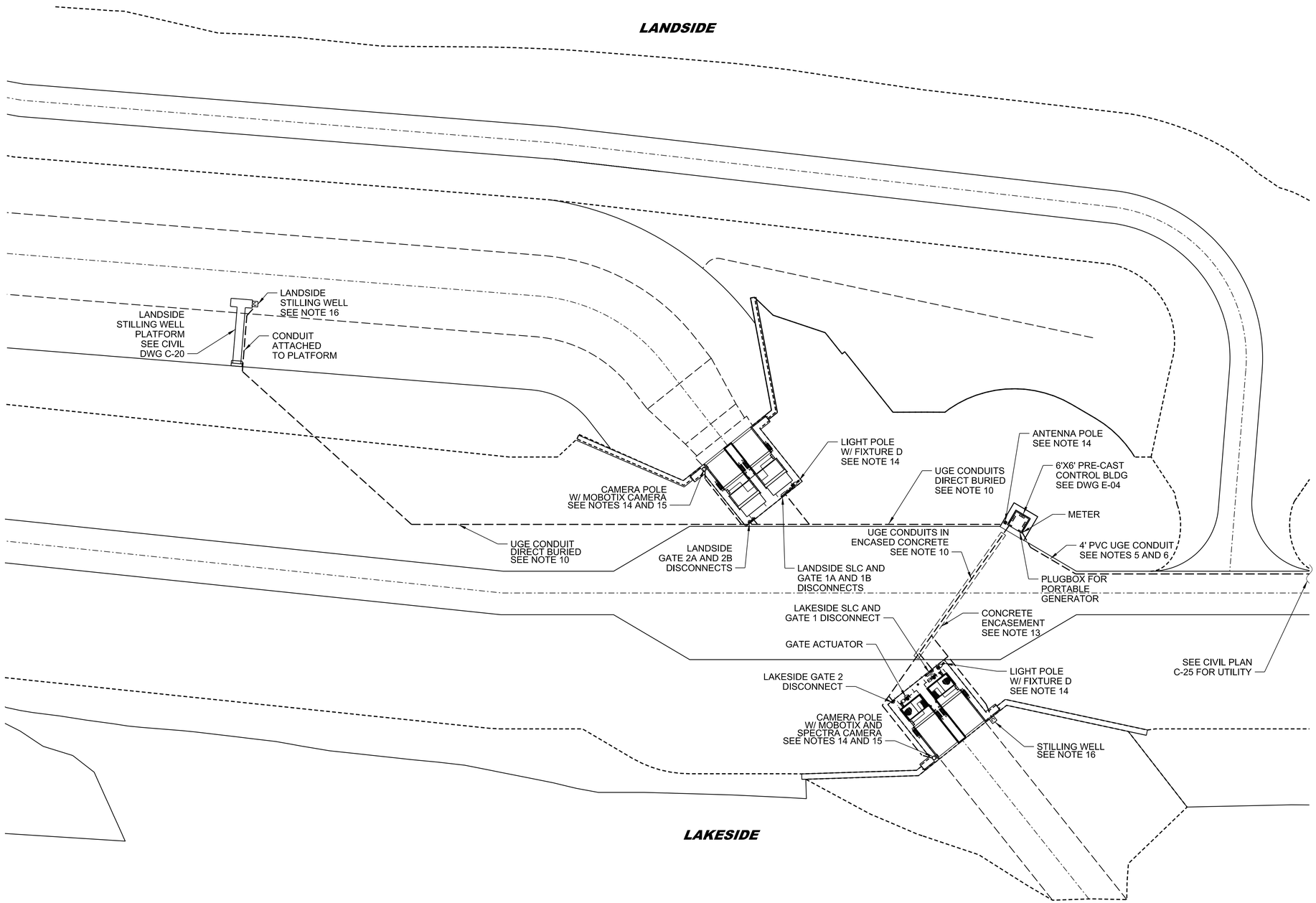

UTILITY SITE PLAN

SCALE: A

GRAPHIC SCALE

"A" 20' 0 20' 40'

NOTES:

1. FOR ELECTRICAL NOTES, LEGEND, AND ABBREVIATIONS, SEE DRAWINGS E-01 AND E-02.
2. FOR CONTROL BUILDING ELECTRICAL LAYOUT AND METER LOCATION, SEE DRAWING E-04. FOR OVERALL SITE LAYOUT AND STRUCTURE DETAILS, SEE CIVIL AND STRUCTURE DRAWINGS.
3. CONTRACTOR SHALL BE AWARE THAT IF COMMERCIAL POWER IS NOT AVAILABLE, CONTRACTOR SHALL SUPPLY A PORTABLE GENERATOR. CONTRACTOR SHALL BE RESPONSIBLE FOR ANY TEMPORARY UTILITIES REQUIRED DURING THE CONTRACT.
4. CONTRACTOR SHALL BE RESPONSIBLE FOR ALL WORK IN PREPARATION FOR CONNECTION TO COMMERCIAL POWER.
5. CONTRACTOR SHALL PROVIDE AND INSTALL UNDERGROUND CONDUITS AND CABLES PULL BOX, AND ETC. TO CONTROL BUILDING AS SHOWN ON DRAWING C-25. VERIFY THE SITE AND COORDINATE WITH THE UTILITY FOR ALL ELECTRICAL WORK.
6. UNDERGROUND CONDUITS SHALL BE PVC SCHEDULE 80. INSTALLATION OF CONDUITS SHALL COMPLY WITH THE MOST CURRENT VERSIONS OF NESC AND NEC OR MORE STRINGENT REQUIREMENTS BY THE UTILITY, IF REQUIRED.
7. CONTRACTOR SHALL PROVIDE AND INSTALL METER SOCKET, HANDHOLES, AND OTHER EQUIPMENT AS REQUIRED BY THE UTILITY STANDARDS.
8. CONTRACTOR SHALL PROVIDE PROPER GROUNDING CONNECTIONS TO ALL EXPOSED METAL EQUIPMENT.
9. CONTRACTOR SHALL COORDINATE WITH PROVIDED EQUIPMENT AND MAKE ADJUSTMENTS AS NECESSARY.
10. SEE DRAWINGS E-04 THRU E-15 FOR ELECTRICAL. SEE DRAWINGS T-01 THRU T-10 FOR TELECOMMUNICATIONS.
11. PROVIDE AND INSTALL EXTERIOR LIGHT AT THE LAKESIDE OF CULVERT STRUCTURE. SEE STRUCTURE PLAN FOR LIGHT POLE LOCATION. SEE DRAWING E-02 FOR LIGHTING FIXTURE SCHEDULE AND INSTALLATION NOTES.
12. PROVIDE PROPER PULL BOXES ALONG CONDUIT RUNS AS NECESSARY FOR CABLE ROUTING
13. CONDUIT SHALL BE ENCASED IN CONCRETE FOR AREAS SUBJECT TO VEHICULAR TRAFFIC. SEE ELECTRICAL DETAIL DRAWING.
14. COORDINATE WITH CIVIL AND STRUCTURAL PLANS FOR POLE SETTING, POLE BASE ANCHORING, AND UNDERGROUND CONDUIT ROUTING FOR ALL REQUIRED ELECTRICAL AND TELECOMMUNICATIONS WORK. ALL WORK SHALL BE PLANNED AHEAD PROPERLY BEFORE POURING CONCRETE.
15. REFERENCED MANUFACTURERS SHALL BE CONSIDERED "OR APPROVED EQUAL."
16. COORDINATE WITH MECHANICAL PLANS FOR STILLING WELL DETAILS.

US Army Corps of Engineers, Jacksonville District

No.	SYM	ZONE	DESCRIPTION

DEPARTMENT OF THE ARMY
CORPS OF ENGINEERS
JACKSONVILLE DISTRICT
JACKSONVILLE, FLORIDA

DESIGNED BY:		DATE:	
DWN BY: J.D.H.	CKD BY: S.J.P.	SOLICITATION NO.: W912EP-16-R-0010	
SUBMITTED BY: N/A		CONTRACT NO.: N/A	
PLOT SCALE: AS SHOWN	PLOT DATE: Apr 25, 2014	FILE NUMBER: N/A	
FILE NAME: 114527-HHDRCRIP3-ES103			

HERBERT HOOVER DIKE REHABILITATION PROJECT
STRUCTURE REPLACEMENTS

S-291 (IP-3) RECONSTRUCTION

ELECTRICAL
SITE PLAN

DRAWING NO.

E-03

pw:\\COE-SAJPWP02JAX.saj.ds.usace.army.mil:SAJPW\Documents\C&SF\Herbert Hoover Dike Rehabilitation\03-Culvert Rehabilitation\S-292(IP-1), S-290(IP-2), S-291(IP-3) Culvert Reconstruction\070 - Plans\IP-3\15 Electrical\E-03

SAFETY ON THIS JOB DEPENDS ON YOU

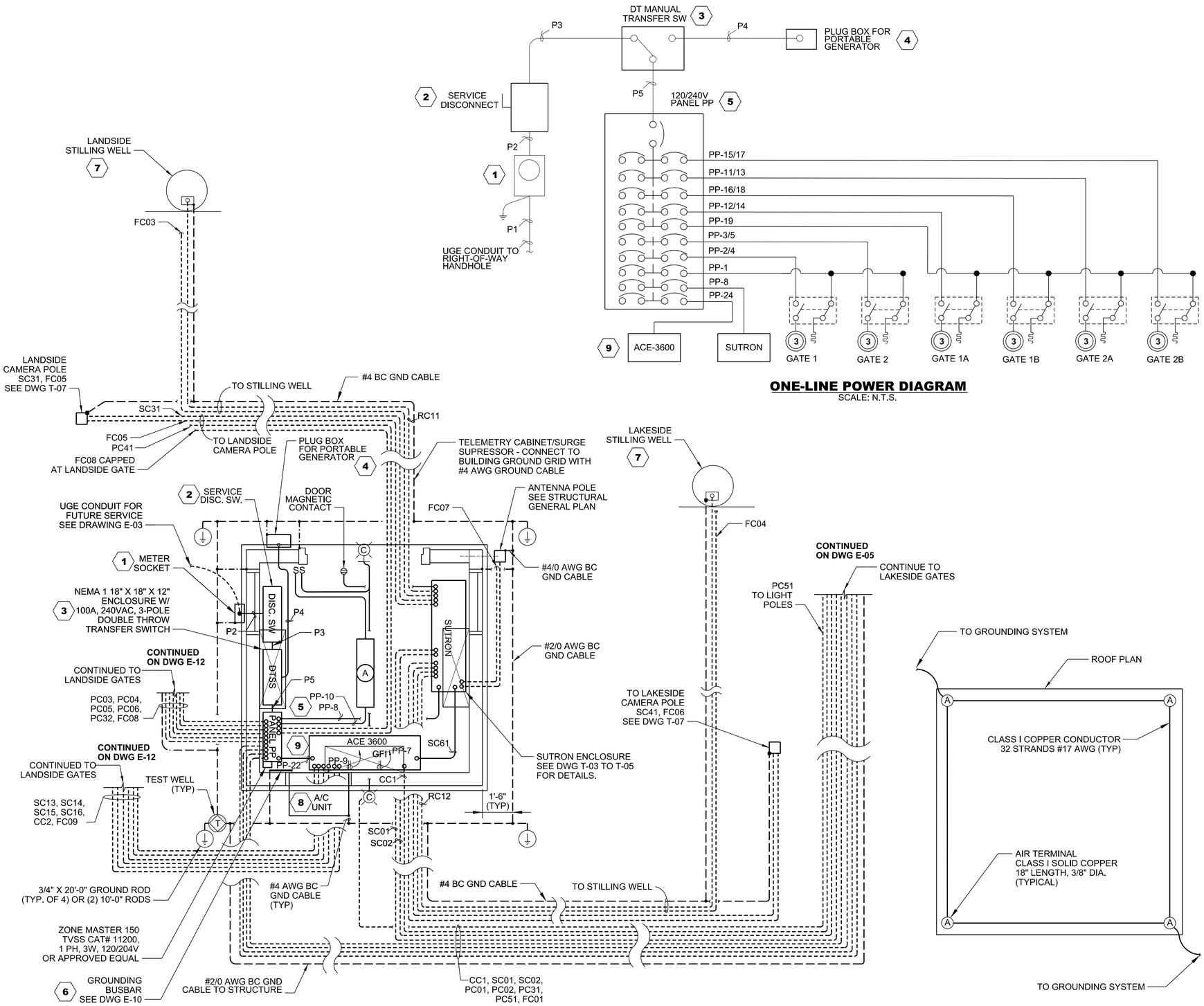

ONE-LINE POWER DIAGRAM

SCALE: N.T.S.

CONTROL BUILLDING ELECTRICAL LAYOUT

SCALE: N.T.S.

LIGHTNING PROTECTION

SCALE: N.T.S.

NOTES:

1. FOR UTILITY POINT OF CONNECTION, SEE DRAWING E-03. CONTRACTOR SHALL COORDINATE WITH ELECTRIC UTILITY TO INSTALL 1-PHASE, 240VAC, 100A SERVICE AND PERFORM ALL REQUIRED WORK AS STATED BY ELECTRIC UTILITY STANDARDS AND REGULATIONS.
2. SEE DRAWING E-02 FOR LIGHTING FIXTURE SCHEDULE AND INSTALLATION NOTES. PROVIDE PHOTOCELL FOR EXTERNAL LIGHTS.
3. LOCATIONS OF EQUIPMENT, PANELS ETC. ARE APPROXIMATE. CONTRACTOR SHALL VERIFY AND COORDINATE WITH PROVIDED EQUIPMENT.
4. CONTRACTOR SHALL BE RESPONSIBLE FOR INSURING A SUFFICIENT QUANTITY OF EMBEDS ARE INSTALLED TO MEET CONDUIT ROUTING REQUIREMENTS. CONTRACTOR SHALL COORDINATE INSTALLATION WITH STRUCTURAL CONTRACTOR.
5. SEE DRAWING E-09 AND E-10 FOR ELECTRICAL DETAILS.
6. SEE DRAWING T-01 THRU T-10 FOR TELECOMMUNICATIONS.
7. INSTRUMENT CABLE SHALL BE BELDEN 9883 OR CONTRACTING OFFICER APPROVED EQUAL.
8. SPARE CONDUIT FINISH ON BOTH ENDS PER SPECIFICATIONS.
9. CONTRACTOR SHALL BE RESPONSIBLE FOR PROPER DESIGN OF GATE ACTUATOR SYSTEM INCLUDING MOTOR H.P., OPERATOR CONTROL, STEM SIZE, LOAD AND THRUST OPERATION REQUIRED FOR SUFFICIENT GATE OPERATION AND SHALL MAKE ANY NECESSARY CHANGE TO CONDUIT, CABLE, BREAKER SIZE, DISCONNECT, ETC. TO ACCOMODATE THE INSTALLED EQUIPMENT TO ENSURE A FUNCTIONAL OPERATION SYSTEM.
10. LIGHTNING PROTECTION SYSTEM SHALL BE DONE IN ACCORDANCE WITH NFPA 780, STANDARD FOR THE INSTALLATION OF LIGHTNING PROTECTION SYSTEMS.

KEY NOTES:

1. FURNISH AND INSTALL AN OUTDOOR, 1-PHASE, 240VAC, 100A, NEMA 3R RATED METER ENCLOSURE. MOUNT CENTER OF METER ENCLOSURE 5 FT ABOVE FINISHED GRADE.
2. FURNISH AND INSTALL A SERVICE DISCONNECT -- HEAVY DUTY, FUSED SAFETY SWITCH RATED FOR SERVICE-ENTRANCE-USE, 240VAC, 100A, 1-PHASE, NEMA TYPE 1 ENCLOSURE. USE #4 AWG BARE COPPER CABLE TO GROUND THE SERVICE NEUTRAL. FUSE THE DISCONNECT AT 100A.
3. FURNISH AND INSTALL A 3-POLE, 240VAC, 100A, MANUALLY OPERATED, DOUBLE THROW TRANSFER SWITCH IN A NEMA TYPE 1 ENCLOSURE.
4. PROVIDE A 240V, 30A, 1-PH, MARINE-GRADED FEMALE TYPE PLUG, NEMA L14-30P, FOR PORTABLE GENERATOR. PLUG BOX SHALL BE NEMA 3R ENCLOSURE.
5. FURNISH AND INSTALL A 100A, 1-PHASE, 3-WIRE, NEMA 1 PANEL WITH MAIN BREAKER AND 30 POSITIONS, MINIMUM SHORT CIRCUIT CURRENT RATING OF 22KA (RMS SYMMETRICAL). SEE PANEL BOARD SCHEDULE FOR FEEDER BREAKER REQUIREMENTS. FILL ALL SPARE SPACES WITH 1-POLE, 20A BREAKERS.
6. PROVIDE COPPER GROUNDING BUSBAR FOR ALL GROUNDING TO EQUIPMENT ENCLOSURES, PANELS, AND CABINETS.
7. SEE MECHANICAL DRAWINGS FOR STILLING WELL DETAILS.
8. PROVIDE AND INSTALL A WALL MOUNTED A/C UNIT WITH 6,000 BTUH COOLING CAPACITY AND MININUM 10 ENERGY EFFICIENCY RATING (EER). THE UNIT SHALL HAVE THREE COOLING AND FAN SPEED SETTINGS AND DIGITAL THERMOSTAT. PROVIDE STAINLESS STEEL VANDAL-PROOF GUARD CAGE. SEE STRUCTURAL DRAWING FOR GUARD CAGE DETAILS AND COORDINATE WITH PROVIDED A/C EQUIPMENT FOR WALL OPENING DIMENSIONS.
9. PROVIDE A 36" X 30" X 12" NEMA 4 ENCLOSURE FOR MOTOROLA ACE-360 TELEMETRY SYSTEM (NIC) FOR FUTURE REMOTE OPERATION FROM THE SOUTH FLORIDA WATER MANAGEMENT DISTRICT (SFWMD). CABLES FED THROUGH INSIDE ACE-3600 ENCLOSURE FOR SFWMD FUTURE REMOTE OPERATION SHALL BE PROPERLY LABELED. PROVIDE ADDITIONAL 5 FEET FOR EACH CABLE AND ROLL UP CABLES NEATLY IN SEPARATE BUNDLES FOR SPECIFIC FUNCTION INSIDE THE ENCLOSURE.

US Army Corps of Engineers, Jacksonville District

No.	SYM	ZONE	DESCRIPTION

DEPARTMENT OF THE ARMY
CORPS OF ENGINEERS
JACKSONVILLE DISTRICT
JACKSONVILLE, FLORIDA

DESIGNED BY: V.L.
DWN BY: J.D.H.
CKD BY: S.J.P.
SUBMITTED BY: N/A
PLOT SCALE: N/A
PLOT DATE: Apr 25, 2014
DATE: OCTOBER 2015
SOLICITATION NO.: W912EP-16-R-0011
CONTRACT NO.: N/A
FILE NUMBER: N/A
FILE NAME: 114527-HHDRCRIP2-EP104.DGN

HERBERT HOOVER DIKE REHABILITATION PROJECT
STRUCTURE REPLACEMENTS

S-290 (IP-2) RECONSTRUCTION

ELECTRICAL
STRUCTURAL ELECTRICAL PLAN
SHEET 1

DRAWING NO.
E-04

pw:\\COE-SAJ.PWP02JAX.saj.ds.usace.army.mil:SAJ\PW\Documents\C&S\FHerbert Hoover Dike Rehabilitation\03-Culvert Rehabilitation\S-292(IP-1), S-290(IP-2), S-291(IP-3) Culvert Reconstruction\070 - Plans\IP-3\15 Electrical\E-04

SAFETY ON THIS JOB DEPENDS ON YOU

NOTES:

1. FOR ELECTRICAL NOTES, LEGEND, AND ABBREVIATIONS, SEE DRAWINGS E-01 AND E-02.
2. SEE DRAWING E-04 FOR NOTES AND CONTINUATION.
3. THE CONTRACTOR SHALL COORDINATE DESIGN WITH EQUIPMENT PROVIDED.
4. CORDINATE WITH FIELD OFFICE FOR PROPER LOCATIONS OF MOBOTIX CAMERAS. SEE DRAWING T-07.
5. COORDINATE WITH FIELD OFFICE FOR PROPER LOCATION OF SPECTRA CAMERA. SEE DRAWING T-07.
6. CONNECT CONTROL BUILDING DOOR MAGNETIC CONTACT TO AVAILABLE SUTRON XPERT ANALOG I/O MODULE PER MANUFACTURER'S WIRING DIAGRAM.
7. REFERENCED MANUFACTURERS SHALL BE CONSIDERED "OR APPROVED EQUAL."

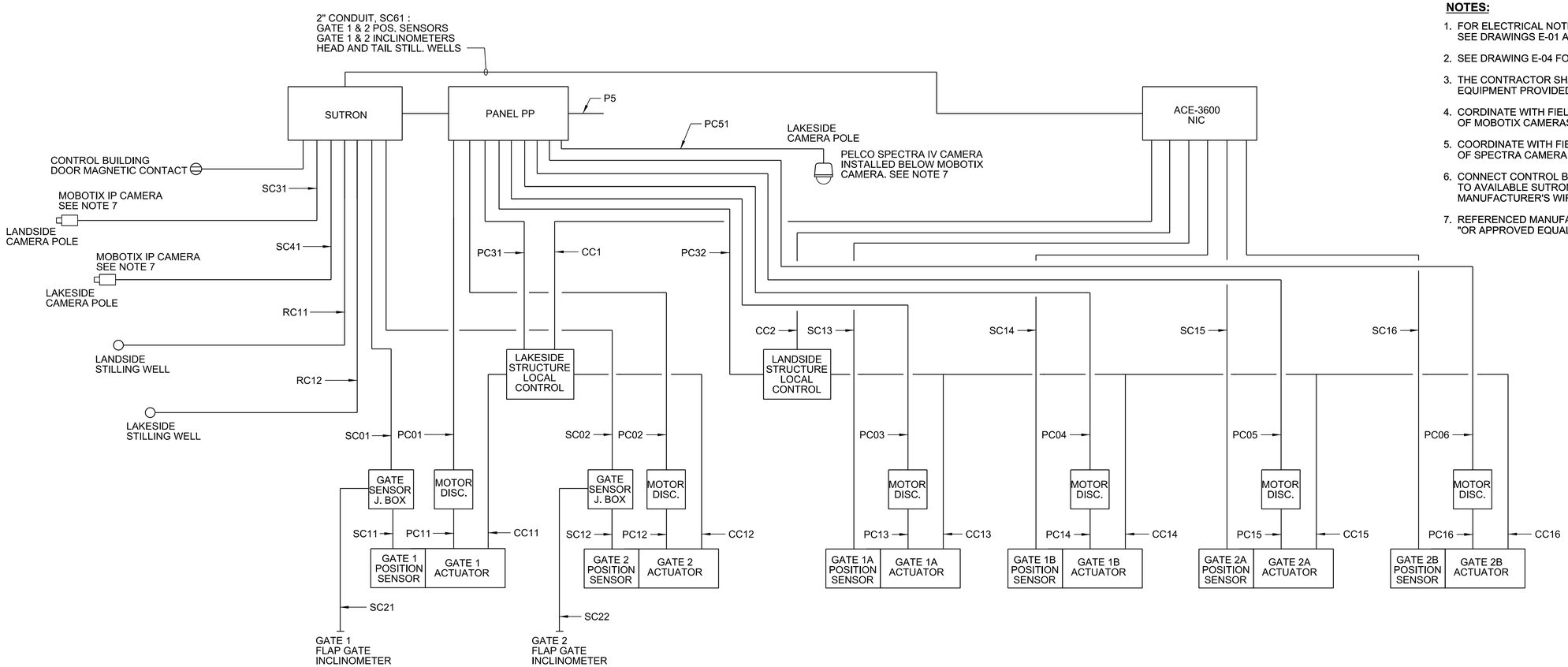

CONDUIT BLOCK DIAGRAM

SCALE: N.T.S.

KEY NOTES:

1. BOND TO STRUCTURAL FOUNDATION (REBARS), METAL SUPPORTS AND FRAMES, GATE EQUIPMENT, HANDRAILS, AND ALL OTHER EXPOSED METALS TO #2/0 AWG BC GROUND CABLE THAT CONNECTS TO CONTROL BUILDING GROUND LOOP. SEE GROUNDING DETAILS ON DWG E-10.
2. USE SEPARATE PULL BOXES FOR POWER WIRING CONDUITS AND INSTRUMENTATION WIRING CONDUITS.

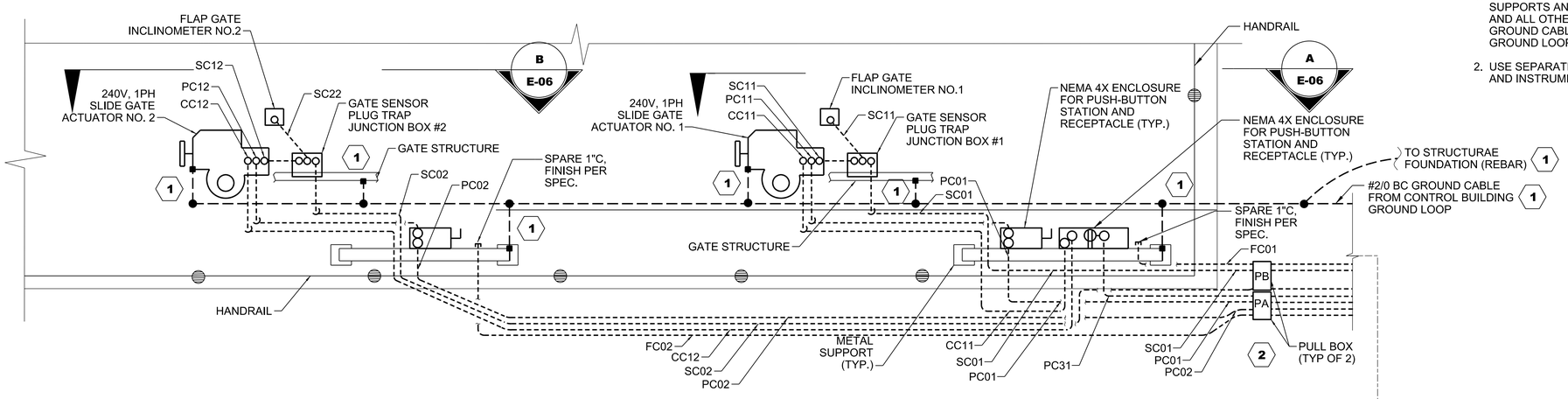

LAKESIDE CULVERT GATE ELECTRICAL PLAN

SCALE: N.T.S.

CONTINUED ON DWG E-04

US Army Corps of Engineers, Jacksonville District

No.	SYM.	ZONE	DESCRIPTION

DEPARTMENT OF THE ARMY
CORPS OF ENGINEERS
JACKSONVILLE DISTRICT
JACKSONVILLE, FLORIDA

DESIGNED BY: V.L.
DWN BY: J.D.H.
CKD BY: J.H.H.
SUBMITTED BY: N/A
DATE: OCTOBER 2015
SOLICITATION NO.: W912EP-16-R-0010
CONTRACT NO.: N/A
PLOT SCALE: AS SHOWN
PLOT DATE: APR 25, 2016
FILE NUMBER: N/A
FILE NAME: 114527-HHDRCRIP3-EP605.DGN

HERBERT HOOVER DIKE REHABILITATION PROJECT
STRUCTURE REPLACEMENTS

S-291 (IP-3) RECONSTRUCTION

ELECTRICAL
STRUCTURAL ELECTRICAL PLAN SHEET 2

DRAWING NO.
E-05

pw:\\COE-SAJPWP02JAX.saj.ds.usace.army.mil:SAJPW\Documents\C&SF\Herbert Hoover Dike Rehabilitation\03-Culvert Rehabilitation\S-292(IP-1), S-290(IP-2), S-291(IP-3) Culvert Reconstruction\070 - Plans\IP-3\15 Electrical\E-05

SAFETY ON THIS JOB DEPENDS ON YOU

GENERAL NOTE:

** THE CONTRACTOR SHALL COORDINATE DESIGN WITH EQUIPMENT PROVIDED

KEY NOTES:

1. UNFUSED DISCONNECT. PROVIDE A 3 POLE, 30 AMP, WITH AUXILLARY CONTACT HEAVY DUTY NEMA 4X, SS, 240V DISCONNECT.
2. STRUCTURE CONTROL AND OUTLET BOX 24"x 24"x 6", HOFFMAN 304SS WITH PADLOCK FITTING AND INNER PANEL WITH PUSHBUTTONS AND GFI RECEPTACLE WIRING SHALL BE MINIMUM SIZE #14AWG 600V TYPE SIS. PANEL FABRICATOR SHALL BE CERTIFIED UNDER UL508 AND PRODUCT SHALL HAVE UL CERTIFICATION.

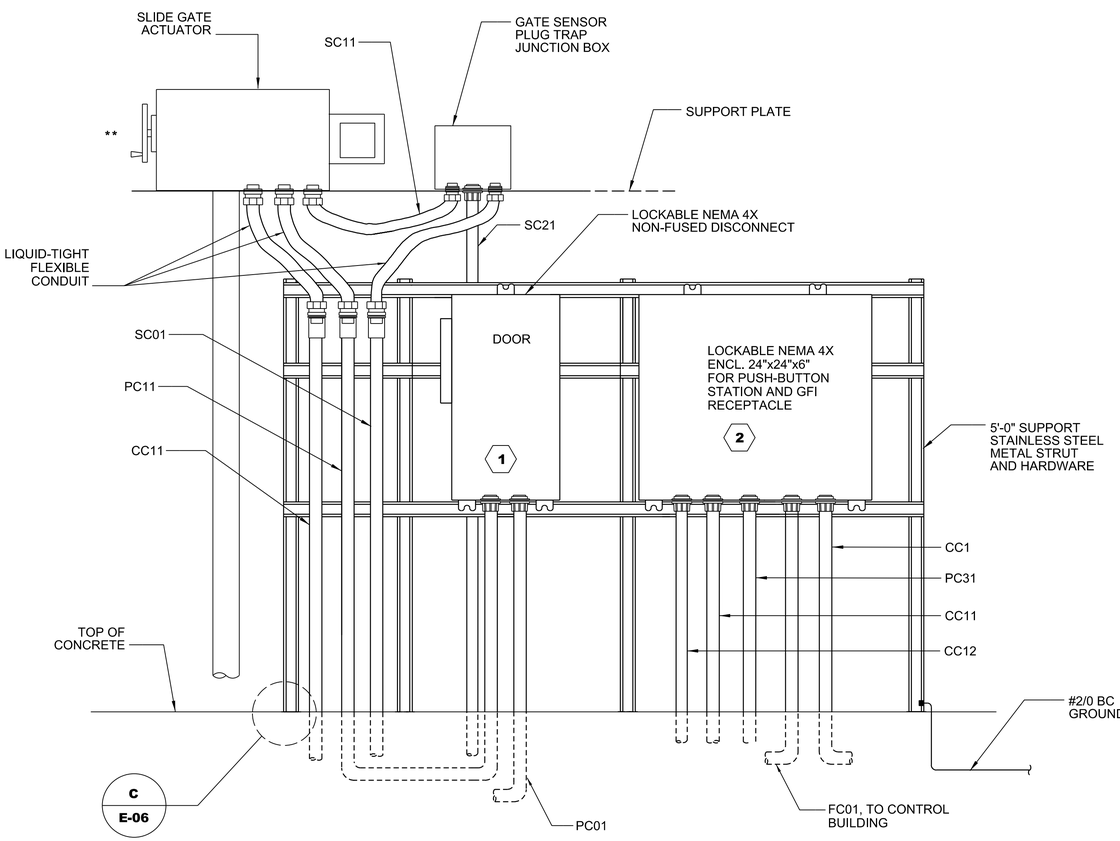

A E-05 **SECTION - LAKESIDE GATE 1**
SCALE: N.T.S.

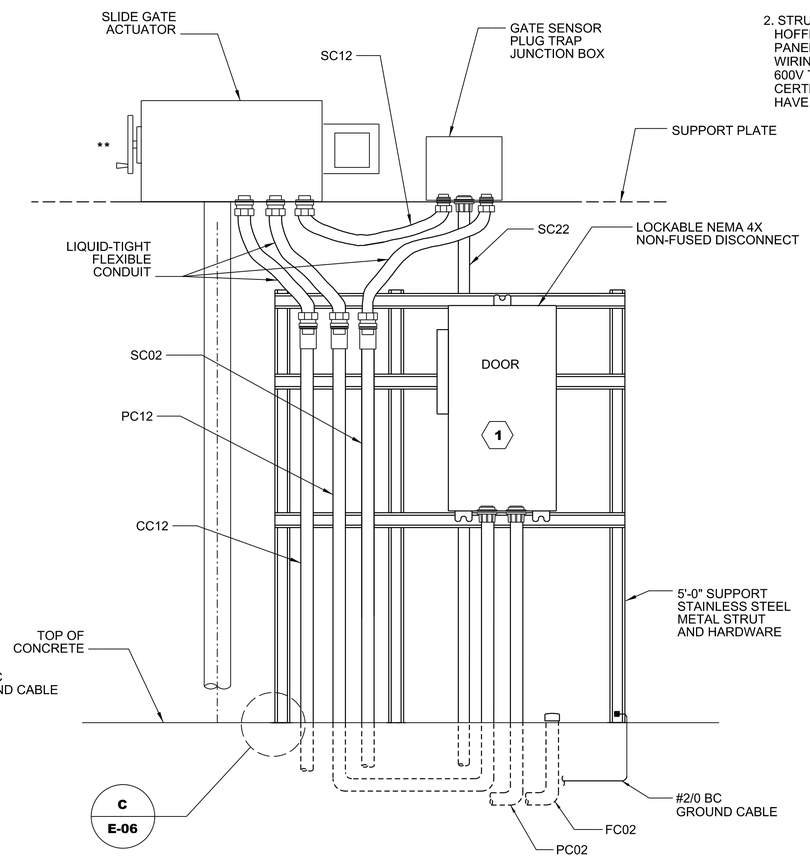

B E-05 **SECTION - LAKESIDE GATES 2**
SCALE: N.T.S.

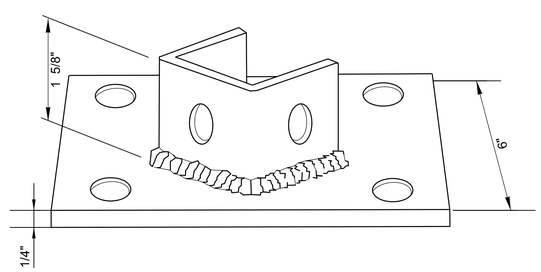

C E-06 **DETAIL-TYPICAL POST BASE**
SCALE: N.T.S.

US Army Corps of Engineers
Jacksonville District

No.	SYM	ZONE	DESCRIPTION

DEPARTMENT OF THE ARMY
CORPS OF ENGINEERS
JACKSONVILLE DISTRICT
JACKSONVILLE, FLORIDA

DESIGNED BY: V.L. | DATE: JAN 2015
DWN BY: J.D.H. | CKD BY: J.H.H. | SOLICITATION NO.: W912EP-16-R-0010
SUBMITTED BY: N/A | CONTRACT NO.: N/A
PLOT SCALE: N/A | PLOT DATE: Apr 25, 2016 | FILE NUMBER: N/A
FILE NAME: 114527-HHDRCRHP6-EI306.DGN

HERBERT HOOVER DIKE REHABILITATION PROJECT
STRUCTURE REPLACEMENTS

S-291 (IP-3) RECONSTRUCTION

ELECTRICAL

OPERATING PLATFORM DETAILS

DRAWING NO.
E-06

pw:\\COE-SAJPWP02JAX.saj.ds.usace.army.mil:SAJPW\Documents\C&SF\Herbert Hoover Dike Rehabilitation\03-Culvert Rehabilitation\S-292(IP-1), S-290(IP-2), S-291(IP-3) Culvert Reconstruction\070 - Plans\IP-3\15 Electrical\E-06

SAFETY ON THIS JOB DEPENDS ON YOU

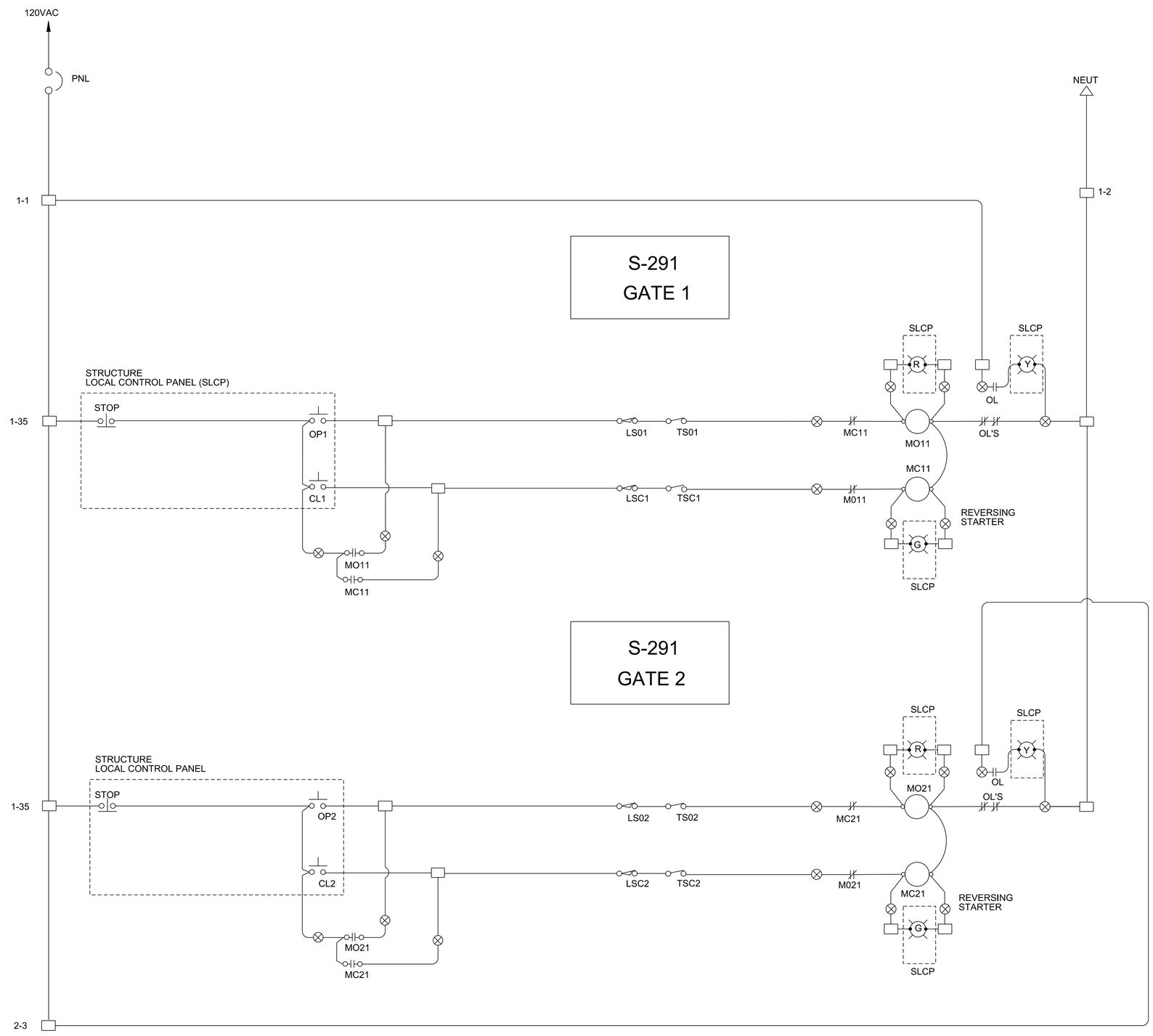

LAKESIDE CONTROL PANEL SCHEMATIC

SCALE: N.T.S.

NOTE:

1. FOR ELECTRICAL NOTES, LEGEND, AND ABBREVIATIONS, SEE DRAWING E-01 AND E-02.

LEGEND:

O.L. THERMAL OVERLOAD CONTACT WITH STARTER

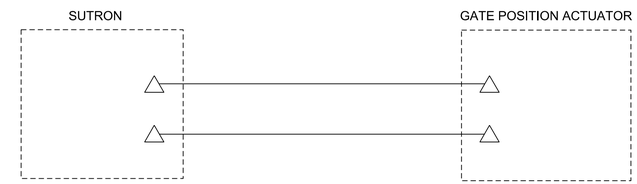

GATE POSITION INDICATION CIRCUIT

SCALE: N.T.S.

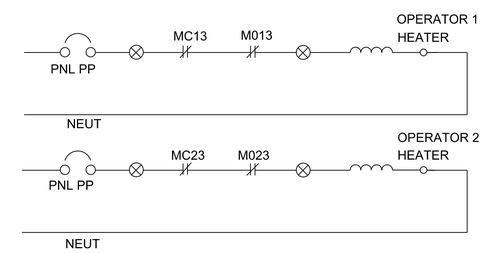

DRIVE OPERATOR HEATOR CIRCUITS

SCALE: N.T.S.

US Army Corps of Engineers
Jacksonville District

No.	SYM	ZONE	DESCRIPTION

DESIGNED BY: V.L.
DWN BY: J.D.H.
CKD BY: J.H.H.
SUBMITTED BY: N/A
PLOT SCALE: AS SHOWN
PLOT DATE: Apr 25, 2014
DATE: OCTOBER 2015
SOLICITATION NO.: W912EP-16-R-0010
CONTRACT NO.: N/A
FILE NUMBER: N/A
FILE NAME: 114527-HHDRCRIP3-E607.DGN

DEPARTMENT OF THE ARMY
CORPS OF ENGINEERS
JACKSONVILLE DISTRICT
JACKSONVILLE, FLORIDA

HERBERT HOOVER DIKE REHABILITATION PROJECT
STRUCTURE REPLACEMENTS

S-291 (IP-3) RECONSTRUCTION

ELECTRICAL

CONTROL SCHEMATIC

DRAWING NO.

E-07

pw:\\COE-SAJPWP02JAX.saj.ds.usace.army.mil:SAJPW\Documents\C&SF\Herbert Hoover Dike Rehabilitation\03-Culvert Rehabilitation\S-292(IP-1), S-290(IP-2), S-291(IP-3) Culvert Reconstruction\070 - Plans\IP-3\15 Electrical\E-07

PANEL SCHEDULE

PANEL: PP | MAINS: 150A MAIN BREAKER | SERVICE: 120/240 1PH 3W

TYP: NEMA 4X SS | AIC: 20,000 | MOUNTED: SURFACE

DESCRIPTION	VOLT-AMP LOAD PHASE A	VOLT-AMP LOAD PHASE B	CIRCUIT BREAKERS TRIP	POLE	CIR	CIR	TRIP	POLE	VOLT-AMP LOAD PHASE A	VOLT-AMP LOAD PHASE B	DESCRIPTION
LAKESIDE EQUIP. HEATERS	600		20	1	1	2	40	2	1920		GATE 1 MOTOR
GATE 2 MOTOR		1920	40	2	3	4				1920	"
"	1920				5	6	20	1	360		LAKESIDE SLCP & RECEPT
INTERIOR RECEPT.		360	20	1	7	8	20	1		120	SUTRON
A/C RECEPT.	360		20	1	9	10	20	1	660		LIGHTING
DUAL GATE 2A		1920	40	2	11	12	40	2		1920	DUAL GATE 1A
"	1920				13	14			1920		"
DUAL GATE 2B		1920	40	2	15	16	40	2		1920	DUAL GATE 1B
"	1920				17	18			1920		"
LANDSIDE EQUIP. HEATERS		600	20	1	19	20	20	1		60	SPECTRA CAMERA
TVSS	0		60	2	21	22	20	1	360		LANDSIDE SLCP & RECEPT
"		0			23	24	20	1		120	ACE 3600
SPARE	0		20	1	25	26	20	1	0		SPARE
SPACE		-			27	28				-	SPACE
	-				29	30			-		SPACE
SUBTOTAL	6720	6720							7140	5940	

CONNECTED LOAD PHASE A: 13860
CONNECTED LOAD PHASE B: 12660
TOTAL CONNECTED LOAD: 26520

CIRCUIT SCHEDULE

CIRCUIT NUMBER	DESCRIPTION	FROM	TO	CABLE SIZE	ROUTING & REMARKS
C11	GATE 1 CONTROLS	SLC	GATE 1 ACTUATOR	10 #12 AWG & #12 GND	SLC, CC11, ACTUATOR 1
C12	GATE 2 CONTROLS	SLC	GATE 2 ACTUATOR	10 #12 AWG & #12 GND	SLC, CC12, ACTUATOR 2
C13	GATE 1A CONTROLS	SLC	GATE 1A ACTUATOR	10 #12 AWG & #12 GND	SLC, CC13, ACTUATOR 1A
C14	GATE 1B CONTROLS	SLC	GATE 1B ACTUATOR	10 #12 AWG & #12 GND	SLC, CC14, ACTUATOR 1B
C15	GATE 2A CONTROLS	SLC	GATE 2A ACTUATOR	10 #12 AWG & #12 GND	SLC, CC15, ACTUATOR 2A
C16	GATE 2B CONTROLS	SLC	GATE 2B ACTUATOR	10 #12 AWG & #12 GND	SLC, CC16, ACTUATOR 2B
PP-1	LAKESIDE EQUIP. HEATER	PANEL PP	GATE HEATERS	2 #12 AWG & #12 GND	PP, PC01, MTR DS, PC11, ACTUATOR 1 & 2
PP-2/4	GATE 1 MOTOR	PANEL PP	GATE 1 MOTOR	6 #8 AWG & #8 GND	PP, PC01, MTR DS, PC11, ACTUATOR 1
PP-3/5	GATE 2 MOTOR	PANEL PP	GATE 2 MOTOR	6 #8 AWG & #8 GND	PP, PC02, MTR DS, PC12, ACTUATOR 2
PP-6	LAKESIDE SLCP & RECEP	PANEL PP	LAKESIDE SLCP	2 #10 AWG & #10 GND	PC31
PP-7	INTERIOR RECEPTACLES	PANEL PP	RECEPTACLES	2 #12 AWG & #12 GND	¾" CONDUIT
PP-8	SUTRON	PANEL PP	SUTRON	2 #12 AWG & #12 GND	¾" CONDUIT
PP-9	A/C RECEPTACLE	PANEL PP	A/C UNIT	2 #12 AWG & #12 GND	¾" CONDUIT
PP-10	LIGHTING	PANEL PP	LIGHTS	2 #12 AWG & #12 GND	PC51
PP-11/13	GATE 2A MOTOR	PANEL PP	GATE 2A MOTOR	6 #8 AWG & #8 GND	PP, PC05, MTR DS, PC15, ACTUATOR 2A
PP-12/14	GATE 1A MOTOR	PANEL PP	GATE 1A MOTOR	6 #8 AWG & #8 GND	PP, PC03, MTR DS, PC13, ACTUATOR 1A
PP-15/17	GATE 2B MOTOR	PANEL PP	GATE 2B MOTOR	6 #8 AWG & #8 GND	PP, PC06, MTR DS, PC16, ACTUATOR 2B
PP-16/18	GATE 1B MOTOR	PANEL PP	GATE 1B MOTOR	6 #8 AWG & #8 GND	PP, PC04, MTR DS, PC14, ACTUATOR 1B
PP-19	LANDSIDE EQUIP. HEATER	PANEL PP	GATE HEATERS	2 #12 AWG & #12 GND	PP, PC01, MTR DS, PC12, ACTR 1A,1B, 2A & 2B
PP-20	SPECTRA CAMERA	PANEL PP	SPECTRA CAMERA	2 #12 AWG & #12 GND	1" CONDUIT, PC41
PP-22	LANDSIDE SLCP & RECEP	PANEL PP	LANDSIDE SLCP	2 #10 AWG & #10 GND	PC32
PP-24	ACE 3600	PANEL PP	ACE 3600	2 #12 AWG & #12 GND	¾" CONDUIT
P1	FPL SERVICE	SERVICE POINT	METER	3 #1 AWG	2" CONDUIT
P2	BUILDING SERVICE	METER	BUILDING DISC. SWITCH	3 #1 AWG & #6 GND	2" CONDUIT
P3	BUILDING SERVICE	DISC. SWITCH	TRANSFER SWITCH	3 #1 AWG & #6 GND	2" CONDUIT
P4	PORTABLE GENSET SERVICE	PLUG BOX	TRANSFER SWITCH	3 #1 AWG & #6 GND	2" CONDUIT
P5	PANEL PP FEED	TRANSFER SWITCH	PANEL PP	3 #1 AWG & #6 GND	2" CONDUIT
S01	STILLING WELL LEVEL SENSOR	SUTRON	LAKESIDE STILLING WELL	BELDEN #9883	SUTRON, RC11, STILLING WELL
S02	STILLING WELL LEVEL SENSOR	SUTRON	LAKESIDE STILLING WELL	BELDEN #9883	SUTRON, RC12, STILLING WELL
S11	GATE 1 POSITION SENSOR	SUTRON	GATE 1 ACTUATOR	BELDEN #9883	SUTRON, SC01, SNSR JB, SC11, GATE 1 POS. SEN.
S12	GATE 2 POSITION SENSOR	SUTRON	GATE 2 ACTUATOR	BELDEN #9883	SUTRON, SC02, SNSR JB, SC12, GATE 2 POS. SEN.
S13	GATE 1A POSITION SENSOR	ACE 3600	GATE 1A ACTUATOR	BELDEN #9883	ACE-3600, SC03, SC13, GATE 1A POS. SEN.
S14	GATE 1B POSITION SENSOR	ACE 3600	GATE 1B ACTUATOR	BELDEN #9883	ACE-3600, SC04, SC14, GATE 1B POS. SEN.
S15	GATE 2A POSITION SENSOR	ACE 3600	GATE 2A ACTUATOR	BELDEN #9883	ACE-3600, SC05, SC15, GATE 2A POS. SEN.
S16	GATE 2B POSITION SENSOR	ACE 3600	GATE 2B ACTUATOR	BELDEN #9883	ACE-3600, SC06, SC16, GATE 2B POS. SEN.
S21	GATE 1 INCLINOMETER	SUTRON	GATE 1 INCLINOMETER	BELDEN #9883	SUTRON, SC01, SNSR JB, SC21, GATE 1 INCLINOMETER
S22	GATE 2 INCLINOMETER	SUTRON	GATE 2 INCLINOMETER	BELDEN #9883	SUTRON, SC02, SNSR JB, SC22, GATE 2 INCLINOMETER

NOTES:

1. FOR ELECTRICAL NOTES, LEGEND, AND ABBREVIATIONS, SEE DWG E-01.
2. CONTRACTOR SHALL FURNISH AND INSTALL ON THE COVER OF THE PANEL, WHITE ON BLACK PHENOLIC NAMEPLATE WITH 1/2 INCH HIGH LETTERS IDENTIFYING THE LOCATION OF THE MAIN BREAKER. NAMEPLATE SHALL BE ATTACHED WITH SCREWS.
3. PROVIDE DUPLICATE ANALOG INPUTS (AI) FROM GATE 1 AND 2 POSITION SENSORS, GATE 1 AND 2 INCLINOMETERS, AND HEADWATER AND TAILWATER STILLING WELLS IN 2" CONDUIT FOR MOTOROLA ACE-3600.

CONDUIT SCHEDULE

CONDUIT NUMBER	FUNCTION	FROM	TO	CONDUIT SIZE	CONDUCTORS	CABLES	NOTES
CC11	CONTROL	GATE 1 DISC SW/PUSH B	GATE 1 ACTUATOR	1 ½"	11 #12 AWG	C11	
CC12	CONTROL	GATE 2 DISC SW/PUSH B	GATE 2 ACTUATOR	1 ½"	11 #12 AWG	C12	
CC13	CONTROL	GATE 1A DISC SW/PUSH B	GATE 1A ACTUATOR	1 ½"	11 #12 AWG	C13	
CC14	CONTROL	GATE 1B DISC SW/PUSH B	GATE 1B ACTUATOR	1 ½"	11 #12 AWG	C14	
CC15	CONTROL	GATE 2A DISC SW/PUSH B	GATE 2A ACTUATOR	1 ½"	11 #12 AWG	C15	
CC16	CONTROL	GATE 2B DISC SW/PUSH B	GATE 2B ACTUATOR	1 ½"	11 #12 AWG	C16	
CC1	CONTROL	ACE-3600	LAKESIDE SLCP	2"	PULL WIRE	FUTURE	
CC2	CONTROL	ACE-3600	LANDSIDE SLCP	2"	PULL WIRE	FUTURE	
FC01	FUTURE	PANEL PP	LAKESIDE SLCP	2"	PULL WIRE	SPARE	
FC02	FUTURE	PULL BOX	LAKESIDE GATE 2 DISC SW	2"	PULL WIRE	SPARE	
FC03	FUTURE	SUTRON	LANDSIDE STILLING WELL	2"	PULL WIRE	SPARE	
FC04	FUTURE	SUTRON	LAKESIDE STILLING WELL	2	PULL WIRE	SPARE	
FC05	FUTURE	SUTRON	LANDSIDE CAMERA POLE	2"	PULL WIRE	SPARE	
FC06	FUTURE	SUTRON	LAKESIDE CAMERA POLE	2"	PULL WIRE	SPARE	
FC07	FUTURE	SUTRON	ANTENNA POLE	2"	CAT5E, PULL WIRE	SPARE	
FC08	FUTURE	PANEL PP	LANDSIDE SLCP	2"	PULL WIRE	SPARE	
FC09	FUTURE	ACE 3600	LANDSIDE SLCP	2"	PULL WIRE	SPARE	
PC01	POWER	PANEL PP	GATE 1 DISC SW	1 ½"	3 #12 AWG, 7 #8 AWG	PP-2/4, PP-1	
PC02	POWER	PANEL PP	GATE 2 DISC SW	1 ½"	3 #12 AWG, 7 #8 AWG	PP-3/5, PP-1	
PC03	POWER	PANEL PP	GATE 1A DISC SW	1 ½"	3 #12 AWG, 7 #8 AWG	PP-12/14, PP-19	
PC04	POWER	PANEL PP	GATE 1B DISC SW	1 ½"	3 #12 AWG, 7 #8 AWG	PP-16/18, PP-19	
PC05	POWER	PANEL PP	GATE 2A DISC SW	1 ½"	3 #12 AWG, 7 #8 AWG	PP-11/13, PP-19	
PC06	POWER	PANEL PP	GATE 2B DISC SW	1 ½"	3 #12 AWG, 7 #8 AWG	PP-15/17, PP-19	
PC11	POWER	GATE 1 DISC SW	GATE 1 ACTUATOR	1 ½"	3 #12 AWG, 7 #8 AWG	PP-2/4, PP-1	
PC12	POWER	GATE 2 DISC SW	GATE 2 ACTUATOR	1 ½"	3 #12 AWG, 7 #8 AWG	PP-3/5, PP-1	
PC13	POWER	GATE 1A DISC SW	GATE 1A ACTUATOR	1 ½"	3 #12 AWG, 7 #8 AWG	PP-12/14, PP-19	
PC14	POWER	GATE 1B DISC SW	GATE 1B ACTUATOR	1 ½"	3 #12 AWG, 7 #8 AWG	PP-16/18, PP-19	
PC15	POWER	GATE 2A DISC SW	GATE 2A ACTUATOR	1 ½"	3 #12 AWG, 7 #8 AWG	PP-11/13, PP-19	
PC16	POWER	GATE 2B DISC SW	GATE 2B ACTUATOR	1 ½"	3 #12 AWG, 7 #8 AWG	PP-15/17, PP-19	
PC31	POWER	PANEL PP	LAKESIDE SLCP	1"	2 #10 AWG & #10 GND	PP-6	
PC32	POWER	PANEL PP	LANDSIDE SLCP	1"	2 #10 AWG & #10 GND	PP-22	
PC41	POWER	PANEL PP	SPECTRA CAMERA	1"	2 #12 AWG & #12 GND	PP-20	
PC51	POWER	PANEL PP	LIGHTS	1"	2 #12 AWG & #12 GND	PP-10	
RC01	ANTENNA	SUTRON	ANTENNA POLE	4 - 2"	2 LMR ANTENNA CABLE LMR-400UF, GPS ANTENNA CABLE, CAT5E		
RC11	SIGNAL	SUTRON	LANDSIDE STILLING WELL	1"	BELDEN #9883	S01	
RC12	SIGNAL	SUTRON	LAKESIDE STILLING WELL	1"	BELDEN #9883	S02	
SC01	SIGNAL	SUTRON	GATE 1 SENSOR J. BOX	1 ½"	2 - BELDEN #9883	S11,S21	
SC02	SIGNAL	SUTRON	GATE 2 SENSOR J. BOX	1 ½"	2 - BELDEN #9883	S12,S22	
SC11	SIGNAL	GATE 1 SENSOR J. BOX	GATE 1 POSITION SENSOR	1"	BELDEN #9883	S11	
SC12	SIGNAL	GATE 2 SENSOR J. BOX	GATE 2 POSITION SENSOR	1"	BELDEN #9883	S12	
SC13	SIGNAL	ACE 3600	GATE 1A POSITION SENSOR	1"	BELDEN #9883	S13	
SC14	SIGNAL	ACE 3600	GATE 1A POSITION SENSOR	1"	BELDEN #9883	S14	
SC15	SIGNAL	ACE 3600	GATE 2A POSITION SENSOR	1"	BELDEN #9883	S15	
SC16	SIGNAL	ACE 3600	GATE 2B POSITION SENSOR	1"	BELDEN #9883	S16	
SC21	SIGNAL	GATE 1 SENSOR J. BOX	GATE 1 INCLINOMETER	1"	BELDEN #9883	S21	
SC22	SIGNAL	GATE 2 SENSOR J. BOX	GATE 2 INCLINOMETER	1"	BELDEN #9883	S22	
SC31	SIGNAL	SUTRON	LANDSIDE CAMERA POLE	1 ½"	2 - CAT5E		MOBOTIX CAMERA
SC41	SIGNAL	SUTRON	LAKESIDE CAMERA POLE	1 ½"	2 - CAT5E		MOBOTIX CAMERA
SC51	SIGNAL	SUTRON	LAKESIDE CAMERA POLE	1 ½"	2 - CAT5E		SPECTRA CAMERA
SC61	SIGNAL	SUTRON	ACE-3600	2"			SEE NOTE 3

US Army Corps of Engineers
Jacksonville District

No.	SYM	ZONE	DESCRIPTION

DESIGNED BY: V.L. | DATE: OCTOBER 2015
DWN BY: J.D.H. | CKD BY: J.H.H. | SOLICITATION NO.: W912EP-16-R-0010
SUBMITTED BY: N/A | CONTRACT NO.: N/A
PLOT SCALE: N/A | PLOT DATE: Apr 25, 2016 | FILE NUMBER: N/A
FILE NAME: 114527-HHDRCRIP3-E1608.DGN

DEPARTMENT OF THE ARMY
CORPS OF ENGINEERS
JACKSONVILLE DISTRICT
JACKSONVILLE, FLORIDA

HERBERT HOOVER DIKE REHABILITATION PROJECT
STRUCTURE REPLACEMENTS
S-291 (IP-3) RECONSTRUCTION
ELECTRICAL
CONDUIT AND CIRCUIT SCHEDULES

DRAWING NO.
E-08

pw:\\COE-SAJ\PWP02\JAX.saj.ds.usace.army.mil:SAJPW\Documents\C&S\FHerbert Hoover Dike Rehabilitation\03-Culvert Rehabilitation\S-292(IP-1), S-290(IP-2), S-291(IP-3) Culvert Reconstruction\070 - Plans\IP-3\15 Electrical\E-08

SAFETY ON THIS JOB DEPENDS ON YOU

NOTES:

1. ALL ELECTRICAL WORK SHALL COMPLY WITH THE LATEST NEC REQUIREMENTS.

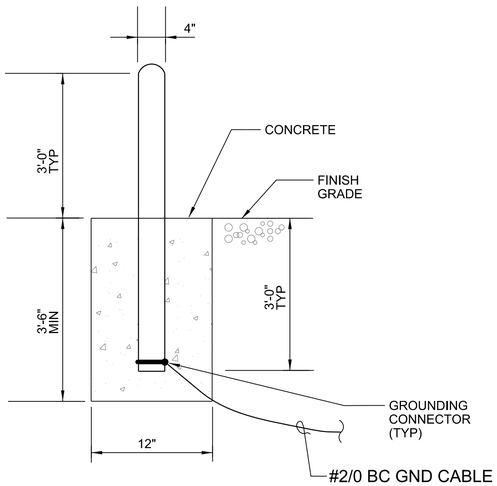

BOLLARD GROUNDING DETAIL
SCALE: N.T.S.

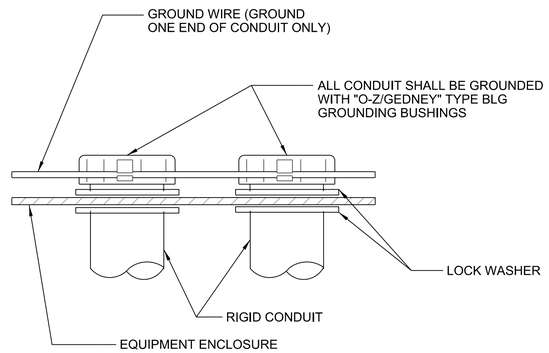

CONDUIT GROUNDING
(TYPICAL)
SCALE: N.T.S.

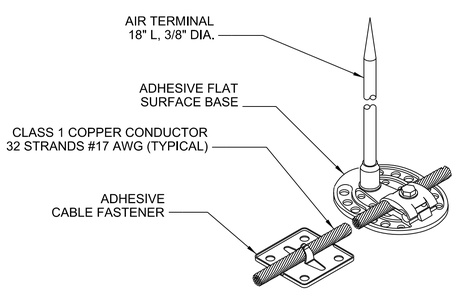

ADHESIVE SURFACE AIR TERMINAL MOUNTING
SCALE: N.T.S.

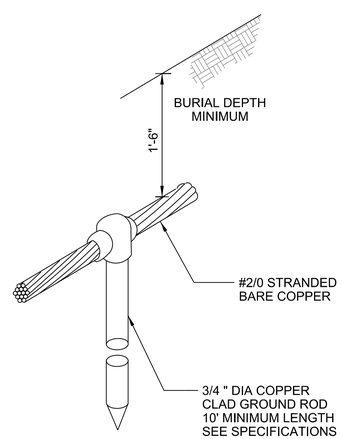

GROUND ROD DETAIL
SCALE: N.T.S.

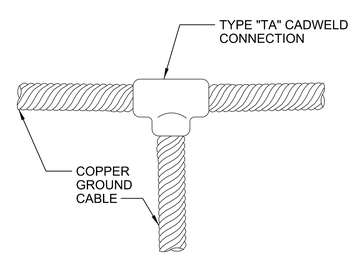

GROUND CABLE CONNECTION
SCALE: N.T.S.

US Army Corps of Engineers
Jacksonville District

No.	SYM	ZONE	DESCRIPTION

DEPARTMENT OF THE ARMY
CORPS OF ENGINEERS
JACKSONVILLE DISTRICT
JACKSONVILLE, FLORIDA

DESIGNED BY: V.L.
DWN BY: J.D.H.
CKD BY: J.D.H.
SUBMITTED BY: N/A
DATE: OCTOBER 2015
SOLICITATION NO.: W912EP-16-R-0010
CONTRACT NO.: N/A
PLOT SCALE: AS SHOWN
PLOT DATE: Apr 25, 2016
FILE NUMBER: N/A
FILE NAME: 114527-HHDRCRIP3-EG609.DGN

HERBERT HOOVER DIKE REHABILITATION PROJECT
STRUCTURE REPLACEMENTS

S-291 (IP-3) RECONSTRUCTION

ELECTRICAL
ELECTRICAL DETAILS
SHEET 1

DRAWING NO.
E-09

pw:\\COE-SAJPWP02JAX.saj.ds.usace.army.mil:SAJPW\Documents\C&SF\Herbert Hoover Dike Rehabilitation\03-Culvert Rehabilitation\S-292(IP-1), S-290(IP-2), S-291(IP-3) Culvert Reconstruction\070 - Plans\IP-3\15 Electrical\E-09

SAFETY ON THIS JOB DEPENDS ON YOU

NOTES:

1. ALL ELECTRICAL WORK SHALL COMPLY WITH THE LATEST NEC REQUIREMENTS.
2. CONTRACTOR SHALL PROVIDE COMPLETE GROUNDING TO ALL EQUIPMENT SYSTEMS AS REQUIRED.

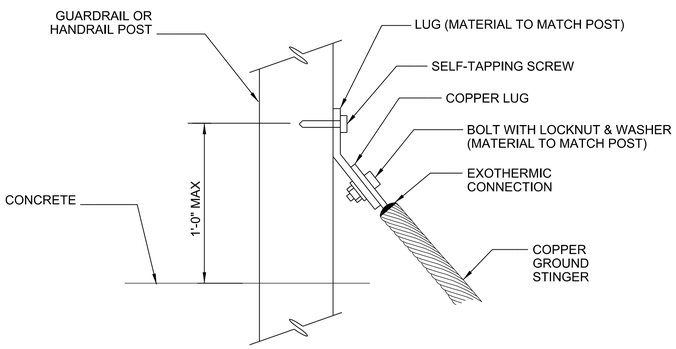

GUARDRAIL/HANDRAIL GROUNDING DETAIL
SCALE: N.T.S.

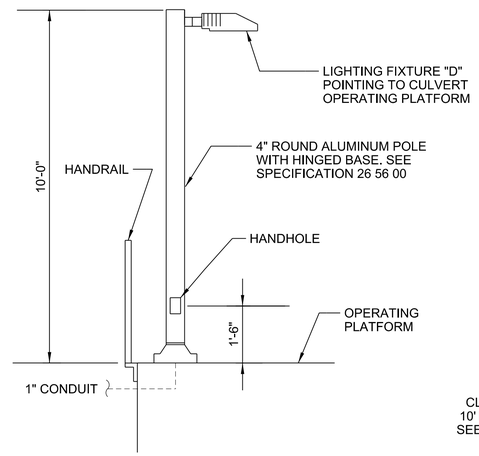

LIGHT POLE AND FIXTURE DETAIL
SCALE: N.T.S.

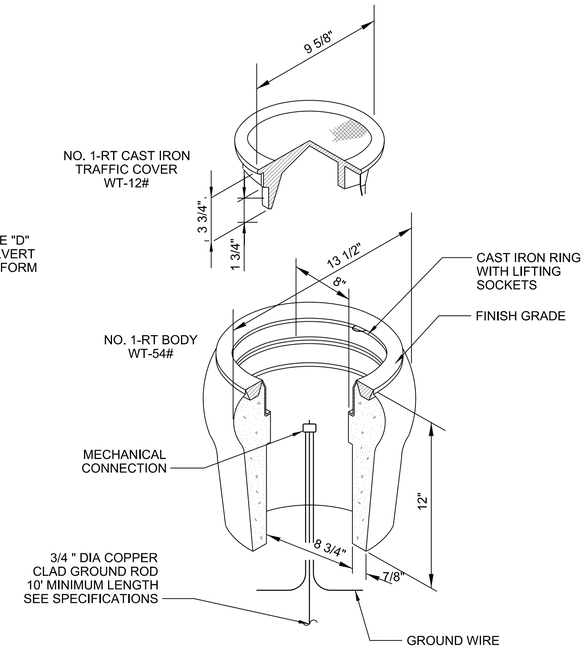

GROUND ROD WELL
SCALE: N.T.S.

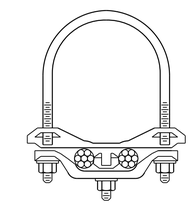

POST CLAMP DETAIL
SCALE: N.T.S.

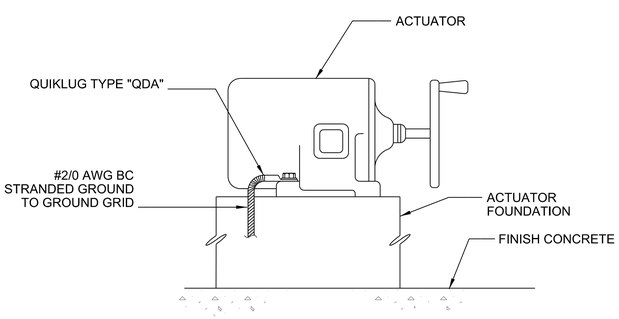

EQUIPMENT GROUNDING DETAIL
SCALE: N.T.S.

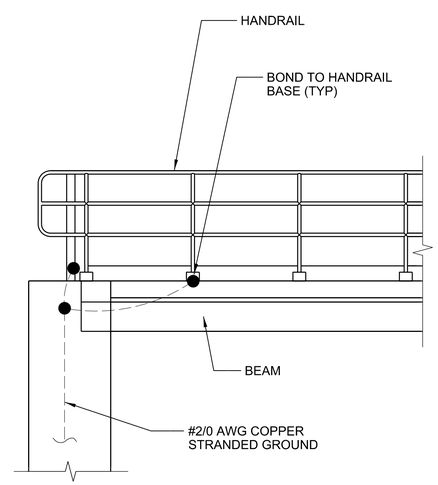

HANDRAIL GROUNDING DETAIL
SCALE: N.T.S.

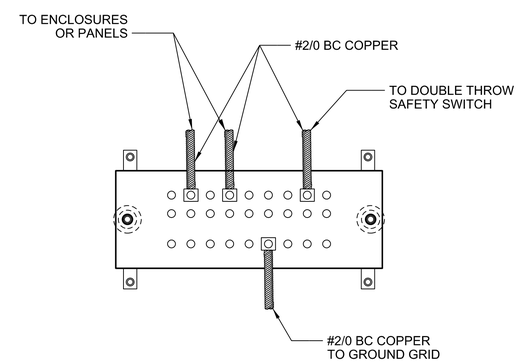

GROUND BUSBAR DETAIL
SCALE: N.T.S.

US Army Corps of Engineers
Jacksonville District

No.	SYM	ZONE	DESCRIPTION

DEPARTMENT OF THE ARMY
CORPS OF ENGINEERS
JACKSONVILLE DISTRICT
JACKSONVILLE, FLORIDA

DESIGNED BY: V.L. | DATE: OCTOBER 2015
DWN BY: J.D.H. | CKD BY: J.H.H. | SOLICITATION NO.: W912EP-16-R-0010
SUBMITTED BY: N/A | CONTRACT NO.: N/A
PLOT SCALE: AS SHOWN | PLOT DATE: Apr 25, 2016 | FILE NUMBER: N/A
FILE NAME: 114527-HHDRCRIP3-EG510.DGN

HERBERT HOOVER DIKE REHABILITATION PROJECT
STRUCTURE REPLACEMENTS

S-291 (IP-3) RECONSTRUCTION

ELECTRICAL

ELECTRICAL DETAILS SHEET 2

DRAWING NO.
E-10

pw:\\COE-SAJPW\P02JAX.saj.ds.usace.army.mil:SAJPW\Documents\C&SF\Herbert Hoover Dike Rehabilitation\03-Culvert Rehabilitation\S-292(IP-1), S-290(IP-2), S-291(IP-3) Culvert Reconstruction\070 - Plans\IP-3\15 Electrical\E-10

SAFETY ON THIS JOB DEPENDS ON YOU

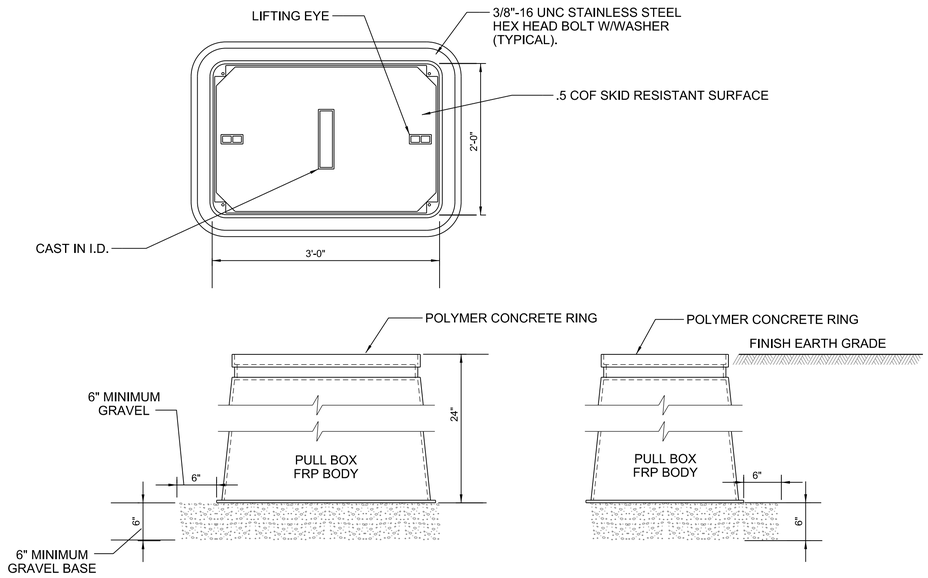

TYPICAL PULL BOX

SCALE: N.T.S.

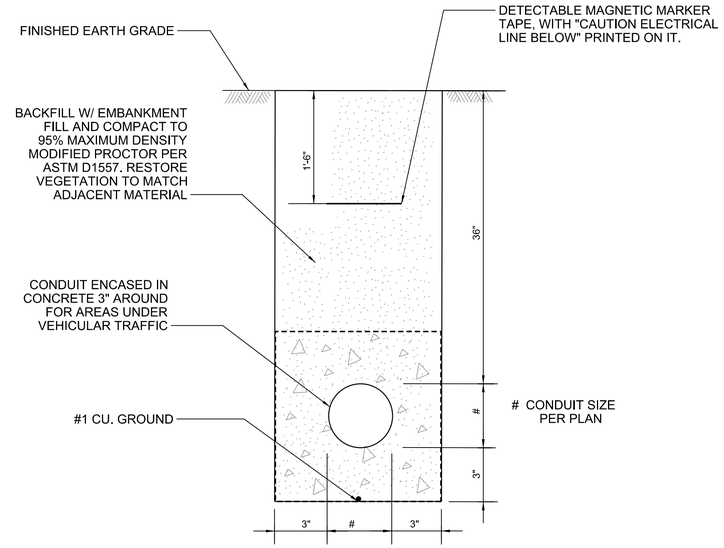

UGE SECONDARY CONDUIT TRENCH DETAIL

SCALE: N.T.S.

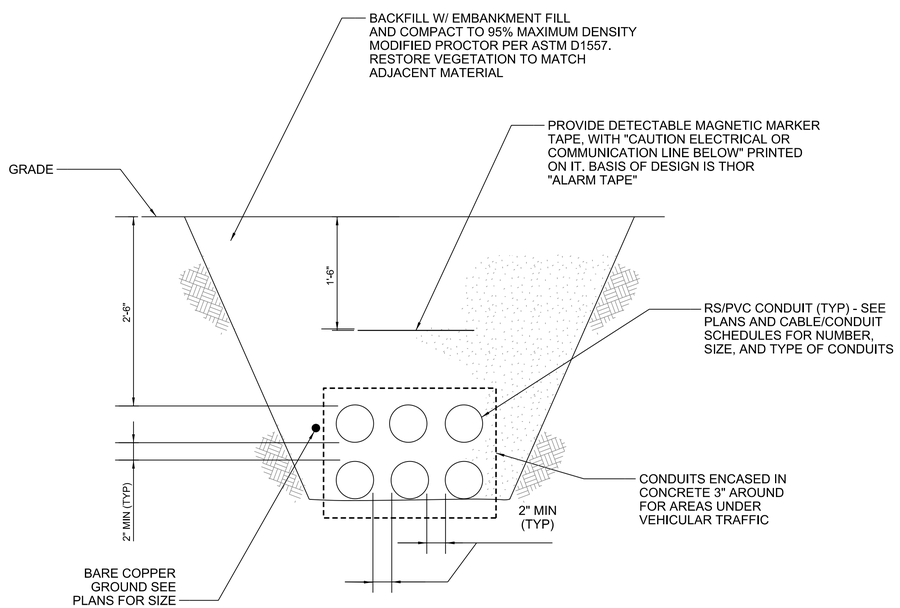

CONDUIT BURIAL DETAIL

SCALE: N.T.S.

NOTES:

1. ALL ELECTRICAL WORK SHALL COMPLY WITH THE LATEST NEC REQUIREMENTS.
2. LOADINGS FOR PULL BOX SHALL COMPLY WITH ANSI/SCTE 77 AND SHALL COMPLY WITH ANSI TIER 15 TEST PROVISIONS USE STRONGWELL QUAZITE CATALOGUE #PG2436BA24 FOR PULL BOX AND PG2436HGOO FOR PULL BOX COVER OR APPROVED EQUAL.

US Army Corps of Engineers
Jacksonville District

No.	SYM	ZONE	DESCRIPTION

DEPARTMENT OF THE ARMY
CORPS OF ENGINEERS
JACKSONVILLE DISTRICT
JACKSONVILLE, FLORIDA

DESIGNED BY: V.L.
DWN BY: J.D.H.
CKD BY: J.H.H.
SUBMITTED BY: N/A
PLOT SCALE: AS SHOWN
PLOT DATE: Apr 25, 2014
DATE: OCTOBER 2015
SOLICITATION NO.: W912EP-16-R-0010
CONTRACT NO.: N/A
FILE NUMBER: N/A
FILE NAME: 114527-HHDRCRIP3-ESS11.DGN

HERBERT HOOVER DIKE REHABILITATION PROJECT
STRUCTURE REPLACEMENTS

S-291 (IP-3) RECONSTRUCTION

ELECTRICAL

ELECTRICAL DETAILS
SHEET 3

DRAWING NO.

E-11

pw:\\COE-SAJPWP02JAX.saj.ds.usace.army.mil:SAJPW\Documents\C&SF\Herbert Hoover Dike Rehabilitation\03-Culvert Rehabilitation\S-292(IP-1), S-290(IP-2), S-291(IP-3) Culvert Reconstruction\070 - Plans\IP-3\15 Electrical\E-11

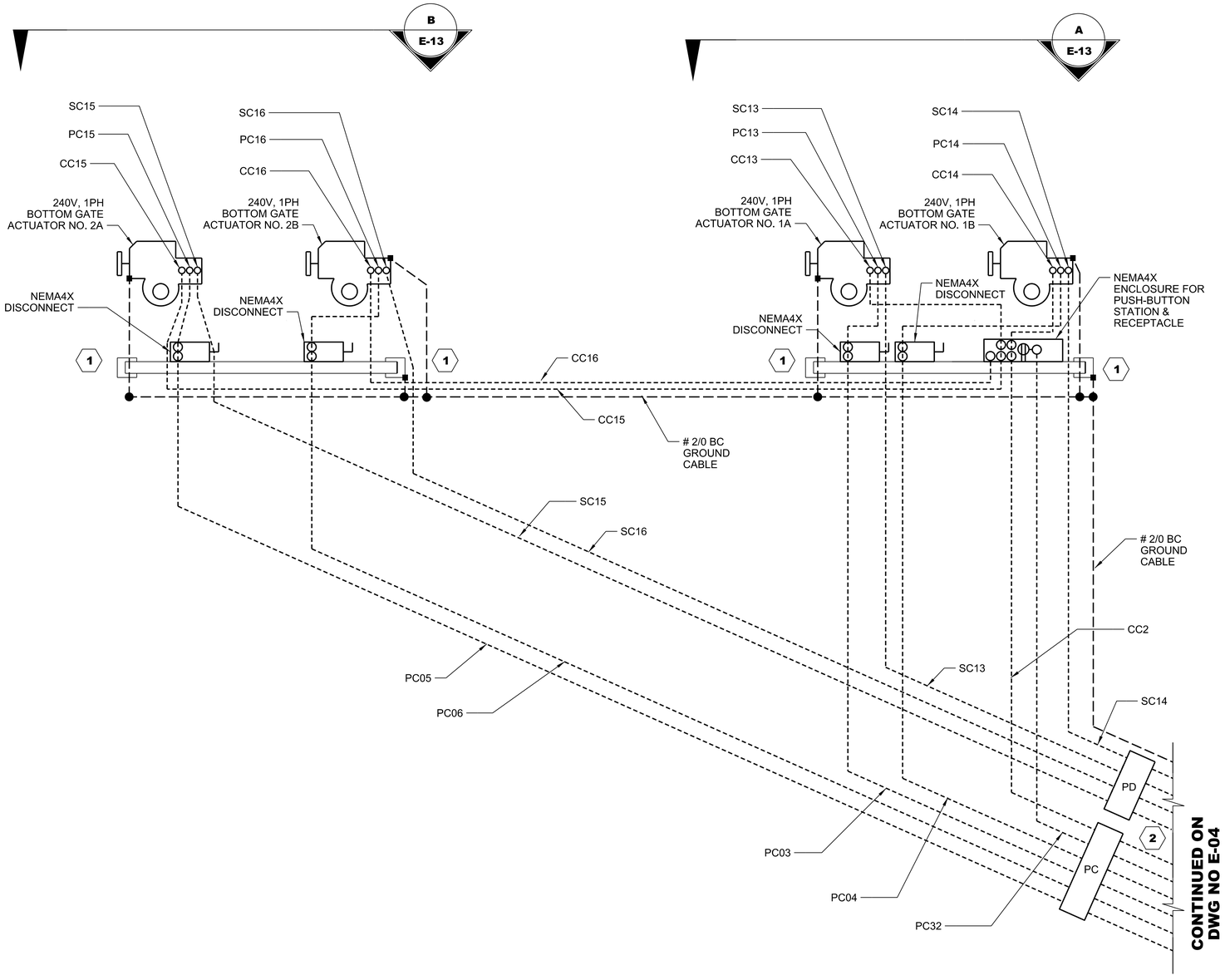

LANDSIDE CULVERT GATE ELECTRICAL PLAN

SCALE: N.T.S.

NOTES:

1. FOR ELECTRICAL NOTES, LEGEND, AND ABBREVIATIONS, SEE DRAWINGS E-01 AND E-02.
2. SEE DRAWING E-04 FOR NOTES AND CONTINUATION.
3. THE CONTRACTOR SHALL COORDINATE DESIGN WITH EQUIPMENT PROVIDED.
4. CORDINATE WITH FIELD OFFICE FOR PROPER LOCATIONS OF MOBOTIX CAMERAS. SEE DRAWING T-07.
5. COORDINATE WITH FIELD OFFICE FOR PROPER LOCATION OF SPECTRA CAMERA. SEE DRAWING T-07.
6. CONNECT CONTROL BUILDING DOOR MAGNETIC CONTACT TO AVAILABLE SUTRON XPERT ANALOG I/O MODULE PER MANUFACTURER'S WIRING DIAGRAM.
7. REFERENCED MANUFACTURERS SHALL BE CONSIDERED "OR APPROVED EQUAL."

KEY NOTES:

1. BOND TO STRUCTURAL FOUNDATION (REBARS), METAL SUPPORTS AND FRAMES, GATE EQUIPMENT, HANDRAILS, AND ALL OTHER EXPOSED METALS TO #2/0 AWG BC GROUND CABLE THAT CONNECTS TO CONTROL BUILDING GROUND LOOP. SEE GROUNDING DETAILS ON DRAWING E-10.
2. PROVIDE SEPARATE PULL BOXES FOR POWER WIRING AND INSTRUMENTATION WIRING.

US Army Corps of Engineers
Jacksonville District

No.	SYM	ZONE	DESCRIPTION

DEPARTMENT OF THE ARMY
CORPS OF ENGINEERS
JACKSONVILLE DISTRICT
JACKSONVILLE, FLORIDA

DESIGNED BY: V.L.	DATE: APRIL 2016	
DWN BY: J.D.H.	CKD BY: J.H.H.	SOLICITATION NO.: W912EP-16-R-0010
SUBMITTED BY: N/A	CONTRACT NO.: N/A	
PLOT SCALE: AS SHOWN	PLOT DATE: APR 25, 2016	FILE NUMBER: N/A
FILE NAME: 114527-HHDRCRIP3-EP612.DGN		

HERBERT HOOVER DIKE REHABILITATION PROJECT
STRUCTURE REPLACEMENTS

S-291 (IP-3) RECONSTRUCTION

ELECTRICAL

LANDSIDE CULVERT GATE ELECTRICAL PLAN

DRAWING NO.

E-12

pw:\\COE-SAJPWP02JAX.saj.ds.usace.army.mil:SAJPW\Documents\C&SF\Herbert Hoover Dike Rehabilitation\03-Culvert Rehabilitation\S-292(IP-1), S-290(IP-2), S-291(IP-3) Culvert Reconstruction\070 - Plans\IP-3\15 Electrical\E-12

SAFETY ON THIS JOB DEPENDS ON YOU

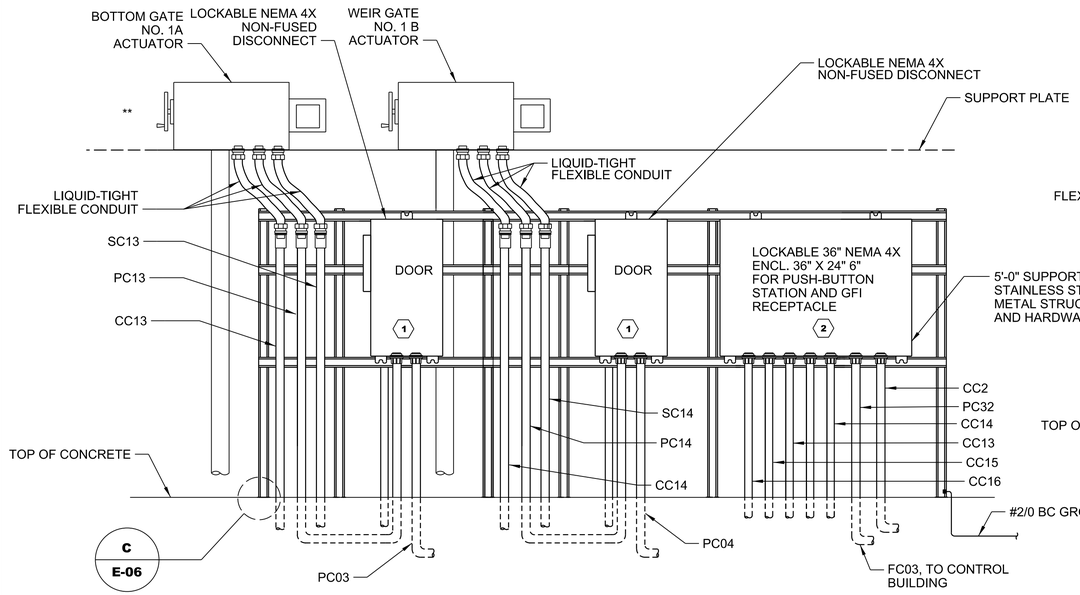

A E-12 **SECTION - LANDSIDE GATES 1A AND 1B**

SCALE: N.T.S.

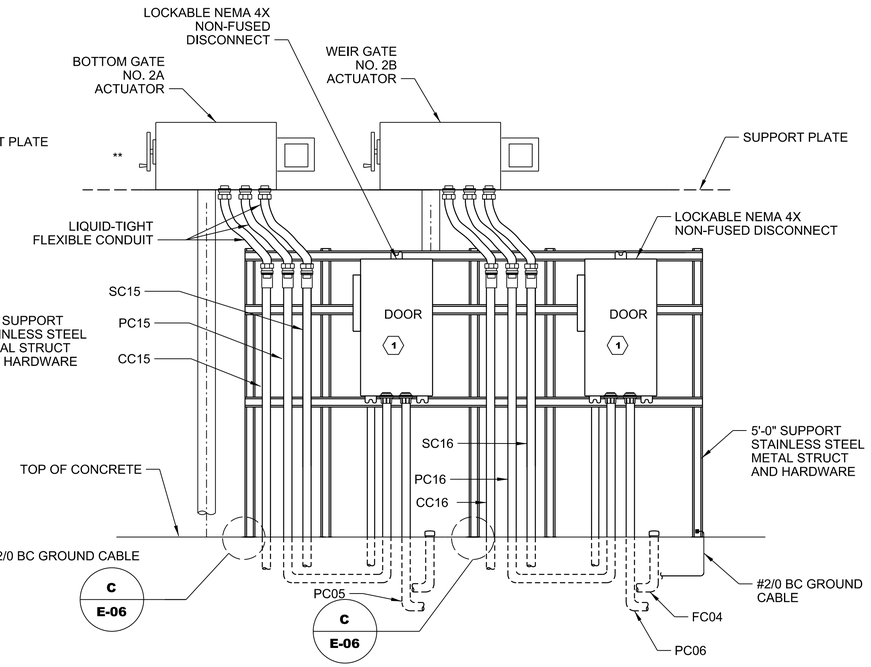

B E-12 **SECTION - LANDSIDE GATES 2A AND 2B**

SCALE: N.T.S.

US Army Corps of Engineers
Jacksonville District

No.	STM	ZONE	DESCRIPTION
N	A-N	ABCD...	

DEPARTMENT OF THE ARMY
CORPS OF ENGINEERS
JACKSONVILLE DISTRICT
JACKSONVILLE, FLORIDA

DESIGNED BY: DESIGNER
DATE: APRIL 2016
DWN BY: J.D.H.
CKD BY: S.J.P.
SOLICITATION NO.: W912EP-16-R-0010
SUBMITTED BY: N/A
CONTRACT NO.: N/A
PLOT SCALE: AS SHOWN
PLOT DATE: Apr 25, 2016
FILE NUMBER: N/A
FILE NAME: 114527-HHDRCRIP3-E1313

HERBERT HOOVER DIKE REHABILITATION PROJECT
STRUCTURE REPLACEMENTS

S-291 (IP-3) RECONSTRUCTION

ELECTRICAL

LANDSIDE OPERATING PLATFORM DETAILS

DRAWING NO.

E-13

pw:\\COE-SAJPWP02JAX.saj.ds.usace.army.mil:SAJPW\Documents\C&SF\Herbert Hoover Dike Rehabilitation\03-Culvert Rehabilitation\S-292(IP-1), S-290(IP-2), S-291(IP-3) Culvert Reconstruction\070 - Plans\IP-3\15 Electrical\E-13

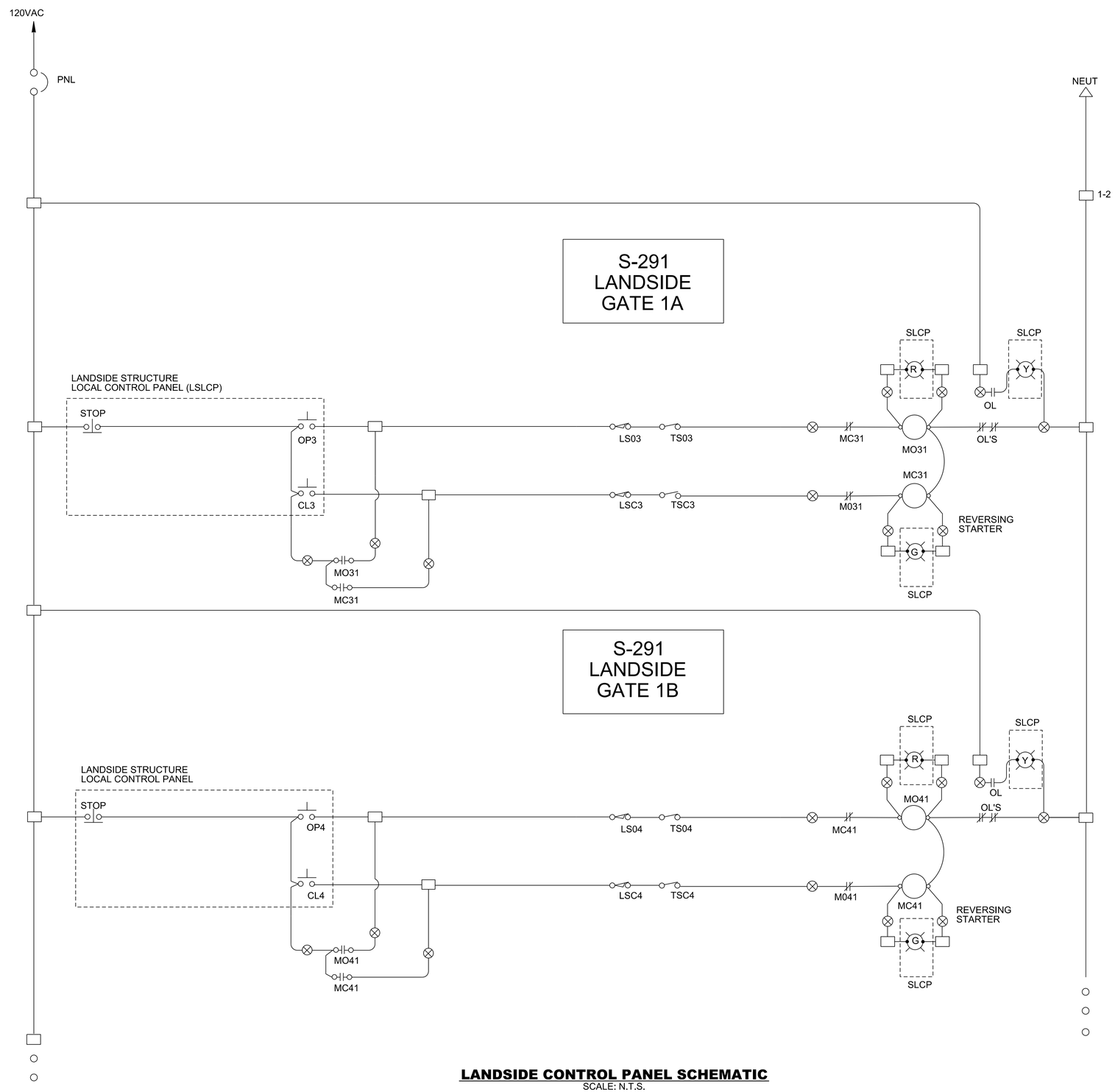

LANDSIDE CONTROL PANEL SCHEMATIC
SCALE: N.T.S.

CONTINUED ON SHEET E-15

NOTE:

1. FOR ELECTRICAL NOTES, LEGEND, AND ABBREVIATIONS, SEE DRAWING E-01 AND E-02.

LEGEND:

O.L. THERMAL OVERLOAD CONTACT WITH STARTER

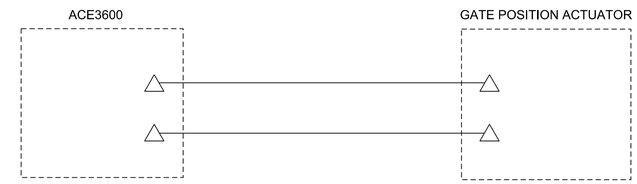

GATE POSITION INDICATION CIRCUIT
SCALE: N.T.S.
(FUTURE CONNECTION, INSTALL CONDUIT ONLY)

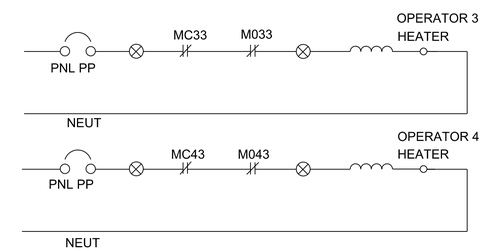

DRIVE OPERATOR HEATER CIRCUITS
SCALE: N.T.S.

US Army Corps of Engineers
Jacksonville District

No.	SYM	ZONE	DESCRIPTION

DESIGNED BY: V.L. | DATE: APRIL 2016
DWN BY: J.D.H. | CKD BY: S.J.P. | SOLICITATION NO.: W912EP-16-R-0010
SUBMITTED BY: N/A | CONTRACT NO.: N/A
PLOT SCALE: AS SHOWN | PLOT DATE: Apr 25, 2016 | FILE NUMBER: N/A
FILE NAME: 114527-HHDRCRIP3-EI614.DGN

DEPARTMENT OF THE ARMY
CORPS OF ENGINEERS
JACKSONVILLE DISTRICT
JACKSONVILLE, FLORIDA

HERBERT HOOVER DIKE REHABILITATION PROJECT
STRUCTURE REPLACEMENTS
S-291 (IP-3) RECONSTRUCTION
ELECTRICAL
LANDSIDE CONTROL SCHEMATIC
SHEET 1

DRAWING NO.
E-14

SAFETY ON THIS JOB DEPENDS ON YOU

pw:\\COE-SAJPW\P02JAX.saj.ds.usace.army.mil:SAJPW\Documents\C&SF\Herbert Hoover Dike Rehabilitation\03-Culvert Rehabilitation\S-292(IP-1), S-290(IP-2), S-291(IP-3) Culvert Reconstruction\070 - Plans\IP-3\15 Electrical\E-14

SAFETY ON THIS JOB DEPENDS ON YOU

CONTINUED ON SHEET E-14

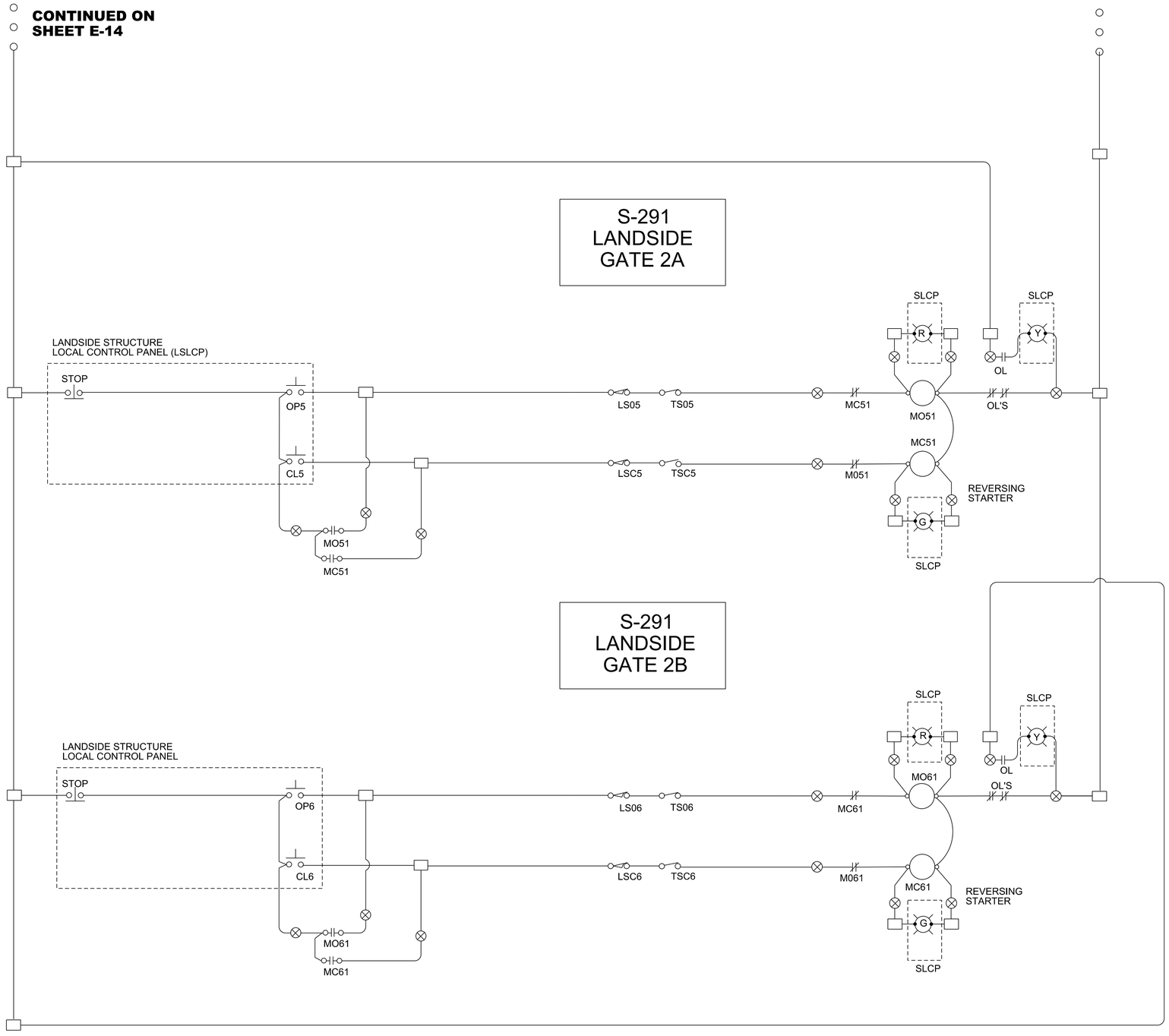

LANDSIDE CONTROL PANEL SCHEMATIC
SCALE: N.T.S.

NOTE:

1. FOR ELECTRICAL NOTES, LEGEND, AND ABBREVIATIONS, SEE DRAWING E-01 AND E-02.

LEGEND:

O.L. THERMAL OVERLOAD CONTACT WITH STARTER

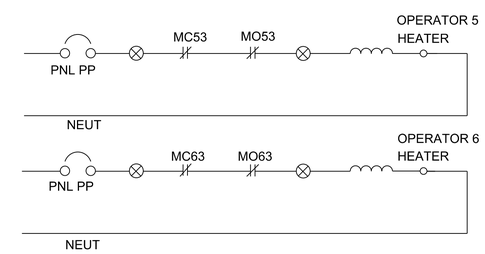

DRIVE OPERATOR HEATER CIRCUITS
SCALE: N.T.S.

US Army Corps of Engineers
Jacksonville District

No.	SYM	ZONE	DESCRIPTION

DESIGNED BY: V.L. | DATE: APRIL 2016
DWN BY: J.D.H. | CKD BY: J.H.H. | SOLICITATION NO.: W912EP-16-R-0010
SUBMITTED BY: N/A | CONTRACT NO.: N/A
PLOT SCALE: AS SHOWN | PLOT DATE: Apr 25, 2016 | FILE NUMBER: N/A
FILE NAME: 114527-HHDRCRIP3-EI615.DGN

DEPARTMENT OF THE ARMY
CORPS OF ENGINEERS
JACKSONVILLE DISTRICT
JACKSONVILLE, FLORIDA

HERBERT HOOVER DIKE REHABILITATION PROJECT
STRUCTURE REPLACEMENTS
S-291 (IP-3) RECONSTRUCTION
ELECTRICAL
LANDSIDE CONTROL SCHEMATIC
SHEET 2

DRAWING NO.
E-15

pw:\\COE-SAJPWP02JAX.saj.ds.usace.army.mil:SAJPW\Documents\C&SF\Herbert Hoover Dike Rehabilitation\03-Culvert Rehabilitation\S-292(IP-1), S-290(IP-2), S-291(IP-3) Culvert Reconstruction\070 - Plans\IP-3\15 Electrical\E-15

INSTRUMENT, SYSTEMS, AND AUTOMATION SOCIETY TABLE

LETTER	FIRST LETTER		SUCEEDING LETTERS		
	PROCESS OR INITIATING VARIABLE	MODIFIER	READOUT OR PASSIVE FUNCTION	OUTPUT FUNCTION	MODIFIER
A	ANALYSIS (*)		ALARM		USERS CHOICE (*)
B	BURNER FLAME		USERS CHOICE (*)	USERS CHOICE (*)	
C	CONDUCTIVITY			CONTROL	CLOSE
D	DENSITY (S.G.)	DIFFERENTIAL			
E	VOLTAGE		PRIMARY ELEMENT		
F	FLOW RATE	RATIO			
G	GAUGE		GLASS	GATE	
H	HAND (MANUAL)				HIGH
I	CURRENT		INDICATE		
J	POWER	SCAN			
K	TIME OR SCHEDULE			CONTROL STATION	
L	LEVEL OR LIMIT		LIGHT (PILOT)		LOW
M	MOTION				MIDDLE
N	TORQUE		USERS CHOICE (*)	USERS CHOICE (*)	NORMAL
O	LOOP VEH. DETECTOR		OFFICE		OPEN
P	PRESSURE OR VACUUM		POINT (TEST CONNECTION)		
Q	QUANTITY OR EVENT		INTEGRATE		
R	RATIO		RECORD OR PRINT		
S	SPEED OR FREQUENCY	SAFETY		SWITCH	
T	TEMPERATURE			TRANSMIT	
U	MULTIVARIABLE (*)		MULTIFUNCTION (*)		
V	VISCOSITY			VALVE	
W	WEIGHT OR FORCE		WELL		
X	UNCLASSIFIED (*)		UNCLASSIFIED (*)	UNCLASSIFIED (*)	UNCLASSIFIED (*)
Y	PHOTO CELL		LIGHT SOURCE	RELAY OR COMPUTE (*)	
Z	POSITION			DRIVE, ACTUATE OR UNCLASSIFIED FINAL CONTROL ELEMENT	

(*) WHEN USED, EXPLANATION IS SHOWN ADJACENT TO INSTRUMENT SYMBOL

INSTRUMENT IDENTIFICATION

- FIRST LETTER(S)
- SUCCEEDING LETTERS
- LOOP NUMBER MODIFIER (USED WITH TWO OR MORE INSTRUMENTS HAVING THE SAME FUNCTIONAL LOOP IDENTIFICATION)
- LOOP NUMBER
- UNIT PROCESS NUMBER

L A B
X-Y-Z

- FIELD MOUNTED INSTRUMENT
- REAR OF PANEL MOUNTED INSTRUMENT
- FRONT OF PANEL MOUNTED INSTRUMENT
- MOTOR STATUS/CONTROL WITH INTERLOCKS (OFTEN LOCATED IN MCC)
- PLC (PROGRAMMABLE LOGIC CONTROLLER)
- TELEMETRY EQUIPMENT
- ALARM ANNUNCIATOR OR STATUS INDICATION LIGHT
- T — TIMER

INSTRUMENT LINE SYMBOLS

- PRIMARY PROCESS FLOW
- FUTURE PRIMARY PROCESS FLOW
- SECONDARY PROCESS FLOW, CONNECTION TO PROCESS FLOW, MECHANICAL LINK OR INSTRUMENT SUPPLY
- ELECTRICAL SIGNAL (DISCRETE)
- A — ELECTRICAL SIGNAL (ANALOG)
- FIBER OPTIC DATA HIGHWAY
- ICXX — PROCESS OR SIGNAL CONTINUED SOMEWHERE ELSE (X=1,2,3)

VALVES AND GATES

- BUTTERFLY
- GATE
- SWING CHECK
- BALL
- GLOBE
- DIAPHRAGM
- PLUG
- 3-WAY GLOBE
- CULVERT GATE
- PRESSURE SUSTAINING VALVE
- AIR RELEASE VALVE

INSTRUMENTATION LEGEND

PUMPS AND COMPRESSORS

- CENTRIFUGAL PUMP
- CENTRIFUGAL PUMP (WET PIT)
- AIR COMPRESSOR
- VERTICAL TURBINE PUMP
- METERING PUMP
- PROGRESSING CAVITY PUMP
- SUMP PUMP

ACTUATOR OR OPERATORS

- SV — SOLENOID VALVE
- M — MOTOR
- H — HYDRAULIC
- P — PNEUMATIC

PRIMARY ELEMENTS

- WEIR
- ORIFICE PLATE
- VENTURI
- PROPELLER METER
- ROTAMETER
- ELECTROMAGNETIC FLOWMETER
- VORTEX METER
- LEVEL (BUBBLE TUBE)
- SUSPENDED SOLIDS
- LEVEL (FLOAT)
- LEVEL (ULTRASONIC)
- ULTRASONIC FLOWMETER (CLAMP-ON)
- RF ADMITTANCE
- PARSHALL FLUME
- DENSITY METER (X; N = NUCLEAR, O = OPTICAL, U = ULTRASONIC)
- PITOT-STATIC

INSTRUMENT ABBREVIATIONS

ACC	ACCELERATION
AT	AUTO-TEST
BFP	BELT FILTER PRESS
CL2	CHLORINE
CLW	CLEARWELL
COM	COMMON
COND	CONDUCTIVITY
CP	CONTROL PANEL
DI, AI	DIGITAL INPUT, ANALOG INPUT
DO, AO	DIGITAL OUTPUT, ANALOG OUTPUT
D.O.	DISSOLVED OXYGEN
DR	DISTANCE RELAY
EFFL	EFFLUENT
EP	ELECTRICAL PANEL
ES	EMERGENCY STOP
ETM	ELAPSED TIME METER
FD	CHEMICAL FEEDER
FIL	FILTER
FIS	FLOW INDICATING SWITCH
FOC	FIBER OPTIC CABLE
FRS	FORWARD-REVERSE-STOP
GEN	GENERATOR
GPS	GLOBAL POSITIONING SYSTEM
HLO	HIGH-LOW-OFF
HLOR	HIGH-LOW-OFF-REMOTE
HOA	HAND-OFF-AUTO
HOR	HAND-OFF-REMOTE
HOTC	HAND-OFF-TIMER-COMPUTER
H/L	HIGH LOW
HSP	HIGH SERVICE PUMP
IND	INDICATION
INFL	INFLUENT
JP	JOCKEY PUMP
LOR	LOCAL-REMOTE-OFF
LOS	LOCK-OUT-STOP
LPU	LINE PROTECTION UNIT
LR	LOCAL-REMOTE
MCC	MOTOR CONTROL CENTER
MCP	MAIN CONTROL PANEL
ME	MISCELLANEOUS EQUIPMENT
M.G.	MILLION GALLON
MOA	MANUAL-OFF-AUTO
MOV	MOTOR OPERATED VALVE
OCA	OPEN-CLOSE-AUTO
OC	OPEN-CLOSE
OO	ON-OFF
ORP	OXIDATION REDUCTION POTENTIAL
OSC	OPEN-CLOSE-STOP
OSCR	OPEN-CLOSE-STOP-REMOTE
PAFM	POWER APPLIED FOR MOTION
PRES	PRESSURE
PH	HYDROGEN ION CONCENTRATION
RES	RESTORE
REF	REFERENCE
RF	RF (ADMITTANCE) LEVEL MONITOR
RIP	REMOTE I/O PANEL
RLS	RAISE LOWER STOP
RSP	REMOTE SET POINT
SA	SURGE ARRESTER
SCC	STATION CONTROL CENTER
SEC	SECONDARY
SF	SONIC FLOWMETER
SP	SETPOINT
SSL	SPEED SWITCH LOW
SS	STOP/START
SST	STAINLESS STEEL
STOR	STORAGE
SUS	SUSPENDED SOLIDS
SSRVS	SOLID STATE REDUCED VOLTAGE STARTER
TD	THERMAL DISPERSION
TP	TRANSFER PUMP
VFD	VARIABLE FREQUENCY DRIVE

NOTES:

1. THE INSTRUMENT AND CONTROL SUPPLIER SHALL HAVE A U.L. APPROVED PANEL SHOP.
2. ALL CONTROL PANELS SHALL BE FURNISHED AND INSTALLED WITH A 1P-15A CIRCUIT BREAKER.
3. COMPONENTS AND PANELS SHOWN WITH A DOUBLE ASTERISK (**) ARE TO BE PROVIDED AS PART OF A PACKAGED SYSTEM, MECHANICAL SYSTEM OR PROVIDED AS PART OF THE ELECTRICAL SYSTEM.
4. COMPONENTS AND PANELS SHOWN WITH A DIAMOND (◆) ARE TO BE PROVIDED UNDER SECTION "INSTRUMENTATION, CONTROLS AND MONITORING SYSTEM - GENERAL PROVISIONS"
5. NOT ALL SYMBOLS, LEGEND INFORMATION, ABBREVIATIONS, AND NOTES SHALL BE USED FOR THIS PROJECT.

SAFETY ON THIS JOB DEPENDS ON YOU

US Army Corps of Engineers, Jacksonville District

No.	SYM.	ZONE	DESCRIPTION

DEPARTMENT OF THE ARMY
CORPS OF ENGINEERS
JACKSONVILLE DISTRICT
JACKSONVILLE, FLORIDA

DESIGNED BY: V.L. | DATE: OCTOBER 2015
DWN BY: J.D.H. | CKD BY: J.H.H. | SOLICITATION NO.: W912EP-16-R-0010
SUBMITTED BY: N/A | CONTRACT NO.: N/A
PLOT SCALE: AS SHOWN | PLOT DATE: Apr 25, 2016 | FILE NUMBER: N/A
FILE NAME: 114527-HHDRCRIP3-TS001.DGN

HERBERT HOOVER DIKE REHABILITATION PROJECT
STRUCTURE REPLACEMENTS

S-291 (IP-3) RECONSTRUCTION

TELECOMMUNICATIONS

SCADA LEGEND AND SYMBOLS

DRAWING NO.

T-01

pw:\\COE-SAJPWP02JAX.saj.ds.usace.army.mil:SAJPW\Documents\C&SF\Herbert Hoover Dike Rehabilitation\03-Culvert Rehabilitation\S-292(IP-1), S-290(IP-2), S-291(IP-3) Culvert Reconstruction\070 - Plans\IP-3\17 Telecommunications\T-01

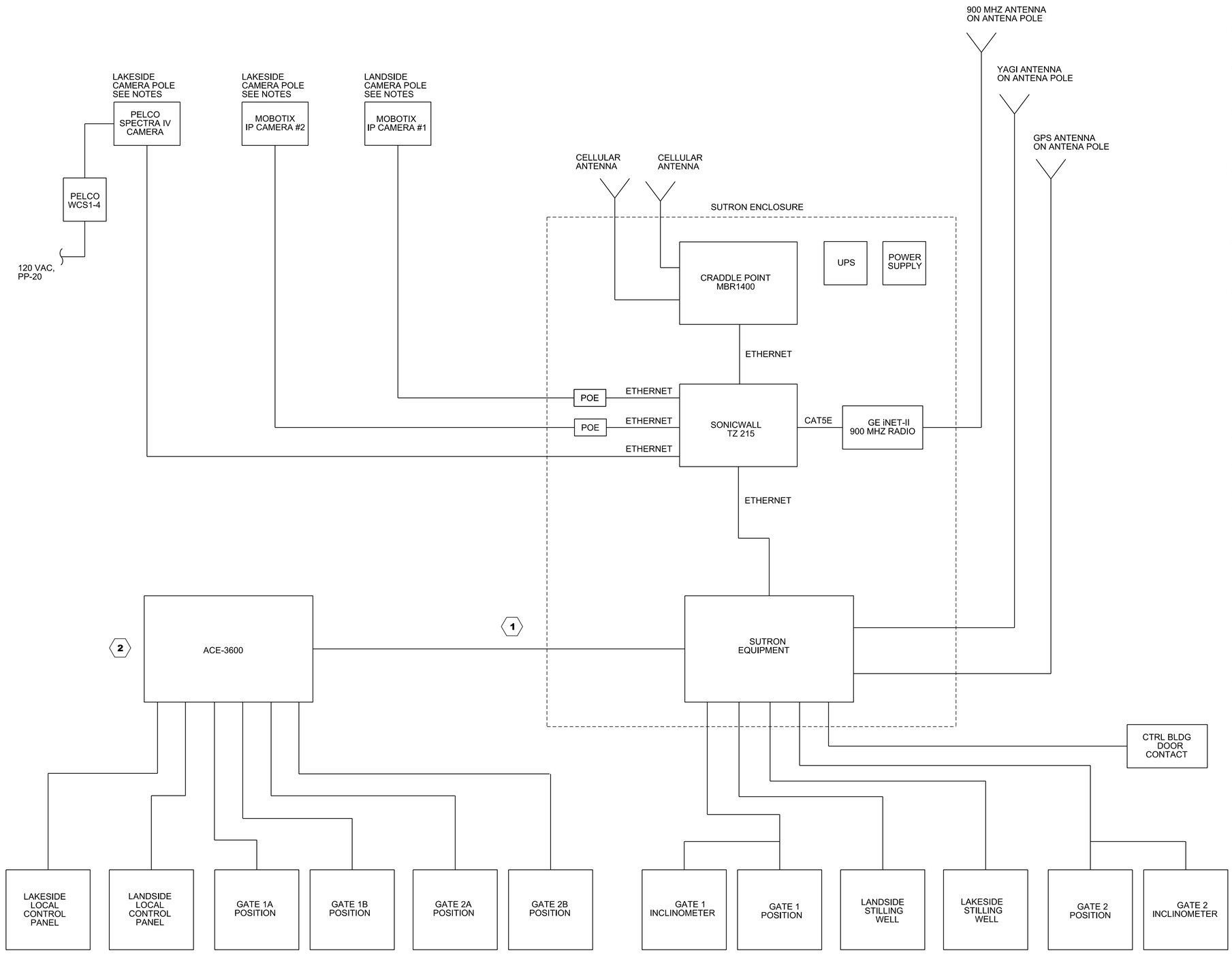

TYPICAL MONITORING SYSTEM DIAGRAM

SCALE: N.T.S.

NOTES:

1. SEE STRUCTURAL GENERAL PLAN FOR LOCATIONS OF CAMERA AND ANTENA POLES.
2. SEE DRAWINGS E-03 THROUGH E-15 FOR ELECTRICAL.
3. SEE DRAWINGS T-03 THROUGH T-05 FOR TELEMETRY.
4. SEE DRAWING T-06 FOR ANTENNA POLE DETAILS. SEE DRAWING T-07 FOR CAMERA POLE DETAILS. SEE DRAWING T-08 AND T-09 FOR INCLINOMETER INSTALLATION DETAILS.
5. PROVIDE MOUNTING HARDWARE SUCH AS ANCHOR BOLTS, LOCKNUTS, AND ETC., POLE STRAP OR ADAPTER, AND OTHER ACCESSORIES FOR PROPER INSTALLATION OF CAMERA, ANTENNA AND OTHER EQUIPMENT PER MANUFACTURER' S RECOMMENDATIONS.
6. PROVIDE POWER-OVER-ETHERNET (POE) TRANSFORMERS AND MOUNTING HARDWARE PER MANUFACTURER' S RECOMMENDATIONS FOR MOBOTIX CAMERAS INSIDE THE SUTRON CABINET.
7. PROVIDE A POWER CIRCUIT FOR PELCO WCS1-4 ON CAMERA POLE. FIELD COORDINATES LOCATION.
8. PROVIDE WIRELESS ROUTER CRADDLE POINT MBR1400 OR APPROVED EQUAL INSIDE THE SUTRON CABINET. FIELD COORDINATES CELLULAR ANTENNA LOCATION OUTSIDE THE CABINET.
9. PROVIDE SONICWALL TZ 215 OR APPROVED EQUAL INSIDE THE SUTRON CABINET.
10. PROVIDE GE iNET-II 900 RADIO INSIDE THE SUTRON CABINET. PROVIDE A 900 MHZ ANTENNA MOUNTING ON POLE AS INDICATED. PROVIDE ONE SPARE RADIO.
11. PROVIDE ONE SPARE CAT5E LINE IN 1-INCH CONDUIT FROM SUTRON CABINET TO EACH CAMERA POLE. PROVIDE ONE SPARE CAT5E LINE IN 2-INCH CONDUIT FROM SUTRON CABINET TO ANTENNA POLE. PROVIDE A NEMA 4X STAINLESS STEEL JUNCTION BOX MOUNTING ON POLE FOR EACH CAT5E LINE. FIELD COORDINATES PROPER LOCATIONS AND SIZE OF JUNCTION BOXES.
12. 3G/4G MODEM/ROUTER CAPABLE OF USING ATT OR VERIZON 3G/4G SERVICE SHALL BE PROVIDED.
13. PROVIDE A CIRCUIT FOR SHELTER DOOR SECURITY ALARM CONTACT.
14. PROVIDE SURGE SUPPRESSION FOR ALL CABLES TO CAMERA.
15. WITH THE EXCEPTTION OF THE GE INET RADIO AND THE SUTRON EQUIPMENT, REFERENCED MANUFACTURERS SHALL BE CONSIDERED "OR APPROVED EQUAL."

CAMERA NOTES:

1. PROVIDE MOBOTIX ALLROUNDDUAL M15 WITH MX-SM-D23-PW, MX-SMN23-BL, SURGE PROTECTOR MX-OVERVOLTAGE-PROTECTION-BOX-RJ45 AND MX-SM-OPT-POL POLORIZATION FILTER. EACH CAMERA SHALL HAVE AN SD 64GB CARD INSTALLED.
2. PELCO CAMERA SHALL HAVE TXB-N MODULE.

KEYNOTES:

1. PROVIDE DUPLICATE ANALOG INPUTS (AI) FROM GATE 1 AND 2 POSTION SENSORS, GATE 1 AND 2 INCLINOMETERS, AND HEADWATER AND TAILWATER STILLING WELLS IN 2" CONDUIT FOR MOTOROLA ACE-3600.
2. PROVIDE A 36" X 30" X 12" NEMA 4 ENCLOSURE FOR MOTOROLA ACE-3600 TELEMETRY SYSTEM (NIC) FOR FUTURE REMOTE OPERATION FROM SOUTH FLORIDA WATER MANAGEMENT DISTRICT (SFWMD). CABLES FED THROUGH INSIDE ACE-3600 ENCLOSURE SHALL BE PROPERLY LABELED. PROVIDE ADDITIONAL 5 FEET FOR EACH CABLE AND ROLLED UP NEATLY IN SEPARATE BUNDLES FOR SPECIFIC FUNCTION INSIDE THE ENCLOSURE. SFWMD SHALL FURNISH AND INSTALL ACE-3600 SYSTEM AND ALL OTHER REQUIRED EQUIPMENT AND PROVIDE COMPLETE WIRING AND OPERATION SOFTWARE.

SAFETY ON THIS JOB DEPENDS ON YOU

US Army Corps of Engineers, Jacksonville District

No.	SYM	ZONE	DESCRIPTION

DEPARTMENT OF THE ARMY
CORPS OF ENGINEERS
JACKSONVILLE DISTRICT
JACKSONVILLE, FLORIDA

DESIGNED BY: V.L.
DWN BY: J.D.H.
CKD BY: J.H.H.
SUBMITTED BY: N/A
PLOT SCALE: AS SHOWN
PLOT DATE: Apr 25, 2016
DATE: OCTOBER 2015
SOLICITATION NO.: W912EP16-R-0010
CONTRACT NO.: N/A
FILE NUMBER: N/A
FILE NAME: 114527-HHDRCRIP3-TS602.DGN

HERBERT HOOVER DIKE REHABILITATION PROJECT
STRUCTURE REPLACEMENTS
S-291 (IP-3) RECONSTRUCTION
TELECOMMUNICATIONS
SUTRON SYSTEM MONITORING DIAGRAM

DRAWING NO.
T-02

pw:\\COE-SAJPWP02JAX.saj.ds.usace.army.mil:SAJPW\Documents\C&SF\Herbert Hoover Dike Rehabilitation\03-Culvert Rehabilitation\S-292(IP-1), S-290(IP-2), S-291(IP-3) Culvert Reconstruction\070 - Plans\IP-3\17 Telecommunications\T-02

SAFETY ON THIS JOB DEPENDS ON YOU

NOTE:

1. CONTRACTOR SHALL COORDINATE WITH EQIPMENT PROVIDED.

3. REFERENCED ITEMS: 1A THRU 2M, 3D, 3G, 3J, 5A, 5B, 5C, 6A, AND 6E SHALL BE MANUFACTURERS AS SHOWN "OR APPROVED EQUAL."

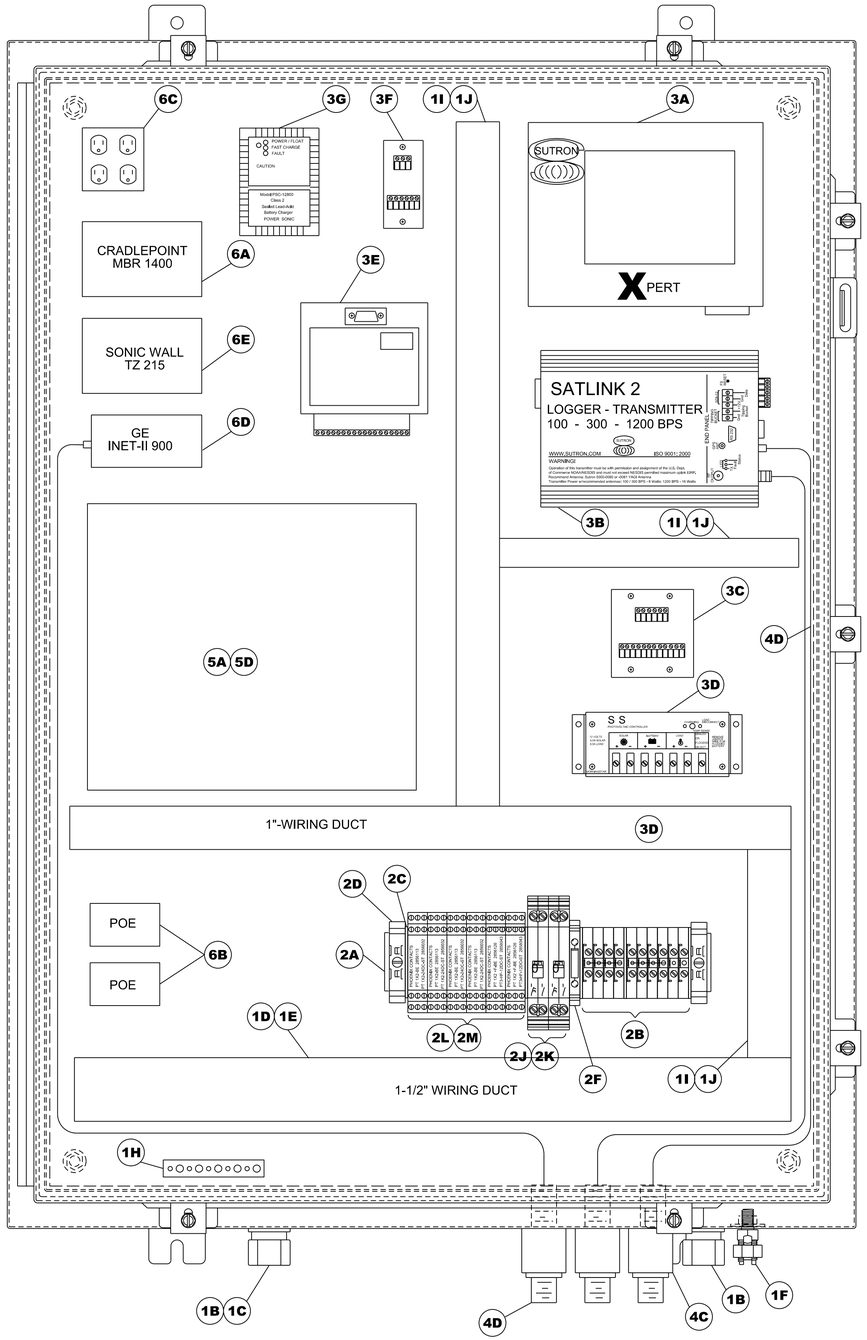

SUTRON PANEL LAYOUT

SCALE: N.T.S

SUTRON SYSTEM COMPONENTS

REF #	MANUFACTURER	PART #	DESCRIPTION
1A	HOFFMAN	A-48H3612SSLP, ADP1	48H"x36W"x12D" STAINLESS STEEL ENCLOSURE WITH INTERIOR DOOR POCKET, POWDER COAT EXTERIOR WHITE
1B	CROUSE HINDS	CGFP193	GALVANIZED STEEL CORD GRIP FOR 3/8" CORD
1C	POREX	INTERSTATE SPECIALTY PRODUCTS #5541	3/8" DIA. X 1" LONG HYDROPHOBIC FILTER MATERIAL
1D	PANDUIT	F1.5X1.5LG6	1-1/2"x1-1/2" WIREWAY
1E	PANDUIT	C1.5LG6	1-1/2" WIREWAY COVER
1F	BURNDY	KC17B1	TYPE SP SERVICE GRD POST CONNECTOR
1G	HOFFMAN	A-30P24	BACK PANEL
1H	ILSCO	N1186-B	DUAL RATED GROUND BAR
1I	PANDUIT	F1X1LG6	1"x1" WIREWAY
1J	PANDUIT	C1LG6	1" WIREWAY COVER
2A	PHOENIX CONTACT		
	PHOENIX CONTACT	08 01 73 3	DIN RAIL
2B	PHOENIX CONTACT	30 04 36 2	TERMINAL BLOCK
2C	PHOENIX CONTACT	30 03 02 0	TERMINAL BLOCK END COVER
2D	PHOENIX CONTACT	08 00 88 6	END CLAMPS
2E	PHOENIX CONTACT	08 00 30 7	TERMINAL STRIP MARKER
2F	PHOENIX CONTACT	30 04 03 2	KNIFE DISCONNECT
2G	PHOENIX CONTACT	55 31 72 3	10AMP CIRCUIT BREAKER-1 POLE
2H	PHOENIX CONTACT	13 02 21 5	PARTITION PLATE
2I	PHOENIX CONTACT	02 03 25 0	FIXED BRIDGE
2J	PHOENIX CONTACT	28 56 12 6	PLUGTRAB BASE
2K	PHOENIX CONTACT	28 58 04 3	PLUGTRAB PLUG
2L	PHOENIX CONTACT	28 56 11 3	PLUGTRAB BASE
2M		28 56 03 2	PLUGTRAB PLUG
3A	SUTRON	XPERT2	MEASUREMENT AND CONTROL MODULE (DATA LOGGER)
3B	SUTRON	SATLINK-2	TRANSMITTER
3C	SUTRON	6461-1242-1	POWER TERMINATION
3D	MORNINGSTAR	SS-6	SOLAR CONTROLLER
3E	SUTRON	8080-0007	ANALOG I/O MODULE
3F	SUTRON	6461-1241	SDI-12 TERMINATION
3G	POWER SONIC	PSC-12800A	POWER SUPPLY
3H	N/A	N/A	GATE POSITION INDICATOR IN GATE ACTUATOR
3I	SUTRON	56-0540	STILLING WELL SDI-12 SHAFT ENCODER
3J	APPLIED GEOMECHANICS	A906-ST-B	APPLIED GEOMECHANICS INCLINOMETER
3K	N/A	N/A	GATE POSITION INDICATOR IN GATE ACTUATOR
4A	SUTRON	5000-0081	YAGI GOES SATELLITE ANTENNA
4B	SUTRON	5000-0170	JAM RESISTANT GPS ANTENNA
4C	SUTRON	8111-1113-1	RF COAX LIGHTNING PROTECTOR
4D	N/A	N/A	LIGHTNING PROTECTOR
4E	SUTRON	6411-1162	ANTENNA CABLE
4F	SUTRON	6411-1561	ANTENNA CABLE
5A	POWER SONIC	PS12400	12 VOLT 40 AH BATTERY
5B	POWER UP SOLAR	HPM 18/30	SOLAR PANEL MOUNTING BRACKET
5C	POWER UP SOLAR	BP SX 40	40 WATT SOLAR PANEL
5D	BATTERY SHELF	N/A	CUSTOM FABRICATED, MOUNTS TO BACK PANEL
6A	CRADLEPOINT		CRADLEPOINT BROADBAND ROUTER
6B	N/A		POWER-OVER-ETHERNET (POE)
6C	N/A		AC QUAD-RECEPTACLE
6D	GE		GE iNET-II 900 RADIO
6E	SONICWALL		SONICWALL TZ 215

US Army Corps of Engineers
Jacksonville District

No.	SYM	ZONE	DESCRIPTION

DESIGNED BY: V.L. | DATE: OCTOBER 2015
DWN BY: J.D.H. | CKD BY: J.H.H. | SOLICITATION NO.: W912EP16-R-0010
SUBMITTED BY: N/A | CONTRACT NO.: N/A
PLOT SCALE: AS SHOWN | PLOT DATE: Apr 25, 2016 | FILE NUMBER: N/A
FILE NAME: 114527-HHDRCRIP3-T2103.DGN

DEPARTMENT OF THE ARMY
CORPS OF ENGINEERS
JACKSONVILLE DISTRICT
JACKSONVILLE, FLORIDA

HERBERT HOOVER DIKE REHABILITATION PROJECT
STRUCTURE REPLACEMENTS

S-291 (IP-3) RECONSTRUCTION

TELECOMMUNICATIONS

SUTRON SYSTEM COMPONETS

DRAWING NO.

T-03

pw:\\COE-SAJPW\P02JAX.saj.ds.usace.army.mil:SAJPW\Documents\C&SF\Herbert Hoover Dike Rehabilitation\03-Culvert Rehabilitation\S-292(IP-1), S-290(IP-2), S-291(IP-3) Culvert Reconstruction\070 - Plans\IP-3\17 Telecommunications\T-03

SAFETY ON THIS JOB DEPENDS ON YOU

NOTES:

1. SEE DRAWING T-05 FOR WIRING DIAGRAM CONTINUATION, GENERAL NOTES, AND OTHER DETAILS.
2. SEE DRAWING T-03 FOR SUTRON SYSTEM COMPONENT NOTES/SCHEDULE.

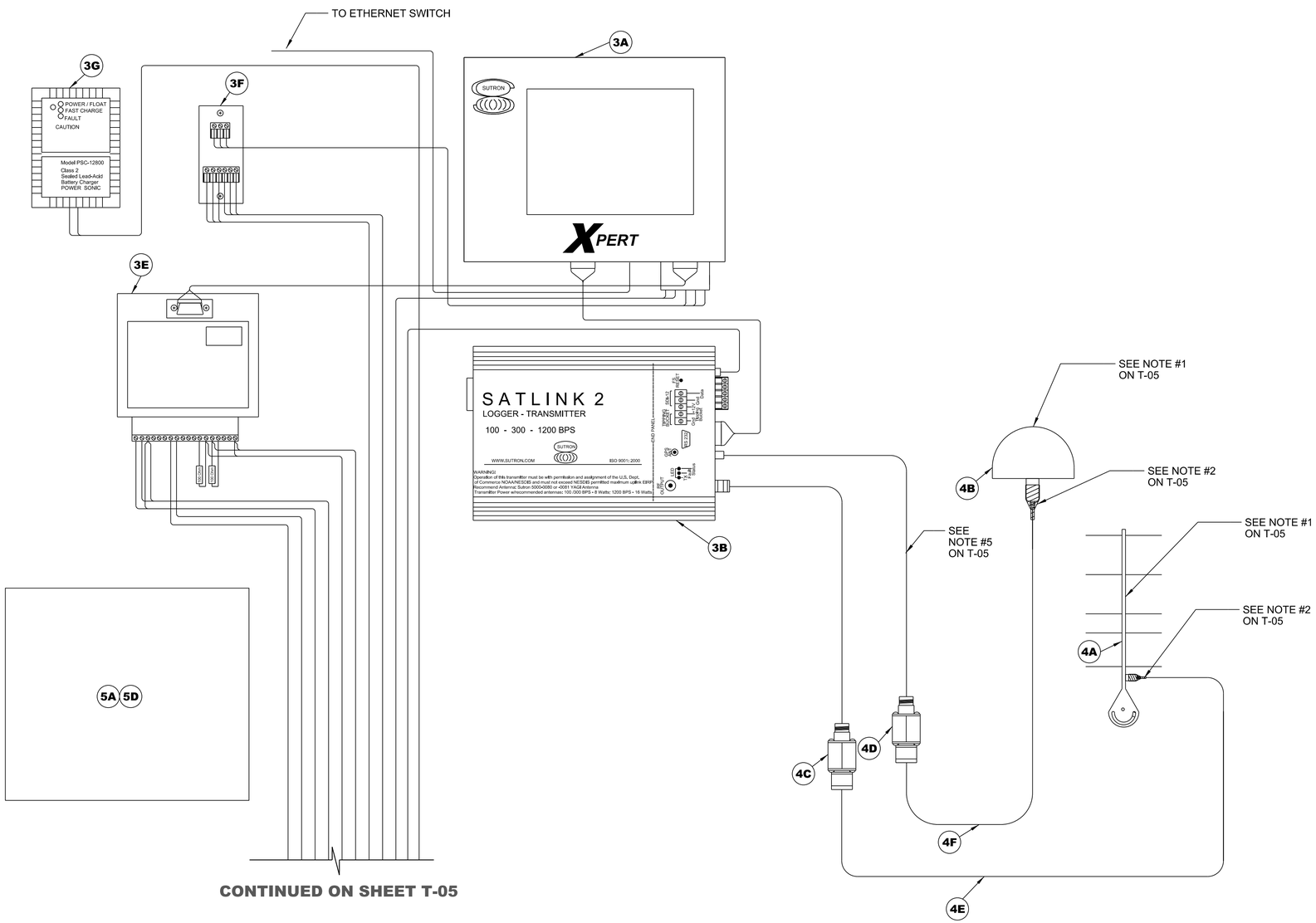

CONTINUED ON SHEET T-05

SUTRON
PANEL WIRING DIAGRAM
SCALE: N.T.S

US Army Corps of Engineers
Jacksonville District

No.	SYM	ZONE	DESCRIPTION

DESIGNED BY: V.L.
DWN BY: J.D.H.
CKD BY: J.H.H.
SUBMITTED BY: N/A
DATE: OCTOBER 2015
SOLICITATION NO.: W912EP16-R-0010
CONTRACT NO.: N/A
PLOT SCALE: N/A
PLOT DATE: Apr 25, 2016
FILE NUMBER: N/A
FILE NAME: 114527-HHDRCRIP3-TS604.DGN

DEPARTMENT OF THE ARMY
CORPS OF ENGINEERS
JACKSONVILLE DISTRICT
JACKSONVILLE, FLORIDA

HERBERT HOOVER DIKE REHABILITATION PROJECT
STRUCTURE REPLACEMENTS
S-291 (IP-3) RECONSTRUCTION
TELECOMMUNICATIONS
SUTRON PANEL WIRING DIAGRAM, SHEET 1

DRAWING NO.
T-04

pw:\\COE-SAJPWP02IAX.saj.ds.usace.army.mil:SAJPW\Documents\C&SF\Herbert Hoover Dike Rehabilitation\03-Culvert Rehabilitation\S-292(IP-1), S-290(IP-2), S-291(IP-3) Culvert Reconstruction\070 - Plans\IP-3\17 Telecommunications\T-04

SAFETY ON THIS JOB DEPENDS ON YOU

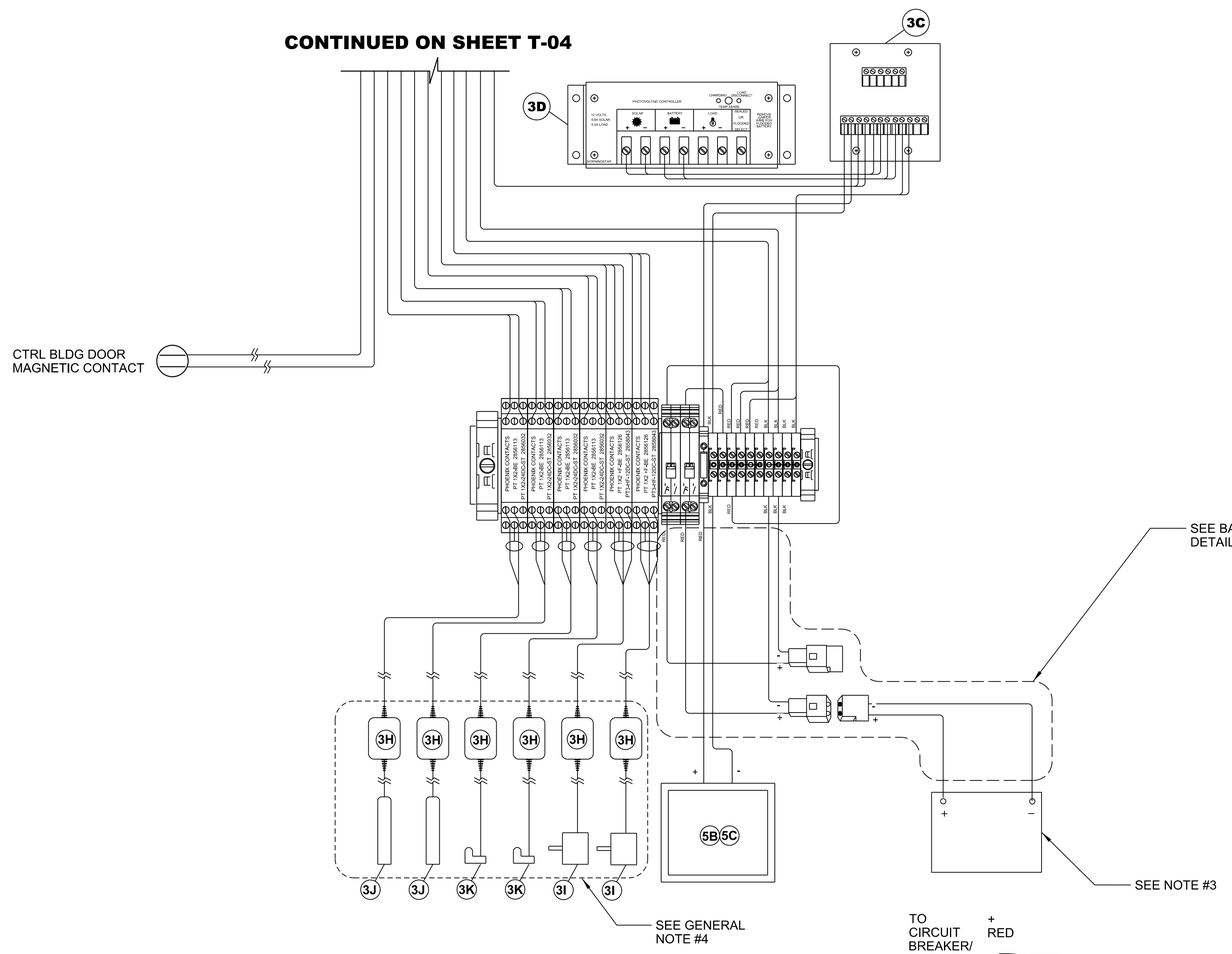

SUTRON
PANEL WIRING DIAGRAM
SCALE: A

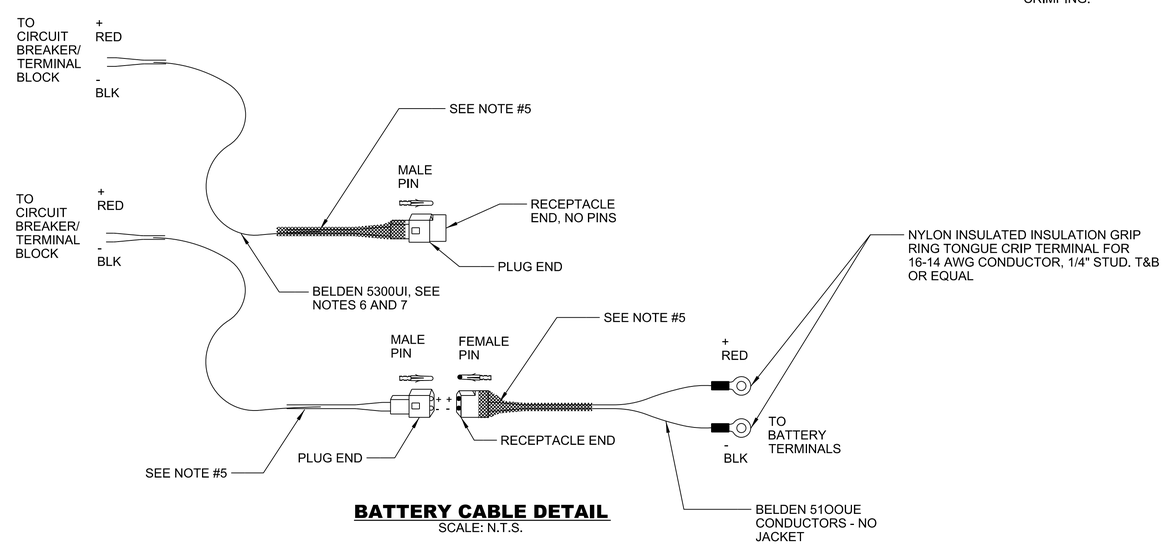

BATTERY CABLE DETAIL
SCALE: N.T.S.

NOTES:

1. LOCATE ANTENNA ON POLE, REFERENCE STANDARD DETAIL SHEET T-06. MOUNT WITH BRACKETS FURNISHED WITH ANTENNA. FURNISH HOT DIPPED GALVANIZED U-BOLTS TO SECURE MOUNTING BRACKETS TO MAST PER MANUFACTURER'S INSTALLATION INSTRUCTIONS
2. WEATHER SEAL CABLE TO ANTENNA CONNECTION W/2 FULL WRAPS OF RUBBER MASTIC TAPE TYPE 3M 130C. FINISH WITH TOP LAYER OF 3 WRAPS OF PVC ELECTRICAL TAPE TYPE 3M #33+
3. LOCATE SOLAR PANEL ON POLE, REFERENCE STANDARD DETAIL SHEET T-06. ORIENT SOUTH INCLINED 30 DEG FROM HORIZONTAL
4. SURGE SUPPRESSION FOR SENSORS SHALL BE LOCATED AS SHOWN ON DRAWINGS.
5. SECURE ANTENNA CABLE WITHIN SUTRON RTU ENCLOSURE WITH ADHESIVE BACKED CABLE MOUNTS.
6. FOR COMPONENT CALL OUT, SEE SHEET T-03 FOR DETAILS
7. FURNISH BONDING JUMPERS, #14 AWG MIN., BETWEEN; DOOR AND ENCLOSURE; ENCLOSURE AND GROUND BAR MOUNTED ON BACK PANEL
8. ALL WORK SHALL BE PERFORMED IN ACCORDANCE WITH THE LATEST EDITION OF THE NATIONAL ELECTRICAL CODE (NEC) AND APPLICABLE LOCAL CODES AND ORDINANCES.
9. NO SUBSTITUTIONS IN REGARDS TO MANUFACTURER AND PART NUMBERS LISTED IN THE RTU SYSTEM COMPONENTS TABLE ARE ALLOWED WITHOUT WRITTEN REQUEST AND GOVERNMENT APPROVAL.
10. ALL CONDUCTORS IN THE PANEL SHALL BE PERMANENTLY IDENTIFIED WITH MACHINE PRINTED WRAP AROUND WIRE MARKERS AT TERMINATION POINTS. PART # BRADY DAT-7-292-1 OR EQUAL.
11. ALL CONDUCTORS EXCEPT FOR INSTRUMENT CABLES SHALL HAVE TYPE MTW OR SIS INSULATION WITH THE FOLLOWING COLOR CODE
   - -12VDC - BLACK
   - +12VDC - RED
   - ALL OTHERS - BLUE
12. WIRING DIAGRAM CONTINUES ON SHEET T-04.

BATTERY CABLE NOTES:

1. PINS FOR #14 TO #20 GAUGE WIRE
2. MALE PINS - MOLEX 02-09-2103-C
3. FEMALE PINS - MOLEX 02-09-1104-C
4. PLUG - MOLEX 03-09-2022P
5. RECEPTACLE - MOLEX 03-09-1022P
6. HEAT SHRINK OVER CABLE/CONNECTOR AFTER ASSY, OVERLAPPING CABLE JACKET AND PLUG CONNECTOR.
7. FURNISH TWO CABLE ASSEMBLIES, THE SPARE CABLE ASSEMBLY SHALL HAVE A RECEPTACLE W/O PINS INSERTED INTO PLUG TO PREVENT SHORTING.
8. LENGTH OF BELDEN 5100UE 5'.
9. LENGTH OF BATTERY LEADS 8".
10. ALL CRIMPED CONNECTIONS IN MOLEX CONNECTORS SHALL BE SOLDERED AFTER CRIMPING.

US Army Corps of Engineers
Jacksonville District

No.	SYM	ZONE	DESCRIPTION

DESIGNED BY: V.L. | DATE: OCTOBER 2015
DWN BY: J.D.H. | CKD BY: J.H.H. | SOLICITATION NO.: W912EP-16-R-0010
SUBMITTED BY: N/A | CONTRACT NO.: N/A
PLOT SCALE: AS SHOWN | PLOT DATE: Apr 25, 2016 | FILE NUMBER: N/A
FILE NAME: 114527-HHDRCRIP3-TS605.DGN

DEPARTMENT OF THE ARMY
CORPS OF ENGINEERS
JACKSONVILLE DISTRICT
JACKSONVILLE, FLORIDA

HERBERT HOOVER DIKE REHABILITATION PROJECT
STRUCTURE REPLACEMENTS
S-291 (IP-3) RECONSTRUCTION
TELECOMMUNICATIONS
SUTRON PANEL WIRING DIAGRAM, SHEET 2

DRAWING NO.
T-05

pw:\\COE-SAJPWP02JAX.saj.ds.usace.army.mil:SAJPW\Documents\C&SF\Herbert Hoover Dike Rehabilitation\03-Culvert Rehabilitation\S-292(IP-1), S-290(IP-2), S-291(IP-3) Culvert Reconstruction\070 - Plans\IP-3\17 Telecommunications\T-05

SAFETY ON THIS JOB DEPENDS ON YOU

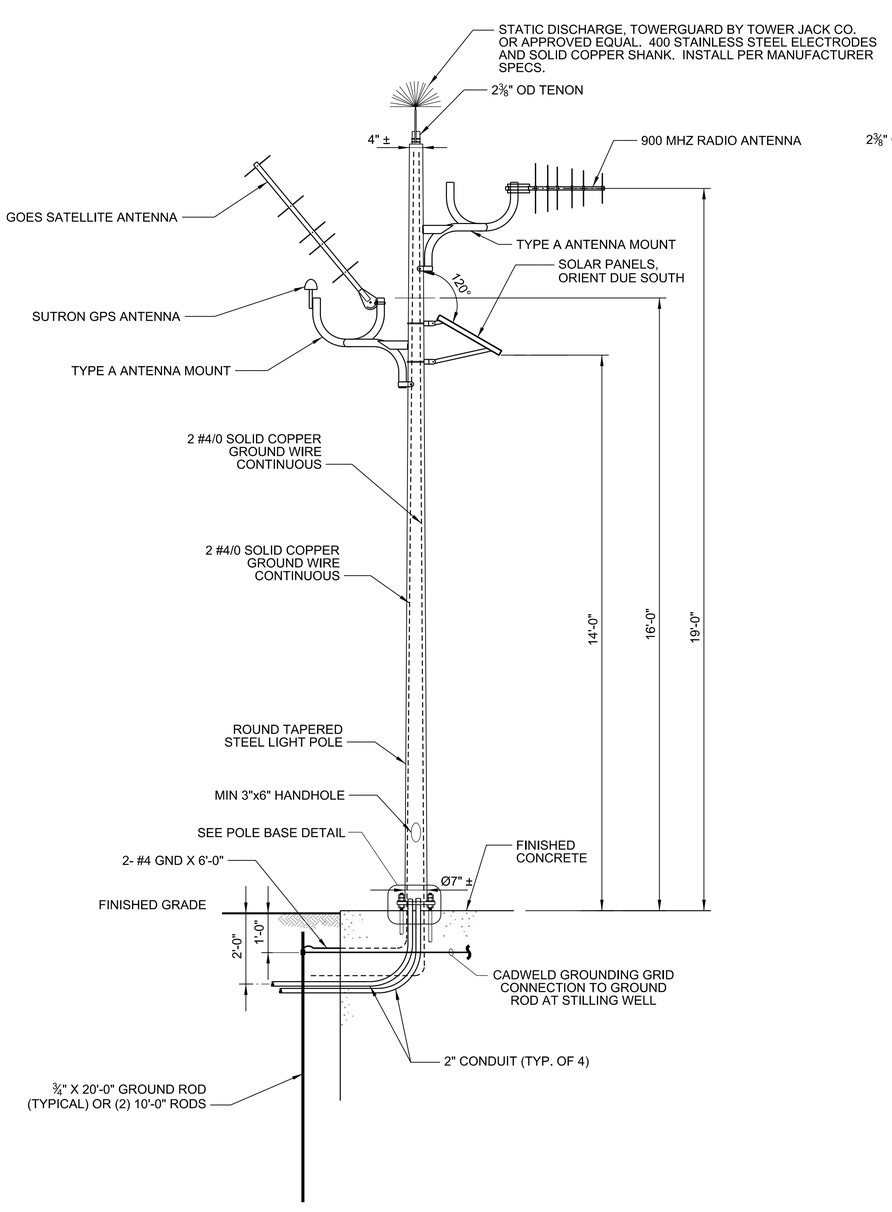

POLE ELEVATION
SCALE: N.T.S.

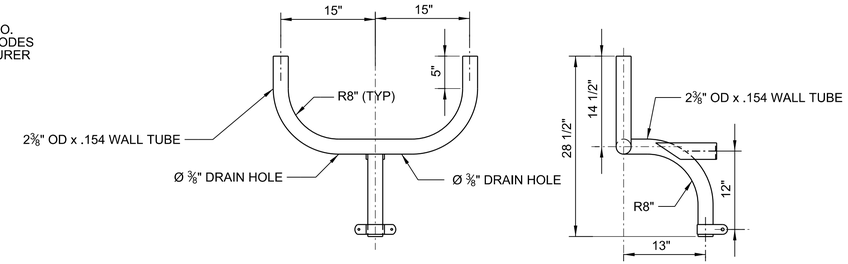

TYPE A ANTENNA MOUNT ASSEMBLY
SCALE: N.T.S.

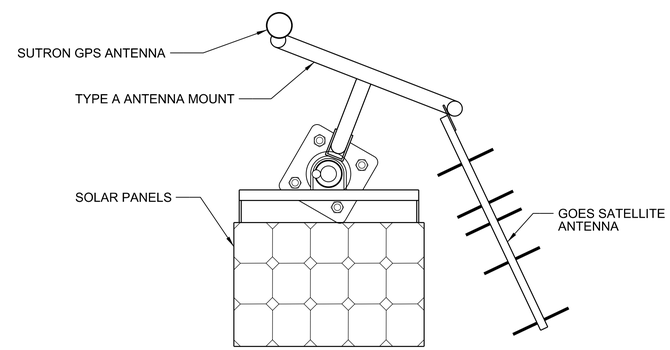

PLAN VIEW
SCALE: N.T.S.

NOTE: SECONDARY TYPE A ANTENNA MOUNT NOT SHOWN FOR CLARITY

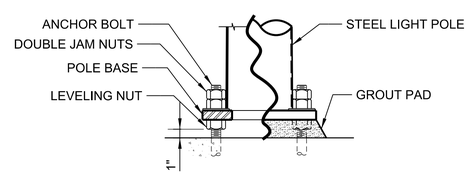

POLE BASE DETAIL
SCALE: N.T.S.

PROVIDE MOUNTING HARWARE SUCH AS ANCHOR BOLTS, LOCKNUTS, AND ETC., POLE STRAP OR ADAPTER, AND OTHER ACCESSORIES FOR PROPER INSTALLATION OF THE ANTENNA AND SOLAR PANEL PER MANUFACTURER'S RECOMMENDATIONS. REFERENCED MANUFACTURERS SHALL BE CONSIDERED "OR APPROVED EQUAL."

NOTES:

1. ALL ELECTRICAL WORK SHALL COMPLY WITH THE LATEST NEC AND NESC REQUIREMENTS.
2. SEE DRAWING S-02 FOR ANTENNA POLE LOCATION.
3. CONTRACTOR SHALL VERIFY ANTENNA POLE DIMENSIONS AND ADJUST ANTENNA ASSEMBLY DIMENSIONS AND ELEVATIONS AS NECESSARY.
4. CONDUIT EXITING POLE SHOULD BE DIRECTED TOWARD CONTROL BUILDING.

US Army Corps of Engineers
Jacksonville District

No.	SYM	ZONE	DESCRIPTION
N	A	A-N	ABCD...

DEPARTMENT OF THE ARMY
CORPS OF ENGINEERS
JACKSONVILLE DISTRICT
JACKSONVILLE, FLORIDA

DESIGNED BY: V.L.	DATE: OCTOBER 2015
DWN BY: J.D.H.	SOLICITATION NO.: W912EP-16-R-0010
CKD BY: J.H.H.	CONTRACT NO.: N/A
SUBMITTED BY: N/A	PLOT SCALE: N/A
PLOT DATE: Apr 25, 2016	FILE NUMBER: N/A
FILE NAME: 114527-HHDRCRIP3-TS506.DGN	

HERBERT HOOVER DIKE REHABILITATION PROJECT
STRUCTURE REPLACEMENTS

S-291 (IP-3) RECONSTRUCTION

TELECOMMUNICATIONS

ANTENNA POLE DETAILS

DRAWING NO.

T-06

pw:\\COE-SAJPWP02JAX.saj.ds.usace.army.mil:SAJPW\Documents\C&SF\Herbert Hoover Dike Rehabilitation\03-Culvert Rehabilitation\S-292(IP-1), S-290(IP-2), S-291(IP-3) Culvert Reconstruction\070 - Plans\IP-3\17 Telecommunications\T-06

SAFETY ON THIS JOB DEPENDS ON YOU

POLE AND WINCH MATERIAL SPECIFICATIONS:

POLE SHAFT - COMM. GRADE STEEL, 55 K.S.I. MINIMUM YIELD.
BASE PLATE - ASTM A-36, 36 K.S.I. MINIMUM YIELD.
HANDHOLE RING - ASTM A-36, 36 K.S.I. MIN. YIELD.
ANCHOR BOLTS - ASTM F1554, 55 K.S.I. MIN. YIELD.

ENTIRE STANDARD TO BE HOT DIP GALVANIZED
IN ACCORDANCE WITH ASTM A-123 AND COATED
IN ACCORDANCE WITH KW INDUSTRIES COATING STANDARDS.

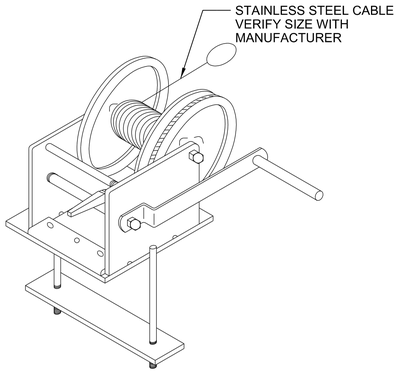

LOWERING WINCH - TYPICAL
SCALE: N.T.S.

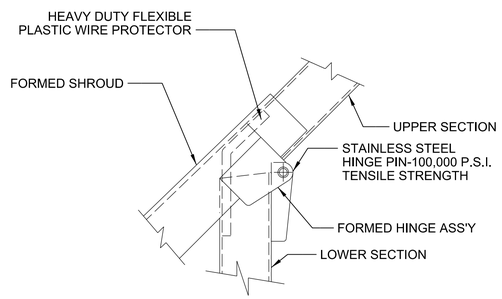

HINGE POINT DETAIL
SCALE: N.T.S.

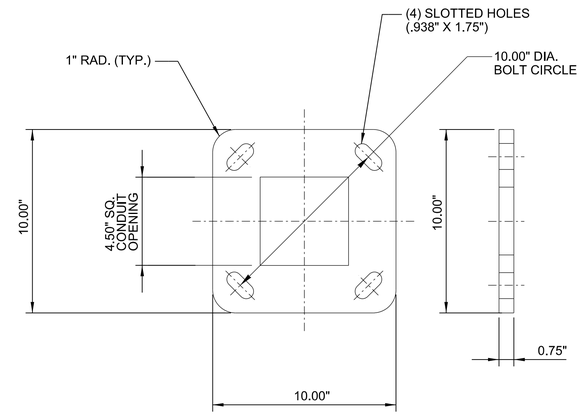

BASE PLATE DETAIL
SCALE: N.T.S.

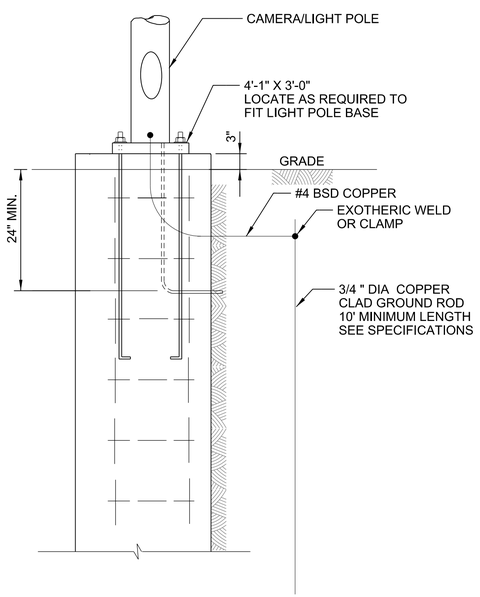

POLE BASE DETAIL - TYPICAL
SCALE: N.T.S.

VERIFY SIZE OF ANCHOR BOLTS WITH
MANUFACTURER OF LIGHT POLES.

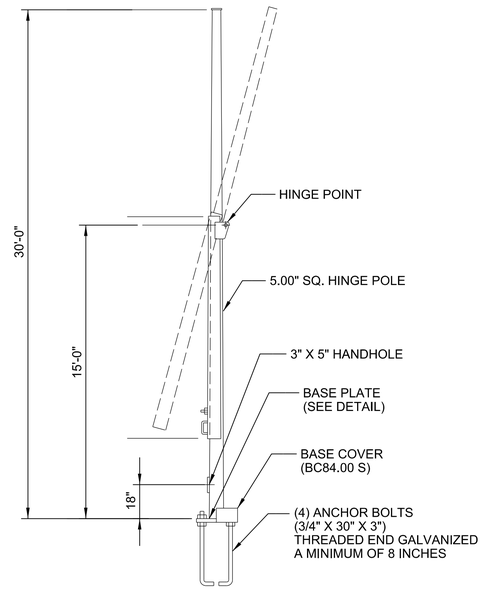

CAMERA POLE
SCALE: N.T.S.

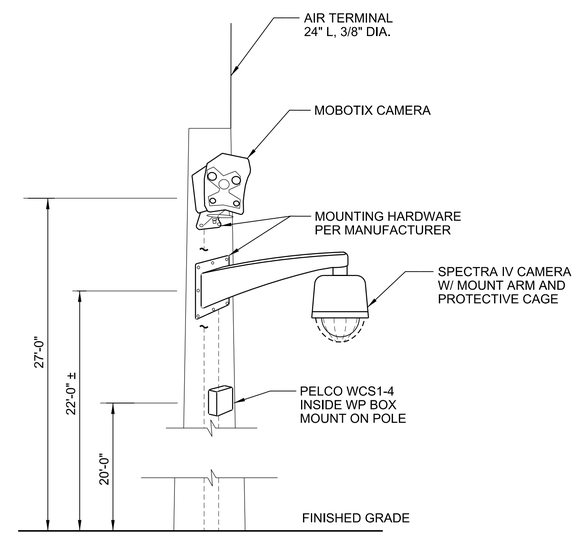

CAMERA MOUNTING ELEVATION
SCALE: N.T.S.

PROVIDE MOUNTING HARWARE SUCH AS ANCHOR BOLTS, LOCKNUTS, AND ETC., POLE STRAP OR ADAPTER, AND OTHER ACCESSORIES FOR PROPER INSTALLATION OF THE CAMERAS PER MANUFACTURER'S RECOMMENDATIONS. REFERENCED MANUFACTURERS SHALL BE CONSIDERED "OR APPROVED EQUAL."

US Army Corps of Engineers
Jacksonville District

No.	SYM	ZONE	DESCRIPTION

DEPARTMENT OF THE ARMY
CORPS OF ENGINEERS
JACKSONVILLE DISTRICT
JACKSONVILLE, FLORIDA

DESIGNED BY: V.L.
DATE: OCTOBER 2015
DWN BY: J.D.H.
CKD BY: J.H.H.
SOLICITATION NO.: W912EP-16-R-0010
SUBMITTED BY: N/A
CONTRACT NO.: N/A
PLOT SCALE: N/A
PLOT DATE: Apr 25, 2016
FILE NUMBER: N/A
FILE NAME: 114527-HHDRCRIP3-TS507.DGN

HERBERT HOOVER DIKE REHABILITATION PROJECT
STRUCTURE REPLACEMENTS

S-291 (IP-3) RECONSTRUCTION

TELECOMMUNICATIONS

CAMERA POLE DTAILS

DRAWING NO.
T-07

pw:\\COE-SAJ\PWP02\JAX.saj.ds.usace.army.mil:SAJ\PW\Documents\C&SP\Herbert Hoover Dike Rehabilitation\03-Culvert Rehabilitation\S-292(IP-1), S-290(IP-2), S-291(IP-3) Culvert Reconstruction\070 - Plans\IP-3\17 Telecommunications\T-07

SAFETY ON THIS JOB DEPENDS ON YOU

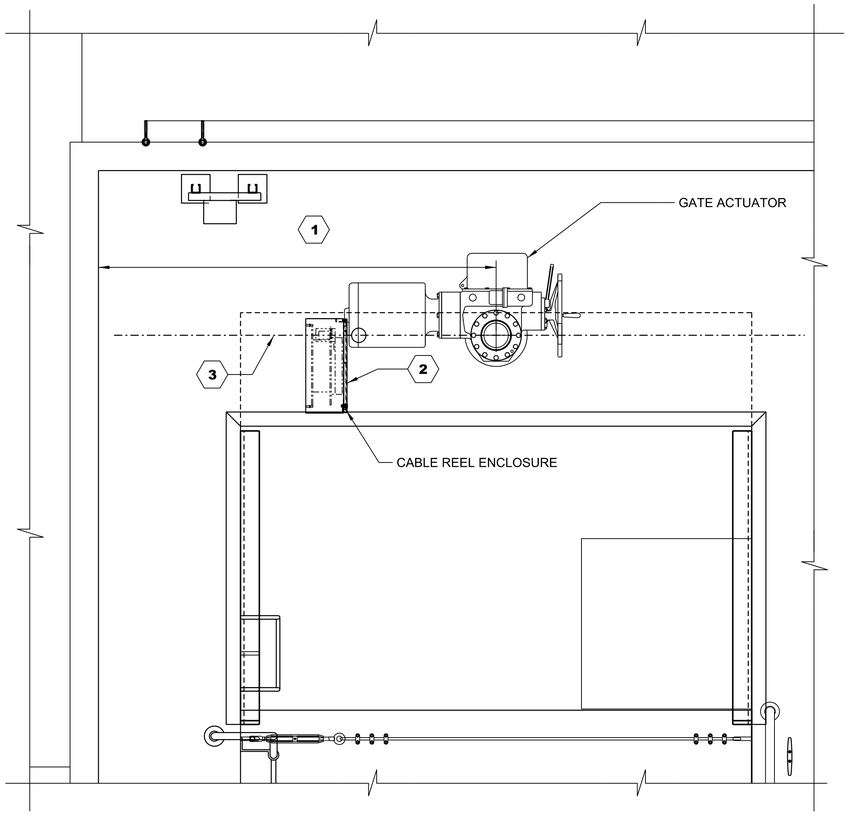

INCLINOMETER PLAN
SCALE: C

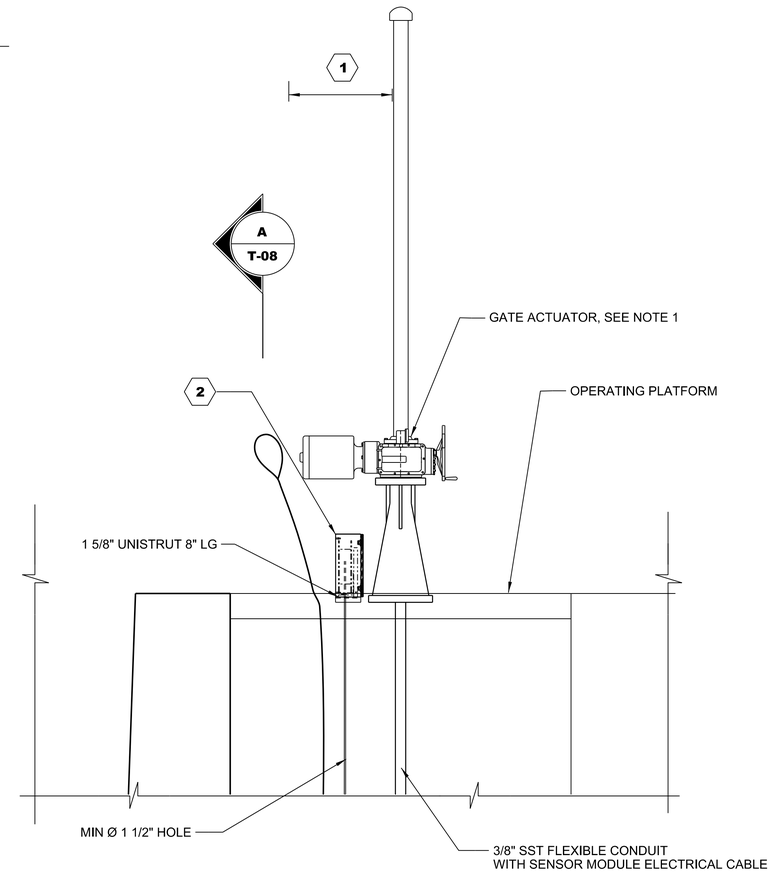

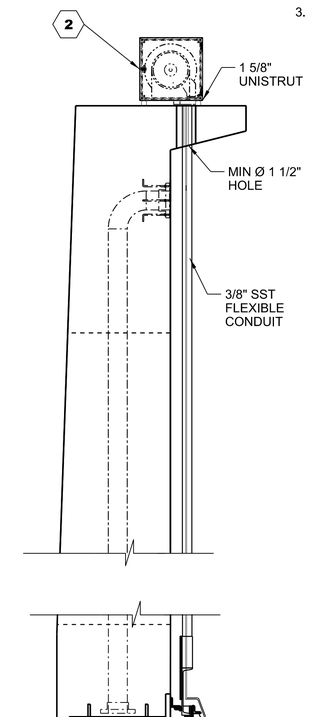

NOTES:

1. COMBINATION GATE SHOWN IS ONLY A CONCEPTUAL REPRESENTATION AND MAY NOT ACCURATELY SHOW THE ITEM(S) ACTUALLY INSTALLED. CONTRACTOR SHALL COORDINATE LOCATION AND MOUNTING OF GATE POSITION SENSORS WITH THE GATE MANUFACTURER.
2. INCLINOMETER SHALL BE INSTALLED WITH THE +X AXIS FACING AND PERPINDICULAR TO THE FLAP GATE SKIN PLATE.
3. CONTRACTOR SHALL ENSURE THE INCLINOMETER DOES NOT ROTATE, SLIDE, SPIN, OR OTHERWISE MOVE ON ITS' X, Y, AND Z AXIS ONCE IT IS INSTALLED IN THE MK T-09-1 SENSOR HOUSING WITH BOTH PIPE CAPS INSTALLED.

KEY NOTES:

1 INCLINOMETER CABLE REEL ENCLOSURE SHALL BE MOUNTED ON SIDE OF GATE ACTUATOR OPPOSITE OF HAND CRANK.

2 CABLE REEL ENCLOSURE ASSEMBLY. SEE SPECIFICATIONS FOR DESCRIPTION.

3 THE GATE ACTUATOR STEM AND INCLINOMETER CABLE SHALL BE CENTERED ON THE SAME ALIGNMENT.

4 INCLINOMETER SHALL BE INSTALLED WITHIN THIS QUADRANT OF THE FLAP GATE. CONTRACTOR SHALL COORDINATE THE SPECIFIC LOCATION AND ORIENTATION OF THE INCLINOMETER WITH THE GATE MANUFACTURER.

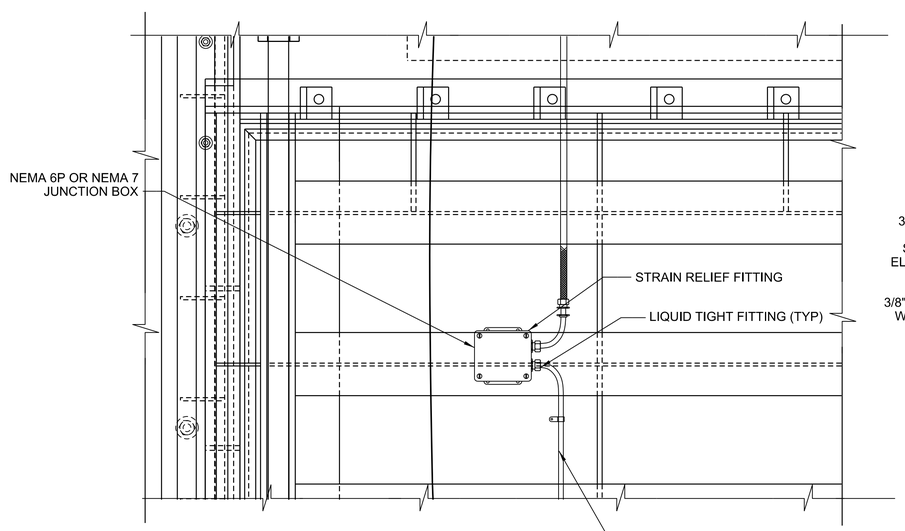

1 / T-08 DETAIL
SCALE: B

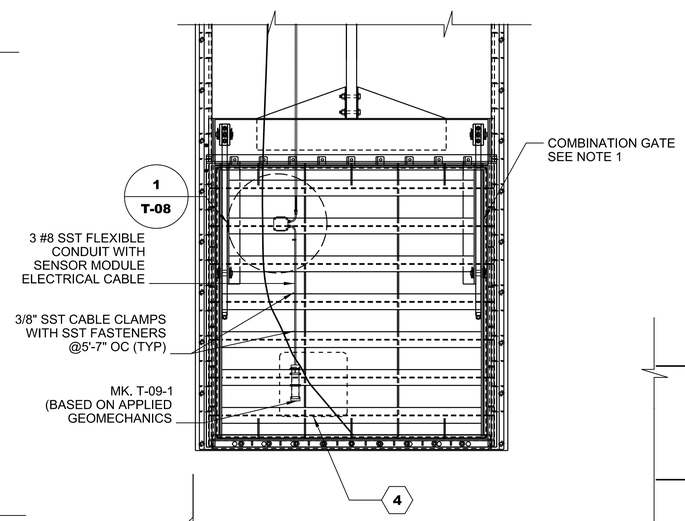

A / T-08 FRONT ELEVATION
SCALE: A

A / T-08 SECTION
SCALE: A

"A" 1' 0 1' 2'
"B" 12" 9" 6" 3" 0 1'
"C" 0 3" 6" 12"

US Army Corps of Engineers
Jacksonville District

No.	SYM	ZONE	DESCRIPTION

DEPARTMENT OF THE ARMY
CORPS OF ENGINEERS
JACKSONVILLE DISTRICT
JACKSONVILLE, FLORIDA

DESIGNED BY: V.L.
DWN BY: J.D.H.
CKD BY: J.H.H.
SUBMITTED BY: N/A
PLOT SCALE: AS SHOWN
PLOT DATE: Apr 25, 2016
DATE: OCTOBER 2015
SOLICITATION NO.: W912EP16-R-0010
CONTRACT NO.: N/A
FILE NUMBER: N/A
FILE NAME: 114527-HHDRCRIP3-TS508.DGN

HERBERT HOOVER DIKE REHABILITATION PROJECT
STRUCTURE REPLACEMENTS
S-291 (IP-3) RECONSTRUCTION
TELECOMMUNICATIONS
INCLIMOMETER INSTALLATION DETAILS

DRAWING NO.
T-08

pw:\\COE-SAJPW\P02JAX.saj.ds.usace.army.mil:SAJPW\Documents\C&SF\Herbert Hoover Dike Rehabilitation\03-Culvert Rehabilitation\S-292(IP-1), S-290(IP-2), S-291(IP-3) Culvert Reconstruction\070 - Plans\IP-3\17 Telecommunications\T-08

SAFETY ON THIS JOB DEPENDS ON YOU

NOTES:

1. COMBINATION GATE SHOWN IS ONLY A CONCEPTUAL REPRESENTATION AND MAY NOT ACCURATELY SHOW THE ITEM(S) ACTUALLY INSTALLED. CONTRACTOR SHALL COORDINATE LOCATION AND MOUNTING OF GATE POSITION SENSORS WITH THE GATE MANUFACTURER.
2. INCLINOMETER SHALL BE INSTALLED WITH THE +X AXIS FACING AND PERPINDICULAR TO THE FLAP GATE SKIN PLATE.
3. PART NUMBERS FOR INCLINOMETER ARE BASED ON APPLIED GEOMECHANICS.
4. CONTRACTOR SHALL ENSURE THE INCLINOMETER DOES NOT ROTATE, SLIDE, SPIN, OR OTHERWISE MOVE ON ITS' X, Y, AND Z AXIS ONCE IT IS INSTALLED IN THE MK T-09-1 SENSOR HOUSING WITH BOTH PIPE CAPS INSTALLED.

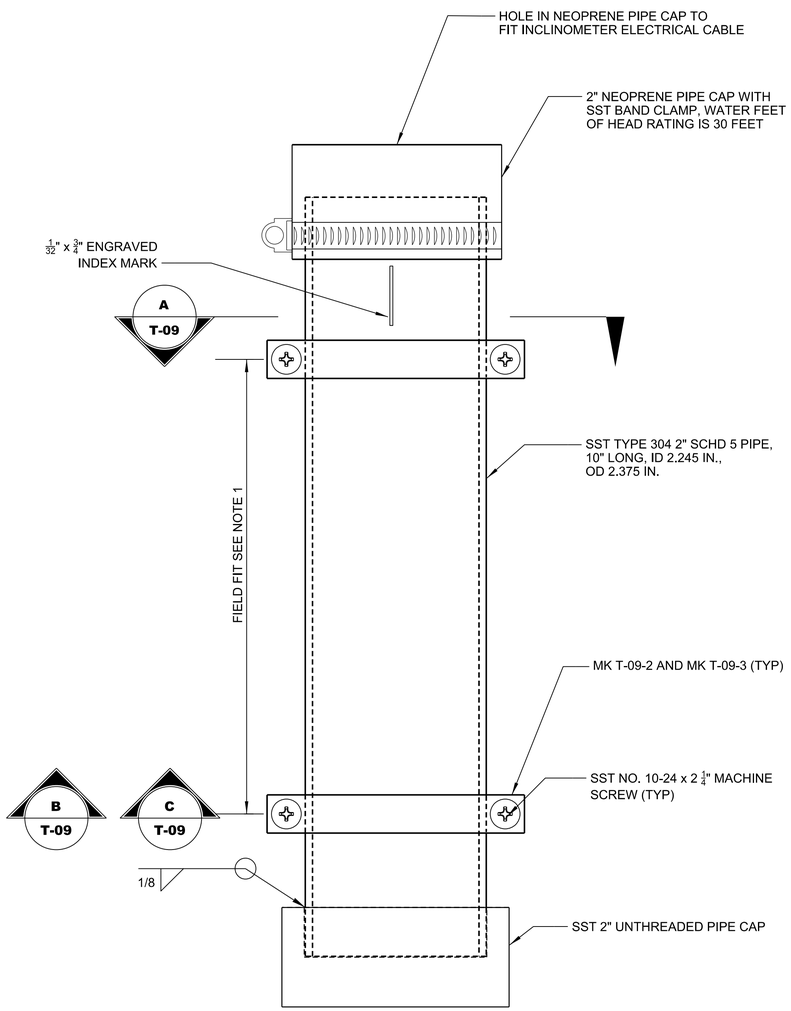

PLAN
SCALE: A

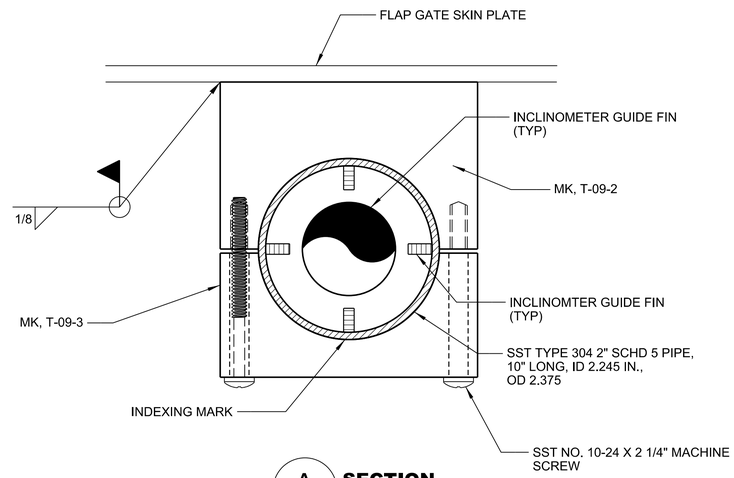

A T-09 **SECTION**
SCALE: N.T.S.

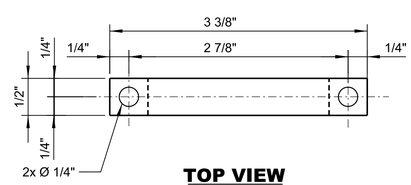

TOP VIEW
SCALE: N.T.S.

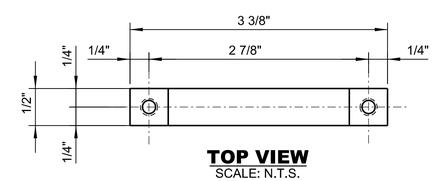

TOP VIEW
SCALE: N.T.S.

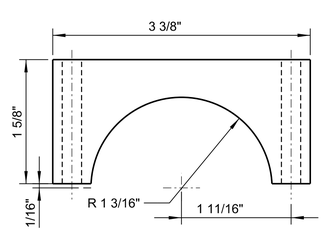

B T-09 **SECTION VIEW**
SCALE: N.T.S.

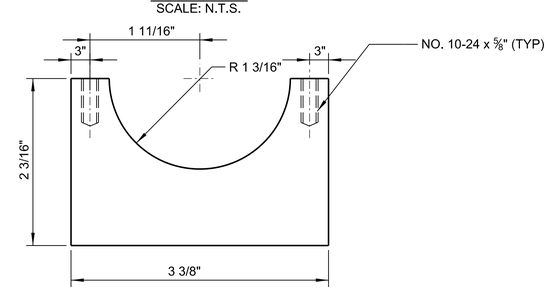

C T-09 **SECTION VIEW**
SCALE: N.T.S.

INCLINOMETER HOUSEING M.K. T-09-1
MATL: TYPE ASTM A 572, GR 50 1 REQ'D.

TOP CLAMP PORTION M.K. T-09-3
MATL: TYPE 304 SST 2 REQ'D.

CLAMP BASE M.K. T-09-2
MATL: TYPE 304 SST 2 REQ'D.

US Army Corps of Engineers, Jacksonville District

No.	SYM	ZONE	DESCRIPTION

DEPARTMENT OF THE ARMY
CORPS OF ENGINEERS
JACKSONVILLE DISTRICT
JACKSONVILLE, FLORIDA

DESIGNED BY: V.L.
DWN BY: J.D.H.
CKD BY: S.J.P.
SUBMITTED BY: N/A
PLOT SCALE: AS SHOWN
PLOT DATE: Apr 25, 2014
DATE: OCTOBER 2015
SOLICITATION NO.: W912EP-16-R-0010
CONTRACT NO.: N/A
FILE NUMBER: N/A
FILE NAME: 114527-HHDRCRIP3-TS509.DGN

HERBERT HOOVER DIKE REHABILITATION PROJECT
STRUCTURE REPLACEMENTS
S-291 (IP-3) RECONSTRUCTION
TELECOMMUNICATIONS
INCLINOMETER DETAILS

DRAWING NO.
T-09

pw:\\COE-SAJPWP02JAX.saj.ds.usace.army.mil:SAJPW\Documents\C&SF\Herbert Hoover Dike Rehabilitation\03-Culvert Rehabilitation\S-292(IP-1), S-290(IP-2), S-291(IP-3) Culvert Reconstruction\070 - Plans\IP-3\17 Telecommunications\T-09

SAFETY ON THIS JOB DEPENDS ON YOU

NOTES:

1. MATERIAL IS 300 SERIES STANLESS STEEL.
2. DRAWING SHOWN IS CONCEPT DRAWING. DESIGN AND FABRICATE BRACKET FOR GE MDS INET-II 900 RADIO.

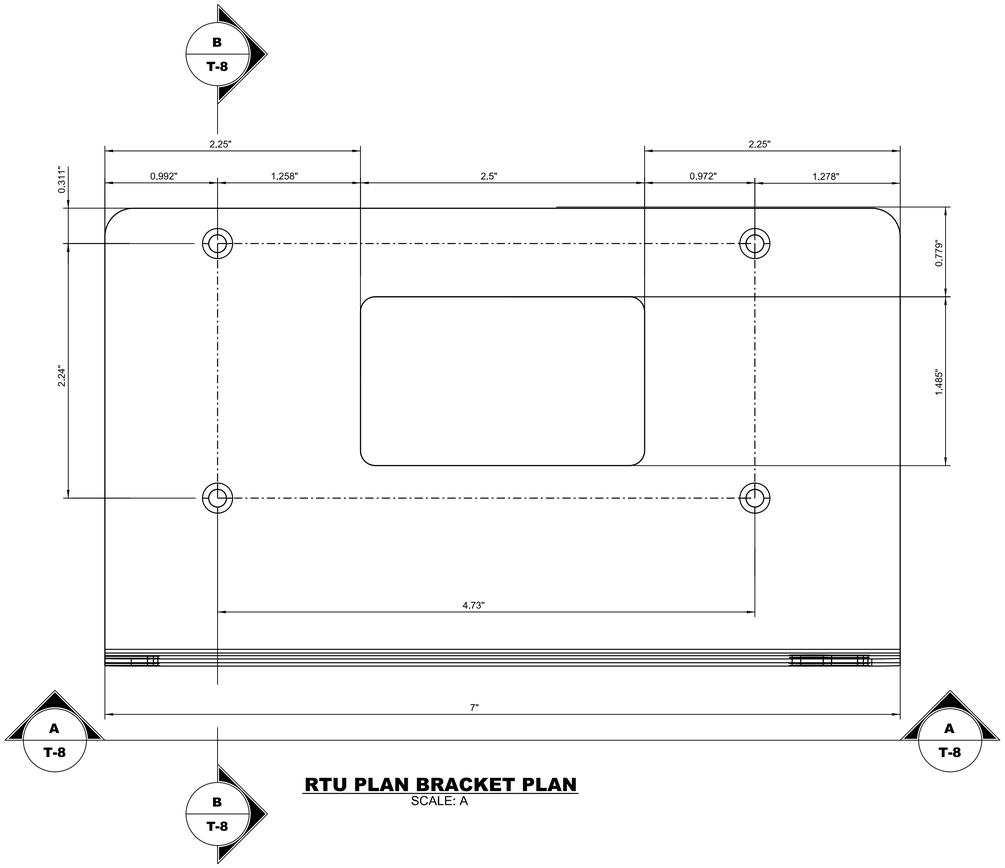

RTU PLAN BRACKET PLAN
SCALE: A

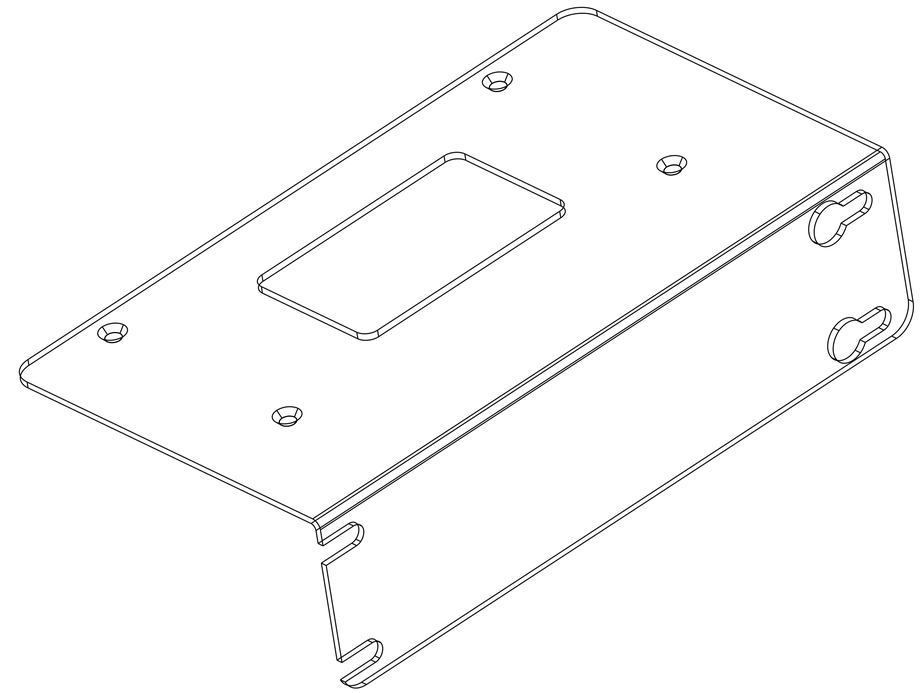

RTU RADIO BRACKET ISOMETRIC
SCALE: A

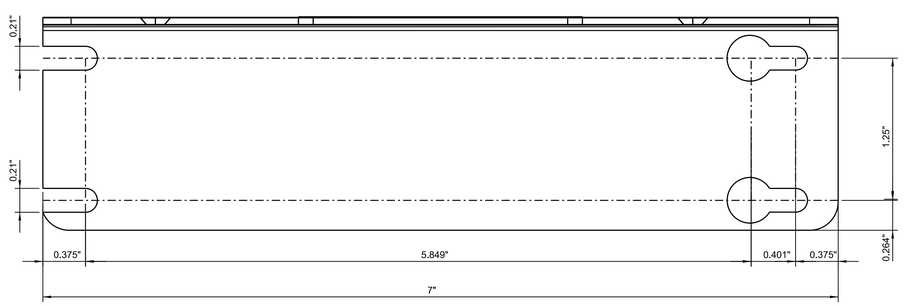

ELEVATION A
SCALE: A

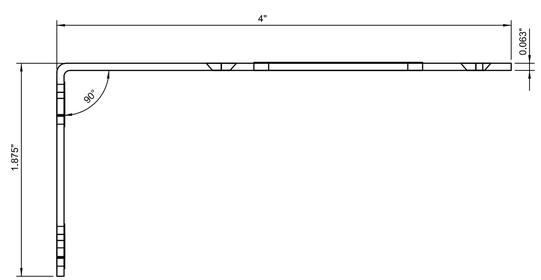

B T-8 **SECTION**
SCALE: A

"A" 1" 3/4" 1/2" 1/4" 0 1"

US Army Corps of Engineers
Jacksonville District

No.	SYM	ZONE	DESCRIPTION

DEPARTMENT OF THE ARMY
CORPS OF ENGINEERS
JACKSONVILLE DISTRICT
JACKSONVILLE, FLORIDA

DESIGNED BY: V.L.
DWN BY: J.D.H.
CKD BY: J.H.H.
SUBMITTED BY: N/A
DATE: OCTOBER 2015
SOLICITATION NO.: W912EP-16-R-0010
CONTRACT NO.: N/A
PLOT SCALE: As shown
PLOT DATE: Apr 25, 2016
FILE NUMBER: N/A
FILE NAME: 114527-HHDRCRIP3-TS508.DGN

HERBERT HOOVER DIKE REHABILITATION PROJECT
STRUCTURE REPLACEMENTS

S-291 (IP-3) RECONSTRUCTION

TELECOMMUNICATIONS

RTU RADIO BRACKET

DRAWING NO.

T-10

pw:\\COE-SAJ\PWP02\JAX.saj.ds.usace.army.mil:SAJPW\Documents\C&SF\Herbert Hoover Dike Rehabilitation\03-Culvert Rehabilitation\S-292(IP-1), S-290(IP-2), S-291(IP-3) Culvert Reconstruction\070 - Plans\IP-3\17 Telecommunications\T-10

SAFETY ON THIS JOB DEPENDS ON YOU

NOTES:

1. THREE-QUARTER SIZED DRAWING SHOWN IS A CONTRACT DRAWING FROM A PREVIOUS PROJECT(S) AND MAY NOT REPRESENT CURRENT CONDITIONS. THIS DRAWING IS INCLUDED FOR REFERENCE ONLY. THIS REFERENCE DRAWING IS NOT TO SCALE AND SHALL NOT BE USED TO DETERMINE LINEAR OR ANGULAR MEASUREMENTS. THE CONTRACTOR IS RESPONSIBLE FOR VERIFYING REFERENCE DRAWING INFORMATION USED DURING THE PERFORMANCE OF THIS CONTRACT. ALL KEY NOTES, GENERAL NOTES, AND NEW DETAILS SHOWN BESIDE OR BELOW THE REFERENCE DRAWING SHALL APPLY TO THIS CONTRACT.

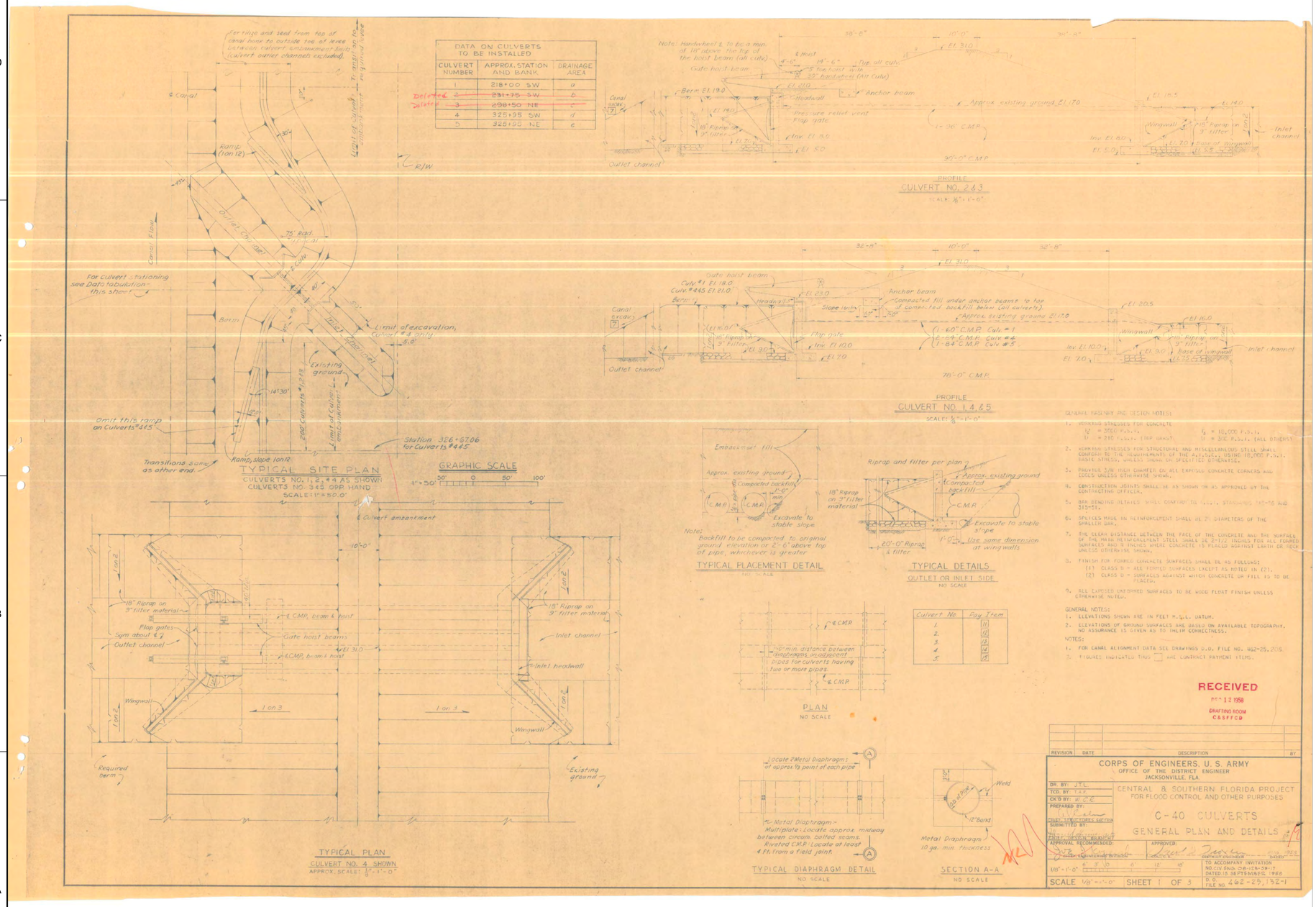

US Army Corps of Engineers, Jacksonville District

No.	SYM	ZONE	DESCRIPTION
N	A-N	ABCD...	

DEPARTMENT OF THE ARMY
CORPS OF ENGINEERS
JACKSONVILLE DISTRICT
JACKSONVILLE, FLORIDA

DESIGNED BY: C.B.G.	DATE: JULY 2015
DWN BY: W.E.S.	CKD BY: G.J.L.
SOLICITATION NO.: W912EP-16-R-0010	
SUBMITTED BY: N/A	CONTRACT NO.: N/A
PLOT SCALE: 1:1	PLOT DATE: Apr 25, 2014
FILE NUMBER: N/A	
FILE NAME: 114527-HHDRCRIP3-R-01.DGN	

HERBERT HOOVER DIKE REHABILITATION PROJECT
STRUCTURE REPLACEMENTS

S-291 (IP-3) RECONSTRUCTION

RESOURCE

HP_Culverts_Sheet_1_DO_463-25,182-1

DRAWING NO.

R-01

pw:\\COE-SAJ\PWP02\JAX.saj.ds.usace.army.mil:SAJ\PW\Documents\C&SF\Herbert Hoover Dike Rehabilitation\03-Culvert Reconstruction\070 - Plans\IP-3\18 Resources\R-01

billitation\S-292(IP-1), S-290(IP-2), S-291(IP-3) Culvert Reconstruction\070 - Plans\IP-3\18 Resources\R-01

SAFETY ON THIS JOB DEPENDS ON YOU

NOTES:

1. THREE-QUARTER SIZED DRAWING SHOWN IS A CONTRACT DRAWING FROM A PREVIOUS PROJECT(S) AND MAY NOT REPRESENT CURRENT CONDITIONS. THIS DRAWING IS INCLUDED FOR REFERENCE ONLY. THIS REFERENCE DRAWING IS NOT TO SCALE AND SHALL NOT BE USED TO DETERMINE LINEAR OR ANGULAR MEASUREMENTS. THE CONTRACTOR IS RESPONSIBLE FOR VERIFYING REFERENCE DRAWING INFORMATION USED DURING THE PERFORMANCE OF THIS CONTRACT. ALL KEY NOTES, GENERAL NOTES, AND NEW DETAILS SHOWN BESIDE OR BELOW THE REFERENCE DRAWING SHALL APPLY TO THIS CONTRACT.

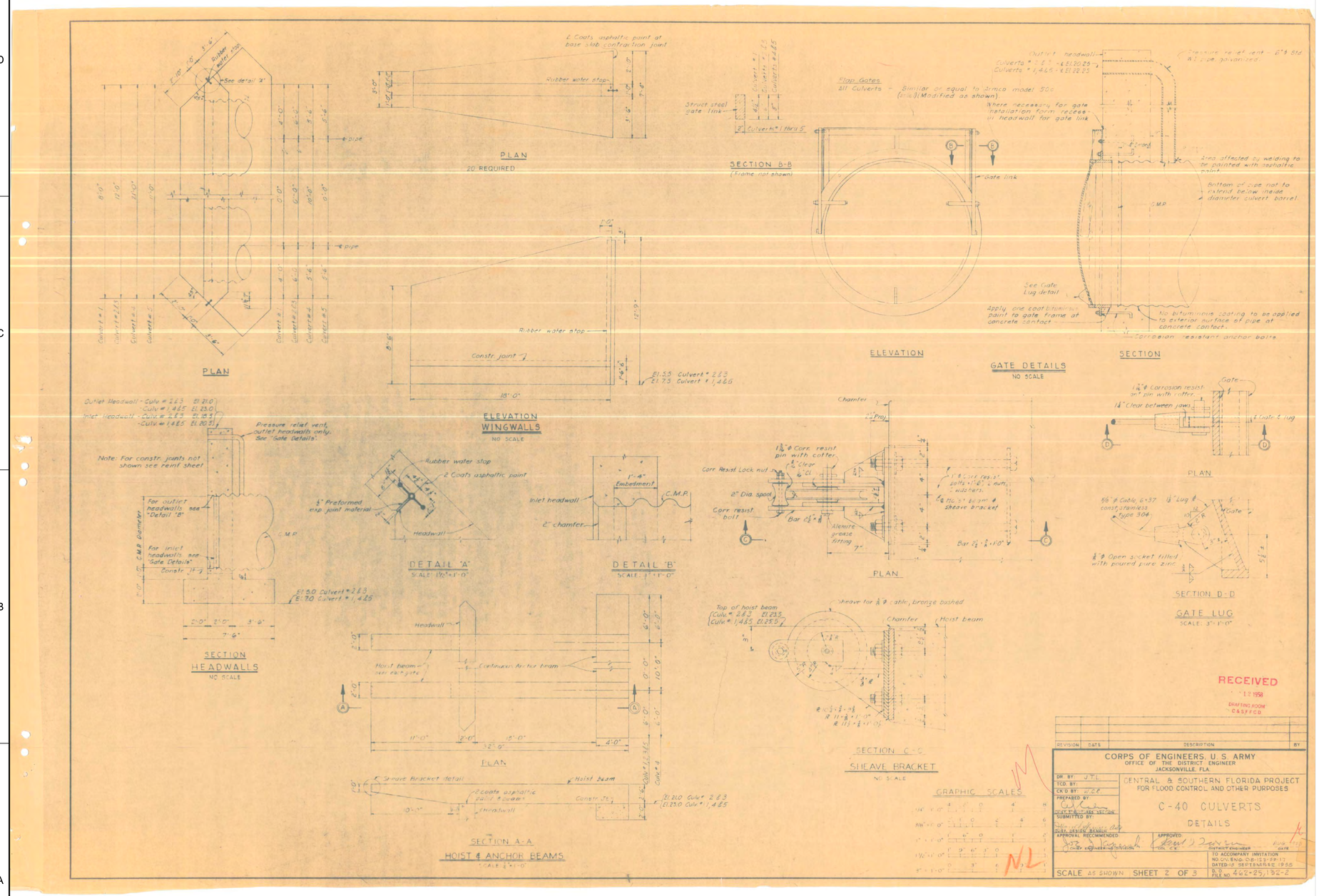

US Army Corps of Engineers, Jacksonville District

No.	SYM	ZONE	DESCRIPTION
N	A-N	ABCD...	

DESIGNED BY: C.B.G.
DWN BY: W.E.S.
CKD BY: G.J.L.
SUBMITTED BY: N/A
SCALE: N/A
PLOT DATE: Apr 25, 2014
FILE NUMBER: N/A
FILE NAME: 114527-HHDRCRIP3-R-02.DGN

DATE: JULY 2015
SOLICITATION NO.: W912EP-16-R-0010
CONTRACT NO.: N/A

DEPARTMENT OF THE ARMY
CORPS OF ENGINEERS
JACKSONVILLE DISTRICT
JACKSONVILLE, FLORIDA

HERBERT HOOVER DIKE REHABILITATION PROJECT
STRUCTURE REPLACEMENTS

S-291 (IP-3) RECONSTRUCTION

RESOURCE

HP_Culverts_Sheet_2_DO_463-25,182-1

DRAWING NO.

R-02

pw:\\COE-SAJ\PW\P02JAX.saj.ds.usace.army.mil:SAJ\PW\Documents\C&SF\Herbert Hoover Dike Rehabilitation\03-Culvert Reconstruction\070 - Plans\IP-3\18 Resources\R-02

S-292(IP-1), S-290(IP-2), S-291(IP-3) Culvert Reconstruction\070 - Plans\IP-3\18 Resources\R-02

SAFETY ON THIS JOB DEPENDS ON YOU

NOTES:

1. THREE-QUARTER SIZED DRAWING SHOWN IS A CONTRACT DRAWING FROM A PREVIOUS PROJECT(S) AND MAY NOT REPRESENT CURRENT CONDITIONS. THIS DRAWING IS INCLUDED FOR REFERENCE ONLY. THIS REFERENCE DRAWING IS NOT TO SCALE AND SHALL NOT BE USED TO DETERMINE LINEAR OR ANGULAR MEASUREMENTS. THE CONTRACTOR IS RESPONSIBLE FOR VERIFYING REFERENCE DRAWING INFORMATION USED DURING THE PERFORMANCE OF THIS CONTRACT. ALL KEY NOTES, GENERAL NOTES, AND NEW DETAILS SHOWN BESIDE OR BELOW THE REFERENCE DRAWING SHALL APPLY TO THIS CONTRACT.

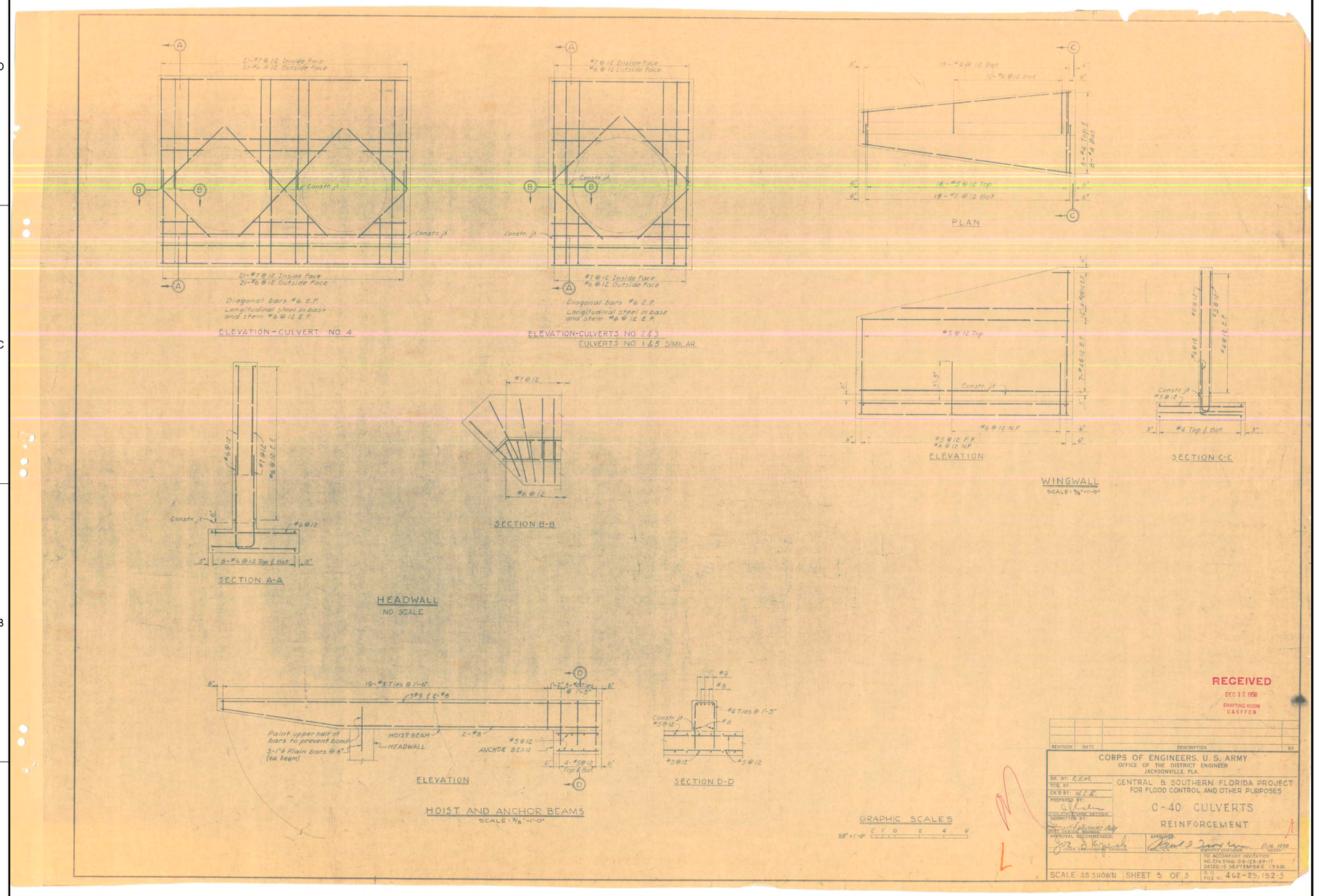

US Army Corps of Engineers, Jacksonville District

No.	SYM	ZONE	DESCRIPTION
N	A-N	ABCD...	

DEPARTMENT OF THE ARMY
CORPS OF ENGINEERS
JACKSONVILLE DISTRICT
JACKSONVILLE, FLORIDA

DESIGNED BY: C.B.G.	DATE: JULY 2015
DWN BY: W.E.S.	CKD BY: G.J.L.
SOLICITATION NO.: W912EP-16-R-0010	
SUBMITTED BY: N/A	CONTRACT NO.: N/A
PLOT SCALE: As Shown	PLOT DATE: Apr 25, 2014
FILE NUMBER: N/A	
FILE NAME: 114527-HHDRCRIP3-R-03.DGN	

HERBERT HOOVER DIKE REHABILITATION PROJECT
STRUCTURE REPLACEMENTS

S-291 (IP-3) RECONSTRUCTION

RESOURCE

HP_Culverts_Sheet_3_DO_463-25,182-1

DRAWING NO.

R-03

pw:\\COE-SAJ\PWP02\JAX.saj.ds.usace.army.mil:SAJ\PW\Documents\C&SF\Herbert Hoover Dike Rehabilitation\03-Culvert Rehabilitation\S-292(IP-1), S-290(IP-2), S-291(IP-3) Culvert Reconstruction\070 - Plans\IP-3\18 Resources\R-03